BlueNRG-LPS

Datasheet

Programmable Bluetooth® LE wireless SoC



VFQFPN32 (5 x 5 mm)

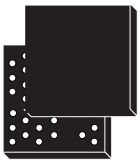

WLCSP36 (2.652 x 2.592 mm)

Product status link
BlueNRG-LPS

Product summary	
Order code	BlueNRG-332xy

Features

- Bluetooth® Low Energy system-on-chip supporting Bluetooth 5.3 specifications
  - 2 Mbps data rate
  - Long range (Coded PHY)
  - Advertising extensions
  - Channel selection algorithm #2
  - GATT caching
  - Direction finding (AoA/AoD)
  - LE ping procedure
  - Periodic advertising and periodic advertising sync transfer
  - LE L2CAP connection-oriented channel
  - LE power control and path loss monitoring
- Radio
  - RX sensitivity level: -97 dBm @ 1 Mbps, -104 dBm @ 125 kbps (long range)
  - Programmable output power up to +8 dBm (at antenna connector)
  - Data rate supported: 2 Mbps, 1 Mbps, 500 kbps and 125 kbps
  - 128 physical connections
  - Integrated balun
  - Support for external PA and LNA
  - BlueNRG core coprocessor (DMA based) for Bluetooth Low Energy timing critical operation
  - 2.4 GHz proprietary radio driver
  - Suitable for systems requiring compliance with the following radio frequency regulations: ETSI EN 300 328, EN 300 440, FCC CFR47 part 15, ARIB STD-T66
  - Available integrated passive device (IPD) companion chip for optimized matching and filtering
- Ultra-low power radio performance
  - 8 nA in SHUTDOWN mode (1.8 V)
  - 0.8 µA in DEEPSTOP mode (with external LSE and BLE wake-up sources, 1.8 V)
  - 1.0 µA in DEEPSTOP mode (with internal LSI and BLE wake-up sources, 1.8 V)
  - 4.3 mA peak current in TX (@ 0 dBm, 3.3 V)
  - 3.4 mA peak current in RX (@ sensitivity level, 3.3V)
- High performance and ultra-low power Arm® Cortex®-M0+ 32-bit, running up to 64 MHz
- Dynamic current consumption: 14 µA/MHz
- Operating supply voltage: from 1.7 to 3.6 V
- -40 °C to 105 °C temperature range
- Supply and reset management
  - High efficiency embedded SMPS step-down converter with intelligent bypass mode
  - Ultra-low power power-on-reset (POR) and power-down-reset (PDR)
  - Programmable voltage detector (PVD)

- Clock sources
  - 64 MHz PLL
  - Fail safe 32 MHz crystal oscillator with integrated trimming capacitors
  - 32 kHz crystal oscillator
  - Internal low-power 32 kHz RO
- On-chip non-volatile flash memory of 192 Kbytes
- On-chip RAM of 24 Kbytes + 4 Kbytes PKA RAM
- One-time-programmable (OTP) memory area of 1 Kbytes
- Embedded UART bootloader
- Ultra-low power modes with or without timer and RAM retention
- Quadrature decoder
- Enhanced security mechanisms such as:
  - Flash read/write protection
  - SWD disabling
  - Secure bootloader
- Security features
  - True random number generator (RNG)
  - Hardware encryption AES maximum 128-bit security co-processor
  - HW public key accelerator (PKA)
  - Cryptographic algorithms: RSA, Diffie-Helman, ECC over GF(p)
  - CRC calculation unit
  - 64-bit unique ID
- System peripherals
  - 1x DMA controller with 8 channels supporting ADC, SPI-I2S, I2C, USART, LPUART, TIMERS
  - 1x SPI with I2S interface multiplexed
  - 1x I^2C (SMBus/PMBus)
  - 1x LPUART (low power)
  - 1x USART (ISO 7816 smartcard mode, IrDA, SPI Master and Modbus)
  - 1x independent WDG
  - 1x real-time clock (RTC)
  - 1x independent SysTick
  - 1x 16-bits, four channel general purpose timer
  - 2x 16-bits, two channel general purpose timer
  - Infrared interface
- Up to 20 fast I/Os
  - All of them with wake-up capability
  - All of them retain state in low-power
- Analog peripherals
  - 12-bit ADC with 8 input channels, up to 16 bits with down sampler
  - Battery monitoring
  - Analog watchdog
- Development support
  - Serial wire debug (SWD)
  - 4 breakpoints and 2 watchpoints
- All packages are ECOPACK2 compliant

Applications

- Industrial

- Home and industrial automation
- Asset tracking, ID location, real-time locating system
- Smart lighting
- Fitness,wellness and sports
- Healthcare, consumer medical
- Security/proximity
- Remote control
- Assisted living
- Mobile phone peripherals
- PC peripherals

Description

The BlueNRG-LPS is an ultra-low power programmable Bluetooth® Low Energy wireless SoC solution. It embeds STMicroelectronics's state-of-the-art 2.4 GHz radio IPs, optimized for ultra-low-power consumption and excellent radio performance, for unparalleled battery lifetime. It is compliant with Bluetooth Low Energy SIG core specification version 5.3 addressing point-to-point connectivity and Bluetooth Mesh networking and allows large-scale device networks to be established in a reliable way. The BlueNRG-LPS is also suitable for 2.4 GHz proprietary radio wireless communication to address ultra-low latency applications.

The BlueNRG-LPS embeds a Arm® Cortex®-M0+ microcontroller that can operate up to 64 MHz and also the BlueNRG core co-processor (DMA based) for Bluetooth Low Energy timing critical operations.

The main Bluetooth Low Energy 5.3 specification supported features are:

2 Mbps data rate, long range (Coded PHY), advertising extensions, channel selection algorithm #2, GATT caching, Direction Finding (AoA/AoD), hardware support for simultaneous connection, master/slave and multiple roles simultaneously, extended packet length support, LE Ping procedure, periodic advertising and periodic advertising sync transfer, LE power control and path loss monitoring.

In addition, the BlueNRG-LPS provides enhanced security hardware support by dedicated hardware functions:

True random number generator (RNG), encryption AES maximum 128-bit security co-processor, public key accelerator (PKA), CRC calculation unit, 64-bit unique ID, flash memory read and write protection.

The public key acceleration (PKA) supports the modular arithmetic including exponentiation with maximum modulo size of 3136 bits and the elliptic curves over prime field scalar multiplication, ECDSA signature, ECDSA verification with maximum modulo size of 521 bits CRC calculation unit.

The BlueNRG-LPS can be configured to support standalone or network processor applications. In the first configuration, the BlueNRG-LPS operates as a single device in the application for managing both the application code and the Bluetooth Low Energy stack.

The BlueNRG-LPS embeds high-speed and flexible memory types:

Flash memory of 192 Kbytes, RAM memory of 24 Kbytes, one-time-programmable (OTP) memory area of 1 Kbyte, ROM memory of 7 Kbytes (ST reserved area).

Direct data transfer between memory and peripherals and from memory-to-memory is supported by eight DMA channels with a full flexible channel mapping by the DMAMUX peripheral.

The BlueNRG-LPS embeds a 12-bit ADC, allowing measurements of up to eight external sources and up to three internal sources, including battery monitoring and a temperature sensor.

The BlueNRG-LPS has a low-power RTC and three general purpose 16-bit timers.

The BlueNRG-LPS features standard and advanced communication interfaces:

1x SPI/I2S, 1x LPUART, 1x USART supporting ISO 7816 (smartcard mode), IrDA and Modbus mode, 1x I^2C supporting SMBus/PMBus.

The BlueNRG-LPS operates in the -40 to +105 °C temperature range from a 1.7 V to 3.6 V power supply. A comprehensive set of power-saving modes enables the design of low-power applications.

The BlueNRG-LPS integrates a high efficiency SMPS step-down converter and an integrated PDR circuitry with a fixed threshold that generates a device reset when the V_{DD} drops under 1.65 V.

The BlueNRG-LPS comes in different package versions supporting up to:

20 I/Os for the QFN32 package. 20 I/Os for the WLCSP36 package.

Figure 1. BlueNRG-LPS block diagram

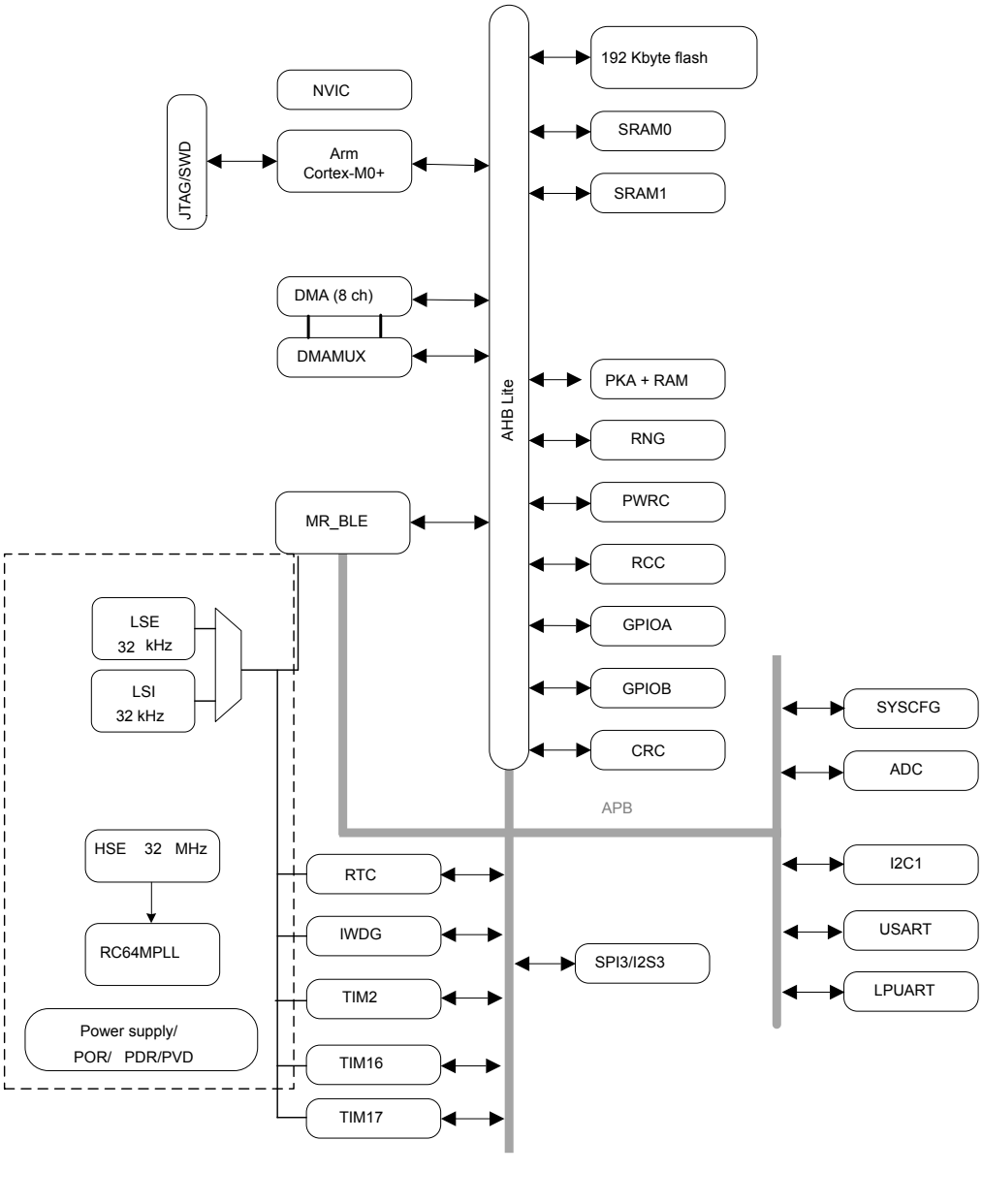

1 Introduction

This document provides the ordering information and mechanical device characteristics of the microcontrollers, based on Arm® core.

This document must be read in conjunction with the BlueNRG-LPS reference manual (RM0491) and the BlueNRG-LPS radio controller reference manual (RM0498).

For information on the device errata with respect to the datasheet and reference manual, refer to the BlueNRG-LPS errata sheet (ES0576).

For information on the Arm® Cortex®-M0+ and Cortex®-M0+ cores, refer to the technical reference manual, available from the www.arm.com website.

arm

Note: Arm and Cortex are registered trademarks of Arm Limited (or its subsidiaries or affiliates) in the US and/or elsewhere.

The Arm word and logo are trademarks of Arm Limited (or its subsidiaries) in the US and/or elsewhere. All rights reserved.

2 Functional overview

2.1 System architecture

The main system consists of 32-bit multilayer AHB bus matrix that interconnects:

- Three masters:
  - CPU (Cortex-M0+) core S-bus
  - DMA1
  - Radio system
- Seven slaves:
  - Internal flash memory on CPU (Cortex-M0+) S bus
  - Internal SRAM0 (12 Kbytes)
  - Internal SRAM1 (12 Kbytes)
  - APB0 peripherals (through an AHB to APB bridge)
  - APB1 peripherals (through an AHB to APB bridge)
  - AHB0 peripherals
  - AHBRF including AHB to APB bridge and radio peripherals (connected to APB2)

The bus matrix provides access from a master to a slave, enabling concurrent access and efficient operation even when several high-speed peripherals work simultaneously.

Figure 2. Bus matrix

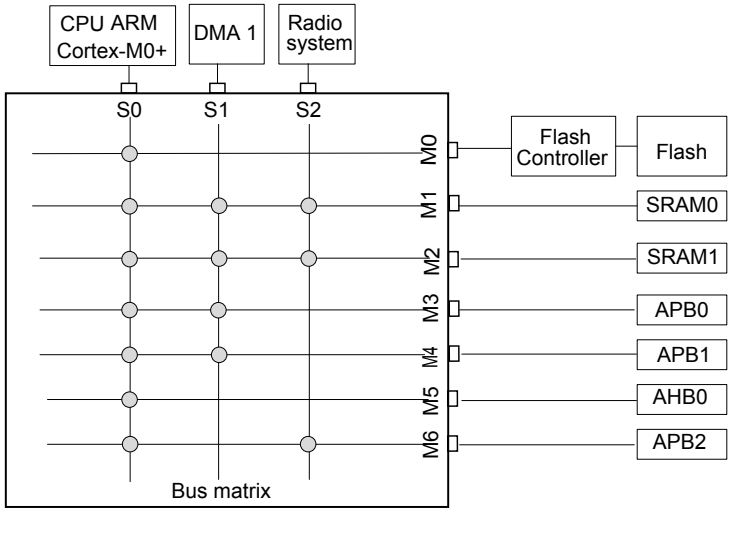

2.2 Arm Cortex-M0+ core with MPU

The BlueNRG-LPS contains an Arm Cortex-M0+ microcontroller core. The Arm® Cortex®-M0+ was developed to provide a low-cost platform that meets the needs of CPU implementation, with a reduced pin count and low-power consumption, while delivering outstanding computational performance and an advanced response to interrupts. The Arm Cortex-M0+ can run from 1 MHz up to 64 MHz.

The Arm Cortex-M0+ processor is built on a highly area and power optimized 32-bit processor core, with a 2-stage pipeline Von Neumann architecture. The processor delivers exceptional energy efficiency through a small but powerful instruction set and extensively optimized design, providing high-end processing hardware including a single-cycle multiplier.

The interrupts are handled by the Arm Cortex-M0+ Nested Vector Interrupt Controller (NVIC). The NVIC controls specific Arm Cortex-M0+ interrupts as well as the BlueNRG-LPS peripheral interrupts. With its embedded ARM core, the BlueNRG-LPS family is compatible with all ARM tools and software.

2.3 Memories

2.3.1 Embedded flash memory

The flash controller implements the erase and program flash memory operation. The flash controller also implements the read and write protection.

The flash memory features are:

- Memory organization:
  - 1 bank of 192 Kbytes
  - Page size: 2 Kbytes
  - Page number 96
- 32-bit wide data read/write
- Page erase and mass erase

The flash controller features are:

- flash memory read operations: single read or mass read
- flash memory write operations: single data write or 4x32-bits burst write or mass write
- flash memory erase operations: page erase or mass erase
- page write protect mechanism: 4 variable-size memory segments

2.3.2 Embedded SRAM

The BlueNRG-LPS has a total of 24 Kbytes of embedded SRAM, split into two banks as shown in the following table:

Table 1. SRAM overview

SRAM bank	Size	Address	Retained in DEEPSTOP
SRAM0	12 Kbytes	0x2000 0000	Always
SRAM1	12 Kbytes	0x2000 3000	Programmable by the user

2.3.3 Embedded ROM

The BlueNRG-LPS has a total of 7 Kbytes of embedded ROM. This area is ST reserved and contains:

- The UART bootloader from which the CPU boots after each reset (first 6 Kbytes of ROM memory)
- Some ST reserved values including the ADC trimming values (the last 1 Kbyte of ROM memory)

2.3.4 Embedded OTP

The one-time-programmable (OTP) is a memory of 1 Kbyte dedicated for user data. The OTP data cannot be erased.

The user can protect the OTP data area by writing the last word at address 0x1000 1BFC and by performing a system reset. This operation freezes the OTP memory from further unwanted write operations.

2.3.5 Memory protection unit (MPU)

The MPU is used to manage accesses to memory to prevent one task from accidentally corrupting the memory or resources used by any other active task. This memory area is organized into up to 8 protected areas. The protection area sizes are between 32 bytes and the whole 4 gigabytes of addressable memory.

The MPU is especially helpful for applications where some critical or certified code has to be protected against the misbehavior of other tasks. It is usually managed by an RTOS (real-time operating system). If a program accesses a memory location that is prohibited by the MPU, the RTOS can detect it and take action. In an RTOS environment, the kernel can dynamically update the MPU area settings, based on the process to be executed.

The MPU is optional and can be bypassed for applications that do not need it.

2.4 Security and safety

The BlueNRG-LPS contains many security blocks for the BLE and the host application.

It includes:

- Flash read/write protection over accidental and intentional actions
- As protection against potential hacker attacks, the SWD access can be disabled
- Secure bootloader (refer to the dedicated application note AN5471)
- Customer storage of the BLE keys
- True random number generator (RNG)
- Public key accelerator (PKA) including:
  - Modular arithmetic including exponentiation with maximum modulo size of 3136 bits
  - Elliptic curves over prime field scalar multiplication, ECDSA signature, ECDSA verification with maximum modulo size of 521 bits
- Cyclic redundancy check calculation unit (CRC)

2.5 RF subsystem

The BlueNRG-LPS embeds an ultra-low power radio, compliant with Bluetooth Low Energy (BLE) specification. The BLE features 1 Mbps and 2 Mbps transfer rates as well as long range options (125 kbps, 500 kbps), supports multiple roles simultaneously acting at the same time as Bluetooth Low Energy sensor and hub device.

The BLE protocol stack is implemented by an efficient system partitioned as follows:

- Hardware part: BlueCore handling time critical and time consuming BLE protocol parts
- Firmware part: Arm® Cortex-M0+ core handling non time critical BLE protocol parts

2.5.1 RF front-end block diagram

The RF front end is based on a direct modulation of the carrier in TX, and uses a low IF architecture in RX mode.

Thanks to an internal transformer with RF pins, the circuit directly interfaces the antenna (single ended connection, impedance close to 50 Ω). The natural band pass behavior of the internal transformer simplifies outside circuitry aimed at harmonic filtering and out of band interferer rejection.

In transmit mode, the maximum output power is user selectable through the programmable LDO voltage of the power amplifier. A linearized, smoothed analog control offers a clean power ramp-up.

In receive mode the circuit can be used in standard high performance or in reduced power consumption (user programmable). The automatic gain control (AGC) is able to reduce the chain gain at both RF and IF locations, for an optimized interferer rejection. Thanks to the use of complex filtering and highly accurate I/Q architecture, high sensitivity, and excellent linearity can be achieved.

Figure 3. **BlueNRG-LPS RF block diagram**

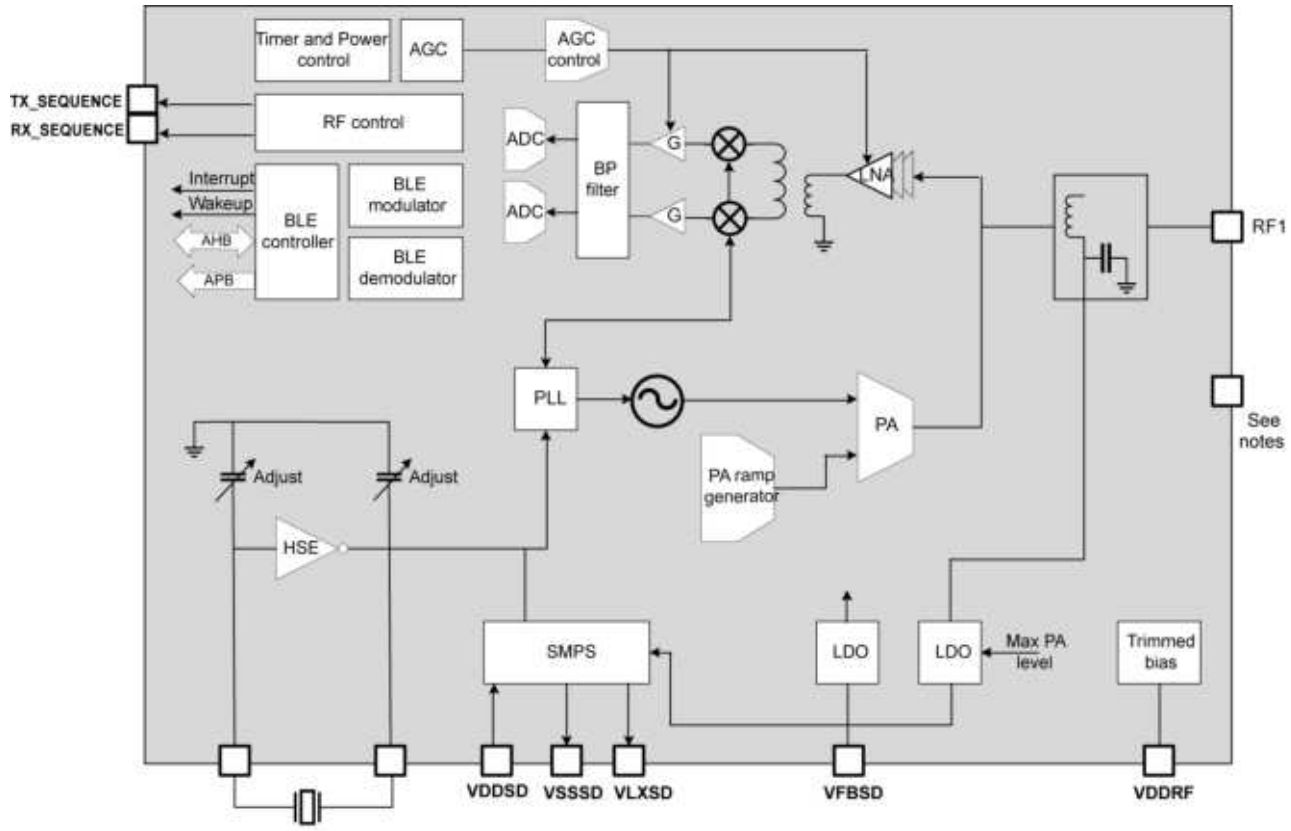

Note: QFN32: VSS through exposed pad,and VSSRF pins must be connected to ground plane.
CSP36: VSSRF pins must be connected to ground plane.

DT58133V1

Note: QFN32: VSS through exposed pad,and VSSRF pins must be connected to ground plane.
CSP36: VSSRF pins must be connected to ground plane.

2.5.2 IPDs for BlueNRG-LPS

Table 2 lists the available IPD variants for the BlueNRG-LPS device.

Table 2. **IPDs for BlueNRG-LPS**

IPD	MCU Package	BlueNRG-LPS part number
MLPF-NRG-01D3	QFN32	BlueNRG-332A
	WLCSP36	BlueNRG-332V

2.6 Power supply management

2.6.1 SMPS step-down regulator

The device integrates a step-down converter to improve low power performance when the V_{DD} voltage is high enough. The SMPS output voltage can be programmed from 1.2 V to 1.90 V. It is internally clocked at 4 MHz or 8 MHz.

The device can be operated without the SMPS by just wiring its output to VDD. This is the case for applications where the voltage is low, or where the power consumption is not critical.

Except for the configuration SMPS OFF, an L/C BOM must be present on the board and connected to the VFBSD pad.

Figure 4. Power supply configuration

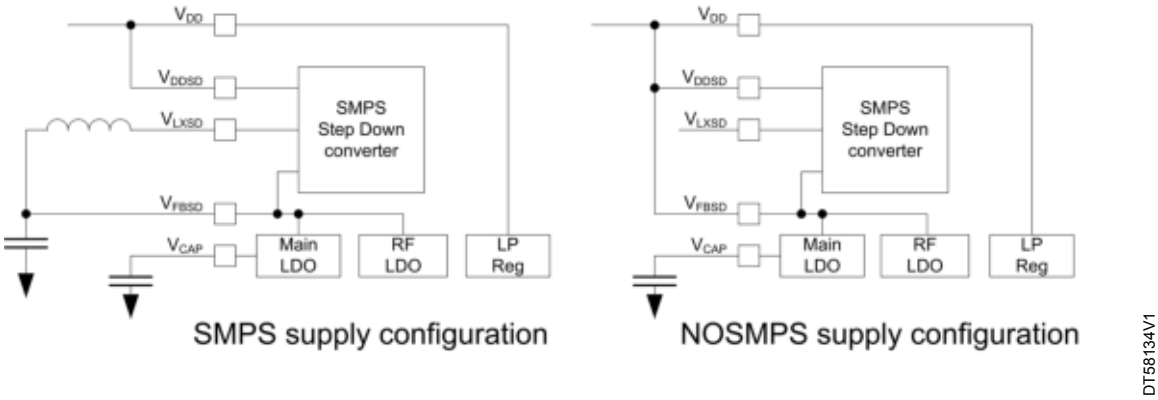

2.6.2 Power supply schemes

The BlueNRG-LPS embeds three power domains:

- V_{DD33} (V_{DDIO} or V_{DD}):
  - the voltage range is between 1.7 V and 3.6 V
  - it supplies a part of the I/O ring, the embedded regulators and the system analog IPs as power management block and embedded oscillators
- V_{DD12o}:
  - always-on digital power domain
  - this domain is generally supplied at 1.2 V during active phase of the device
  - this domain is supplied at 1.0 V during low power mode (DEEPSTOP)
- V_{DD12i}:
  - interruptible digital power domain
  - this domain is generally supplied at 1.2 V during active phase of the device
  - this domain is shut down during low power mode (DEEPSTOP)

Figure 5. Power supply domain overview

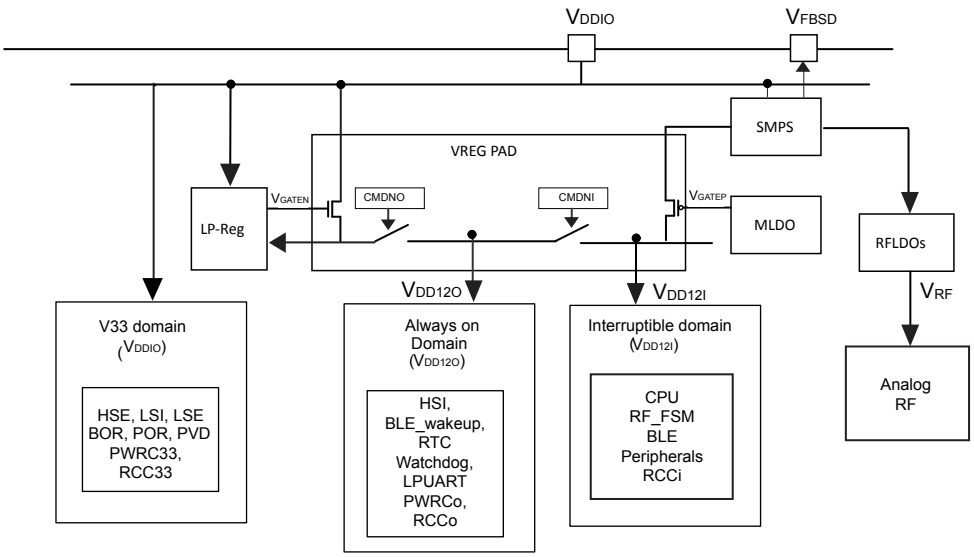

2.6.3 Linear voltage regulators

The digital power supplies are provided by different regulators:

- The main LDO (MLDO):
  - it provides 1.2 V from a 1.4-3.3 V input voltage
  - it supplies both V_{DD12i} and V_{DD12o} when the device is active
  - it is disabled during the low power mode (DEEPSTOP)
- Low power LDO (LPREG):
  - it stays enabled during both active and low power phases
  - it provides 1.0 V voltage
  - it is not connected to the digital domain when the device is active
  - it is connected to the V_{DD12o} domain during low power mode (DEEPSTOP)
- A dedicated LDO (RFLDO) to provide a 1.2 V to the analog RF block

An embedded SMPS step-down converter is available (inserted between the external power and the LDOs).

2.6.4 Power supply supervisor

The BlueNRG-LPS device embeds several power voltage monitoring:

- Power-on-reset (POR): during the power-on, the device remains in reset mode if V_{DDIO} is below a V_{POR} threshold (typically 1.65 V)
- Power-down-reset (PDR): during power-down, the PDR puts the device under reset when the supply voltage (V_{DD}) drops below the V_{PDR} threshold (around 20 mV below V_{POR}). The PDR feature is always enabled
- Power voltage detector (PVD): can be used to monitor the V_{DDIO} (against a programmed threshold) or an external analog input signal. When the feature is enabled and the PVD measures a voltage below the comparator, an interrupt is generated (if unmasked)

2.7 Operating modes

Several operating modes are defined for the BlueNRG-LPS:

- RUN mode
- DEEPSTOP mode
- SHUTDOWN mode

Table 3. Relationship between the low power modes and functional blocks

Mode	SHUTDOWN	DEEPSTOP	IDLE	RUN
CPU	OFF	OFF	OFF	ON
Flash	OFF	OFF	ON	ON
RAM	OFF	ON/OFF granularity 12 Kbytes	ON/OFF	ON/OFF
Radio	OFF	OFF	ON/OFF	ON/OFF
Supply system	OFF	OFF	ON (DC-DC ON/OFF)	ON (DC-DC ON/OFF)
Register retention	OFF	ON	ON	ON
HS clock	OFF	OFF	ON	ON
LS clock	OFF	ON/OFF	ON	ON
Peripherals	OFF	OFF	ON/OFF	ON/OFF
Wake-on RTC	OFF	ON/OFF	ON/OFF	NA
Wake on LPUART	OFF	ON/OFF	ON/OFF	NA
Wake on IWDG	OFF	ON/OFF	ON/OFF	NA
Wake-on GPIOs	OFF	ON/OFF	ON/OFF	NA
Wake-on reset pin	ON	ON	ON	NA
GPIOs configuration retention	PWRC pull-up/pull-down only	ON	ON	ON

2.7.1 RUN mode

In RUN mode the BlueNRG-LPS is fully operational:

- All interfaces are active
- The internal power supplies are active
- The system clock and the bus clock are running
- The CPU core and the radio can be used

The power consumption may be reduced by gating the clock of the unused peripherals.

2.7.2 DEEPSTOP mode

DEEPSTOP is the only low-power mode of the BlueNRG-LPS allowing the restart from a saved context environment and the application at wake-up to go on running.

The conditions to enter DEEPSTOP mode are:

- The radio is sleeping (no radio activity)
- The CPU is sleeping (WFI with SLEEPDEEP bit activated)
- No unmasked wake-up sources are active
- The low-power mode selection (LPMS) bit of the power controller unit is 0 (default)
- The GPIO Retention Mode Selection (GPIORET) bit of the Power Controller unit must be set

In DEEPSTOP mode:

- The system and the bus clocks are stopped
- Only the essential digital power domain is ON and supplied at 1.0 V
- The bank RAM0 is kept in retention
- The bank RAM1 can be in retention or not, depending on the software configuration
- The I/Os pull-up and pull-down can be controlled during DEEPSTOP mode, depending on the software configuration
- The low speed clock can be running or stopped, depending on the software configuration:
  - ON or OFF
  - Sourced by LSE or by LSI
- The RTC, IWDG and LPUART stay active, if enabled and the low speed clock is ON
- The radio wake-up block, including its timer, stay active (if enabled and the low speed clock is ON)
- Up to 20 GPIOs retaining their configuration:
  - I/Os retain the RUN mode configuration while in DEEPSTOP mode
- Up to 20 I/Os are able to be in output driving:
  - A static low or high level
- Some I/Os are able to be in output driving:
  - The low speed clock (on PA10)
  - The RTC output (on PA8)

Possible wake-up sources are:

- The radio block is able to generate two events to wake up the system through its embedded wake-up timer running on low speed clock:
  - Radio wake-up time is reached
  - CPU host wake-up time is reached
- The RTC can generate a wake-up event
- The IWDG can generate a reset event
- The LPUART is able to generate a wake-up event
- All GPIOs are able to wake up the system

At wake-up, all the hardware resources located in the digital power domain that are OFF during the DEEPSTOP mode, are reset. The CPU reboots. The wake-up reason is visible in the register of the power controller.

2.7.3 SHUTDOWN mode

The SHUTDOWN mode is the least power consuming mode.

The conditions to enter SHUTDOWN mode are the same conditions needed to enter DEEPSTOP mode except that the LPMS bit of the power controller unit is 1.

In SHUTDOWN mode, the BlueNRG-LPS is in ultra-low power consumption: all voltage regulators, clocks and the RF interface are not powered. The BlueNRG-LPS can enter shutdown mode by internal software sequence. The only way to exit shutdown mode is by asserting and deasserting the RSTN pin.

In SHUTDOWN mode:

- The system is powered down as both the regulators are OFF
- The V_{DDIO} power domain is ON
- All the clocks are OFF, LSI and LSE are OFF
- The I/Os pull-up and pull-down can be controlled during SHUTDOWN mode, depending on the software configuration
- The only wake-up source is a low pulse on the RSTN pin

The exit from SHUTDOWN is similar to a POR startup. The PDR feature can be enabled or disabled during SHUTDOWN.

2.8 Reset management

The BlueNRG-LPS offers two different resets:

- The PORESETn: this reset is provided by the low power management unit (LPMU) analog block and corresponds to a POR or PDR root cause. It is linked to power voltage ramp-up or ramp-down. This reset impacts all resources of the BlueNRG-LPS. The exit from SHUTDOWN mode is equivalent to a POR and thus generates a PORESETn. The PORESETn signal is active when the power supply of the device is below a threshold value or when the regulator does not provide the target voltage.
- The PADRESETn (system reset): this reset is built through several sources:
  - PORESETn
  - Reset due to the watchdog
    The BlueNRG-LPS device embeds a watchdog timer, which may be used to recover from software crashes
  - Reset due to CPU Lockup
    The Cortex-M0+ generates a lockup to indicate the core is in the lock-up state resulting from an unrecoverable exception. The lock-up reset is masked if a debugger is connected to the Cortex-M0+
  - Software system reset
    The system reset request is generated by the debug circuitry of the Cortex-M0+. The debugger sets the SYSRESETREQ bit of the application interrupt and reset control register (AIRCR). This system reset request through the AIRCR can also be done by the embedded software (into the hardfault handler for instance)
  - Reset from the RSTN external pin
    The RSTN pin toggles to inform that a reset has occurred

  This PADRESETn resets all resources of the BlueNRG-LPS, except:
  - Debug features
  - Flash controller key management
  - RTC timer
  - Power controller unit
  - Part of the RCC registers

The pulse generator guarantees a minimum reset pulse duration of 20 µs for each internal reset source. In case of reset from the RSTN external pad, the reset pulse is generated when the pad is asserted low.

2.9 Clock management

Three different clock sources may be used to drive the system clock of the BlueNRG-LPS:

- HSI: high speed internal 64 MHz RC oscillator
- PLL64M: 64 MHz PLL clock
- HSE: high speed 32 MHz external crystal

The BlueNRG-LPS also has a low speed clock tree used by some timers in the radio, RTC, IWDG and LPUART.

Three different clock sources can be used for this low speed clock tree:

- Low speed internal (LSI): low speed and low drift internal RC with a fixed frequency between 24 kHz and 49 kHz depending on the sample
- Low speed external (LSE) from:
  - An external crystal 32.768 kHz
  - A single-ended 32.738 kHz input signal
- A 32 kHz clock derived from dividing HSI or HSE. In this case, the slow clock is not available in DEEPSTOP low-power mode

By default, after a system reset, all low speed sources are OFF.

Both the activation and the selection of the slow clock are relevant during DEEPSTOP mode and at wakeup as slow clock generates a clock for the timers involved in wake-up event generation.

The HSI and the PLL64M clocks are provided by the same analog block called RC64MPLL. The 64 MHz clock output by this block can be:

- A non-accurate clock when no external XO provides an input clock to this block (HSI)
- An accurate clock when the external XO provides the 32 MHz and once its internal PLL is locked (PLL64M)

After reset, the CLK_SYS is divided by four to provide 16 MHz to the whole system (CPU, DMA, memories and peripherals).

Figure 6. **Clock tree**

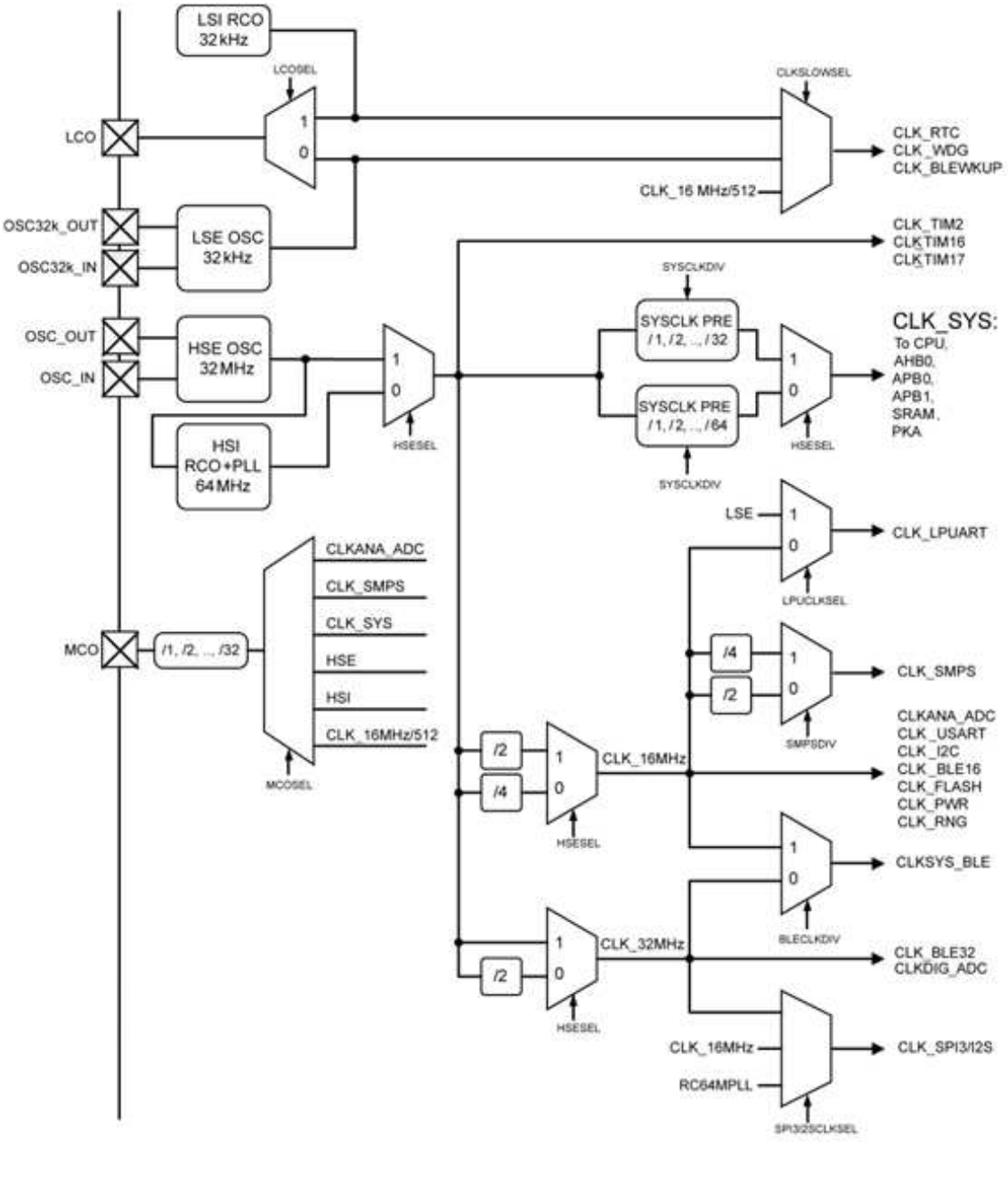

It is possible to output some internal clocks on external pads:

- The low speed clocks can be output on the LCO I/O
- The high speed clocks can be output on the MCO I/O

This is possible by programming the associated I/O in the correct alternate function.

Most of the peripherals only use the system clock except:

- I^2C, USART: they use an always 16 MHz clock to have a fixed reference clock for baud rate management. The goal is to allow the CPU to boost or slow down the system clock (depending on on-going activities) without impacting a potential on-going serial interface transfer on external I/Os
- LPUART: always uses a 16 MHz clock or LSE to have a fixed reference clock for baud rate management. The goal is to allow the CPU to boost or slow down the system clock (depending on on-going activities) without impacting a potential on-going serial interface transfer on external I/Os.
- SPI: when using the I2S mode, the baud rate is managed through the always 16 MHz or always 32 MHz clock or system clock (CLK_SYS) to reach higher baud rates. When running in other modes than the I2S, the baud rate is managed by the system clock. This implies its baud rate is impacted by dynamic system clock frequency changes.
- RNG: in parallel with the system clock, the RNG uses an always 16 MHz clock to generate at a constant frequency the random number whatever the system clock frequency
- Flash controller: in parallel with the system clock, the flash controller uses an always 16 MHz clock to generate specific delays required by the flash memory during programming and erase operations for example
- PKA: in parallel with the system clock, the PKA uses the system clock frequency
- Radio: it does not directly use the system clock for its APB/AHB interfaces, but the system clock with a potential divider (1 or 2 or 4). In parallel, the radio uses an always 16 MHz and an always 32 MHz for modulator, demodulator and to have a fixed reference clock to manage specific delays
- ADC: in parallel with the system clock, ADC uses a 64 MHz prescaled clock running at 16 MHz

2.10 Boot mode

Following CPU boot, the application software can modify the memory map at address 0x0000 0000. This modification is performed by programming the REMAP bit in the flash controller.

The following memory can be remapped:

- main flash memory
- SRAM0 memory

2.11 Embedded UART bootloader

The BlueNRG-LPS has a pre-programmed bootloader supporting UART protocol with automatic baud rate detection. The main features of the embedded bootloader are:

- auto baud rate detection up to 1 Mbps
- flash mass erase, section erase
- flash programming
- flash readout protection enable/disable

The pre-programmed bootloader is an application, which is stored in the BlueNRG-LPS internal ROM at manufacturing time by STMicroelectronics. This application allows upgrading of the device flash memory with a user application using a serial communication channel (UART).

Bootloader is activated by hardware by forcing PA10 high during hardware reset, otherwise, application residing in flash memory is launched.

Note: Bootloader protocol is described in a separate application note (the UART bootloader protocol, AN5471)

2.12 General purpose inputs/outputs (GPIO)

Each of the GPIO pins can be configured by software as output (push-pull or open-drain), as input (with or without pull-up or pull-down) or as peripheral alternate function. Most of the GPIO pins are shared with digital or analog alternate functions. Fast I/O toggling can be achieved thanks to their mapping on the AHB0 bus.

The I/Os alternate function configuration can be locked if needed following a specific sequence in order to avoid spurious writing to the I/Os registers.

2.13 Direct memory access (DMA)

The DMA is used in order to provide high-speed data transfer between peripherals and memory as well as memory-to-memory. Data can be quickly moved by DMA without any CPU actions. In this manner, CPU resources are free for other operations.

The DMA controller has eight channels in total. Each has an arbiter to handle the priority among DMA requests.

DMA main features are:

- Eight independently configurable channels (requests)
- Each of the eight channels is connected to dedicated hardware DMA requests, software trigger is also supported on each channel. This configuration is done by software
- Priorities among requests from channels of DMA are software programmable (four levels consisting of very high, high, medium, low) or hardware in case of equality (request 1 has priority over request 2, and so on)
- Independent source and destination transfer size (byte, half word, word), emulating packing and unpacking. Source/destination addresses must be aligned on the data size
- Support for circular buffer management
- Three event flags (DMA half transfer, DMA transfer complete and DMA transfer error) logically ORed together in a single interrupt request for each channel
- Memory-to-memory transfer (RAM only)
- Peripheral-to-memory and memory-to-peripheral, and peripheral-to-peripheral transfers
- Access to SRAMs, APB0 and APB1 peripherals as source and destination
- Programmable number of data to be transferred: up to 65536

2.14 Nested vectored interrupt controller (NVIC)

The interrupts are handled by the Cortex-M0+ nested vector interrupt controller (NVIC). NVIC controls specific Cortex-M0+ interrupts as well as the BlueNRG-LPS peripheral interrupts.

The NVIC benefits are the following:

- Nested vectored interrupt controller that is an integral part of the ARM Cortex-M0+
- Tightly coupled interrupt controller provides low interrupt latency
- Control system exceptions and peripheral interrupts
- NVIC supports 32 vectored interrupts
- Four programmable interrupt priority levels with hardware priority level masking
- Software interrupt generation using the ARM exceptions SVCall and PendSV
- Support for NMI
- ARM Cortex M0+ vector table offset register VTOR implemented

NVIC hardware block provides flexible interrupt management features with minimal interrupt latency.

2.15 Analog digital converter (ADC)

The BlueNRG-LPS embeds a 12-bit ADC. The ADC consists of a 12-bit successive approximation analog-to-digital converter (SAR) with 2 x 8 multiplexed channels allowing measurements of up to eight external sources and up to two internal sources.

The ADC main features are:

- Conversion frequency is up to 1 Msps
- Three input voltage ranges are supported (0 - 1.2 V, 0 - 2.4 V, 0 - 3.6 V)
- Up to eight analog single-ended channels or four analog differential inputs or a mix of both
- Temperature sensor conversion
- Battery level conversion up to 3.6 V
- ADC continuous or single mode conversion is possible
- ADC down-sampler for multi-purpose applications to improve analog performance while off-loading the CPU (ratio adjustable from 1 to 128)
- A watchdog feature to inform when data is outside thresholds
- DMA capability
- Interrupt sources with flags.

2.15.1 Temperature sensor

The temperature sensor (TS) generates a voltage that varies linearly with temperature. The temperature sensor is internally connected to the ADC input channel, which is used to convert the sensor output voltage into a digital value.

To improve the accuracy of the temperature sensor measurement, each device is individually factory-calibrated by ST. The temperature sensor factory calibration data are stored by ST in the system memory area, accessible in read-only mode.

2.16 True random number generator (RNG)

RNG is a random number generator based on a continuous analog noise that provides a 16-bit value to the host when read. The minimum period is 1.25 us, corresponding to 20 RNG clock cycles between two consecutive random number.

2.17 Timers and watchdog

The BlueNRG-LPS includes three general-purpose timers, one watchdog timer and a SysTick timer.

2.17.1 General-purpose timers (TIM2, TIM16, TIM17)

There are up to three general-purpose timers embedded in the BlueNRG-LPS.

Each general-purpose timer can be used to generate PWM outputs, or act as a simple time base.

- TIM2
  - Full-featured general-purpose timer
  - Features four independent channels for input capture/output compare, PWM or one-pulse mode output
  - Independent DMA request generation, support of quadrature encoders
- TIM16 and TIM17
  - General-purpose timers with mid-range features:
  - 16-bit auto-reload upcounters and 16-bit prescalers
  - 1 channel and 1 complementary channel
  - All channels can be used for input capture/output compare, PWM or one-pulse mode output
  - The timers have independent DMA request generation
  - The timers are internally connected to generate an infrared interface (IRTIM) for remote control

2.17.2 Independent watchdog (IWDG)

The independent watchdog is based on a 12-bit downcounter and 8-bit prescaler. It is clocked from the LS clock and it can operate in DEEPSTOP mode. It can also be used as a watchdog to reset the device when a problem occurs.

2.17.3 SysTick timer

This timer is dedicated to real-time operating systems, but could also be used as a standard down counter. It features:

- A 24-bit down counter
- Autoreload capability
- Maskable system interrupt generation when the counter reaches 0

2.18 Real-time clock (RTC)

The RTC is an independent BCD timer/counter. The RTC provides a time of day/clock/calendar with programmable alarm interrupt. RTC includes also a periodic programmable wake-up flag with interrupt capability. The RTC provides an automatic wake-up to manage all low power modes.

Two 32-bit registers contain seconds, minutes, hours (12- or 24-hour format), day (day of week), date (day of month), month, and year, expressed in binary coded decimal format (BCD). The sub-second value is also available in binary format. Compensations for 28-, 29- (leap year), 30-, and 31-day months are performed automatically. Daylight saving time compensation can also be performed. Additional 32-bit registers contain the programmable alarm sub seconds, seconds, minutes, hours, day, and date.

A digital calibration circuit with 0.95 ppm resolution is available to compensate for quartz crystal inaccuracy. After power-on reset, all RTC registers are protected against possible parasitic write accesses. As long as the supply voltage remains in the operating range, the RTC never stops, regardless of the device status (RUN mode, low power mode or under system reset). The RTC counter does not freeze when CPU is halted by a debugger.

2.19 Inter-integrated circuit interface (I^2C)

The BlueNRG-LPS embeds one I^2Cs. The I^2C bus interface handles communications between the microcontroller and the serial I^2C bus. It controls all I^2C bus-specific sequencing, protocol, arbitration and timing.

The I^2C peripheral supports:

- I^2C bus specification and user manual rev. 5 compatibilities:
  - Slave and master modes
  - Multimaster capability
  - Standard-mode (Sm), with a bitrate up to 100 kbit/s
  - Fast-mode (Fm), with a bitrate up to 400 kbit/s
  - Fast-mode Plus (fm+), with a bitrate up to 1 Mbit/s and 20 mA output driver I/Os
  - 7-bit and 10-bit addressing mode
  - Multiple 7-bit slave addresses (2 addresses, 1 with configurable mask)
  - All 7-bit address acknowledge mode
  - General call
  - Programmable setup and hold times
  - Easy to use event management
  - Optional clock stretching
  - Software reset
- System management Bus (SMBus) specification rev 2.0 compatibility:
  - Hardware PEC (Packet Error Checking) generation and verification with ACK control
  - Address resolution protocol (ARP) support
  - Host and device support
  - SMBus alert
  - Timeouts and idle condition detection
- Power system management protocol ($PMBus^{TM}$) specification rev 1.1 compatibility
- Independent clock: a choice of independent clock sources allowing the I^2C communication speed to be independent from the PCLK reprogramming
- Programmable analog and digital noise filters
- 1-byte buffer with DMA capability

2.20 Universal synchronous/asynchronous receiver transmitter (USART)

USART offers flexible full-duplex data exchange with external equipment requiring an industry standard NRZ asynchronous serial data format. USART is able to communicate with a speed up to 2 Mbit/s. Furthermore, USART is able to detect and automatically set its own baud rate, based on the reception of a single character.

The USART peripheral supports:

- Synchronous one-way communication
- Half-duplex single wire communication
- Local interconnection network (LIN) master/slave capability
- Smart card mode, ISO 7816 compliant protocol
- IrDA (infrared data association) SIR ENDEC specifications
- Modem operations (CTS/RTS)
- RS485 driver enable
- Multiprocessor communications
- SPI-like communication capability

High speed data communication is possible by using DMA (direct memory access) for multibuffer configuration.

2.21 LPUART

The device embeds one low-power UART, enabling asynchronous serial communication with minimum power consumption. The LPUART supports half duplex single wire communication and modem operations (CTS/RTS), allowing multiprocessor communication.

The LPUART has a clock domain independent from the CPU clock, and can wake up the system from DEEPSTOP mode using baud rates up to 9600 baud. The wake-up events from Stop mode are programmable and can be:

- Start bit detection
- Any received data frame
- A specific programmed data frame

Only a 32.768 kHz clock (LSE) is needed to allow LPUART communication up to 9600 baud. Therefore, even in DEEPSTOP mode, the LPUART can wait for an incoming frame while having an extremely low energy consumption. Higher speed clock can be used to reach higher baud rates in RUN mode.

The LPUART interfaces can be served by the DMA controller.

2.22 Serial peripheral interface (SPI)

The BlueNRG-LPS has one SPI interface (SPI3) allowing communication up to 32 Mbit/s in both master and slave modes. The SPI peripheral supports:

- Master or slave operation
- Multimaster support
- Full-duplex synchronous transfers on three lines
- Half-duplex synchronous transfer on two lines (with bidirectional data line)
- Simplex synchronous transfers on two lines (with unidirectional data line)
- Serial communication with external devices
- NSS management by hardware or software for both master and slave: dynamic change of master/slave operations
- SPI Motorola support
- SPI TI mode support
- Hardware CRC feature for reliable communication

All SPI interfaces can be served by the DMA controller.

2.23 Inter-IC sound (I2S)

The BlueNRG-LPS SPI interface SPI3 supports the I2S protocol. The I2S interface can operate in slave or master mode with half-duplex communication. It can address four different audio standards:

- Philips I2S standard
- MSB-justified standards (left-justified)
- LSB-justified standards (right-justified)
- PCM standard.

The I2S interfaces DMA capability for transmission and reception.

2.24 Serial wire debug port

The BlueNRG-LPS embeds an ARM SWD interface that allows interactive debugging and programming of the device. The interface is composed of only two pins: SWDIO and SWCLK. The enhanced debugging features for developers allow up to 4 breakpoints and up to 2 watchpoints.

2.25 TX and RX event alert

The BlueNRG-LPS is provided with the TX_SEQUENCE and RX_SEQUENCE signals which alert, respectively, transmission and reception activities.

A signal can be enabled for TX and RX on two pins, through alternate functions:

- TX_SEQUENCE is available on PA10 (AF2) or PB14 (AF1).
- RX_SEQUENCE is available on PA8 (AF2) or PA11 (AF2).

The signal is high when radio is in TX (or RX), low otherwise.

The signals can be used to control external antenna switching and support coexistence with other wireless technologies.

Note: The RF_ACTIVITY signal is used to notify if there is an ongoing RF operation (either TX or RX). It is a logical OR between the RX_SEQUENCE and TX_SEQUENCE. This signal can be used to enable an antenna switch component when achieving antenna switching during AoA or AoD operation.

2.26 Direction finding

The BlueNRG-LPS Bluetooth radio controller supports the angle of arrival (AoA) and angle of departure (AoD) features by managing:

- the constant tone extension (CTE) inside a packet
- the antenna switching mechanism for both AoA and AoD.

The antenna switching mechanism provides a 7-bit antenna identifier ANTENNA_ID[6:0] indicating the antenna number to be used.

In a AoD transmitter or in a AoA receiver, the radio needs to switch antenna during the CTE field of the packet. For this purpose, the ANTENNA_ID signal can be enabled on some I/Os, by programming them in the associated alternate function. This signal needs to be provided to an external antenna switching circuit, since ANTENNA_ID[0] is the least significant bit and ANTENNA _ID[6] the most significant bit of the antenna identifier to be used.

3 Pinouts and pin description

The BlueNRG-LPS comes in two package versions: WLCSP36 offering 20 GPIOs and QFN32 offering 20 GPIOs.

Figure 7. Pinout top view (QFN32 package)

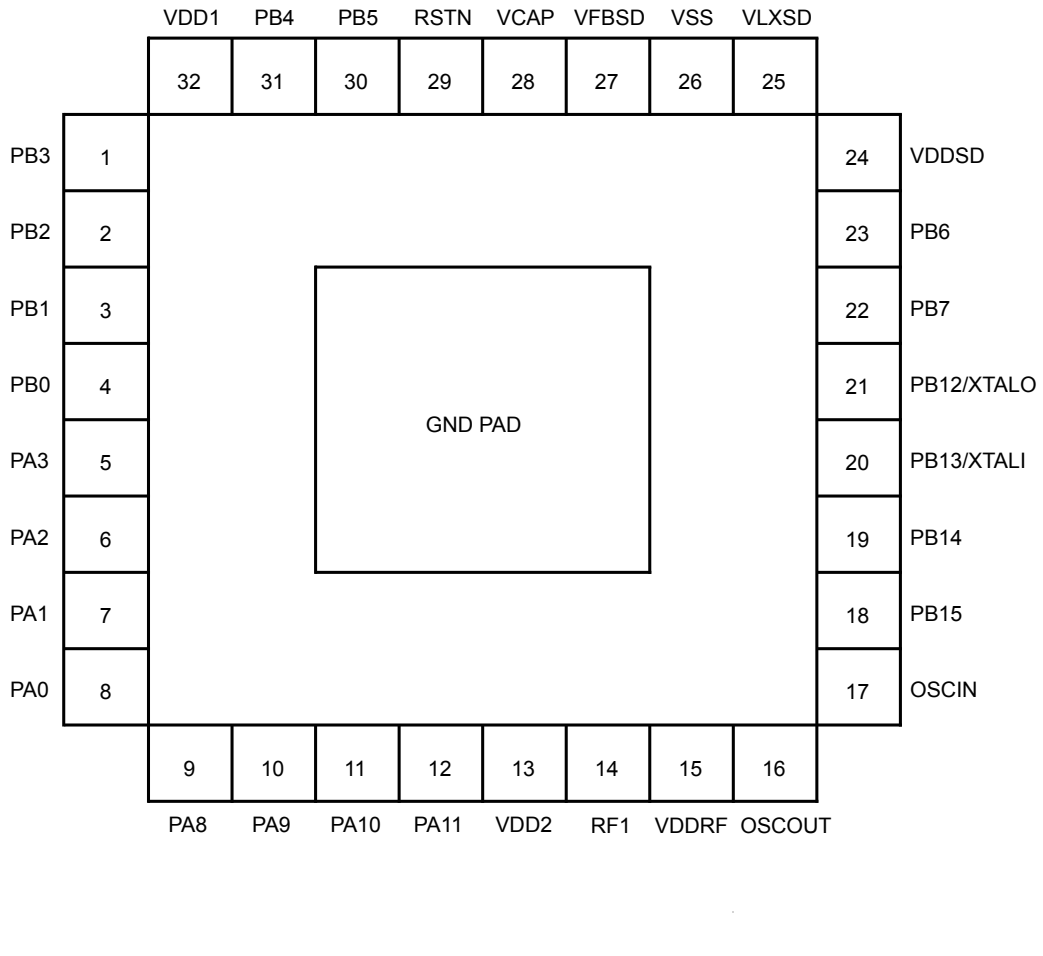

Figure 8. **Pinout bump side view (WLCSP36 package)**

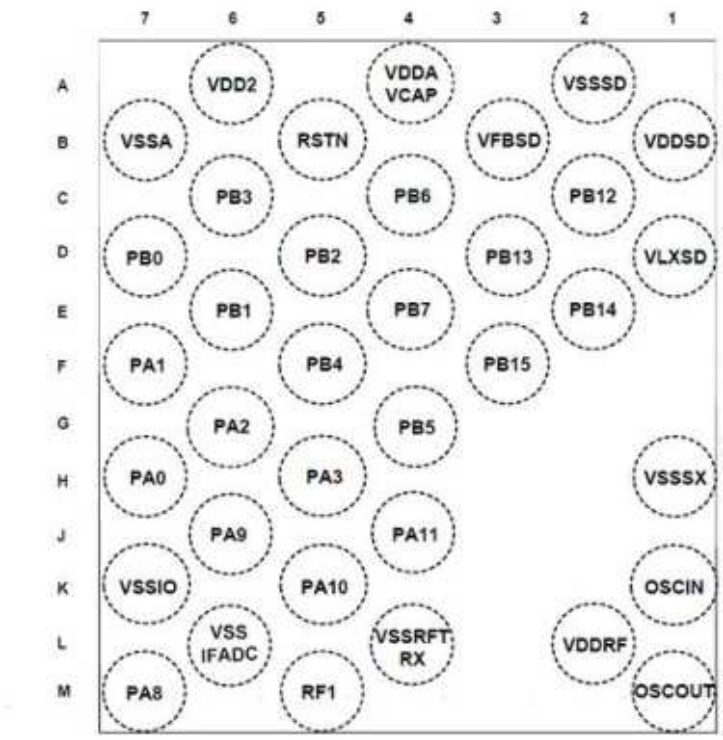

DT58139V1

Table 4. Pin descriptions

Pin number		Pin name (function after reset)	Pin type	I/O structure	Alternate functions	Additional functions
QFN32	WLCSP36					
1	C6	PB3	I/O	TT_a	USART_CTS, LPUART_TX, SPI3_SCK, TIM2_CH4, TIM17_CH1, ANTENNA_ID[3], I2S3_SCK	ADC_VINP0, wakeup
2	D5	PB2	I/O	TT_a	USART_RTS_DE, TIM2_CH3, TIM16_BK, ANTENNA_ID[2]	ADC_VINM0, wakeup
3	E6	PB1	I/O	TT_a	USART_CK, TIM2_ETR, TIM16_CH1N, ANTENNA_ID[1]	ADC_VINP1, wakeup
4	D7	PB0	I/O	TT_a	USART_RX, LPUART_RTS_DE, TIM16_CH1, ANTENNA_ID[0]	ADC_VINM1, wakeup
5	H5	PA3	I/O	TT_a	SWCLK, USART_RTS_DE, SPI3_SCK, TIM2_CH2, TIM16_CH1N, I2S3_SCK	ADC_VINP2, wakeup
6	G6	PA2	I/O	TT_a	SWDIO, USART_CK, SPI3_MCK, TIM2_CH1, TIM16_CH1, I2S3_MCK	ADC_VINM2, wakeup
7	F7	PA1	I/O	TT_f	I2C1_SDA, IR_OUT, USART_TX, TIM2_CH4	Wakeup
8	H7	PA0	I/O	TT_f	I2C1_SCL, USART_CTS, IR_OUT, TIM2_CH3	Wakeup
9	M7	PA8	I/O	TT	USART_RX, RX_SEQUENCE, SPI3_MISO, TIM2_CH3, TIM16BK, I2S3_MISO	Wakeup, RTC_OUT
10	J6	PA9	I/O	TT	USART_TX, RTC_OUT, SPI3_NSS, TIM2_CH4, TIM17_CH1, I2S3_WS	Wakeup
11	K5	PA10	I/O	TT	LPUART_CTS, TX_SEQUENCE, SPI3_MCK, TIM17_CH1N, I2S3_MCK	Wakeup, LCO
12	J4	PA11	I/O	TT	MCO, RX_SEQUENCE, SPI3_MOSI, TIM17_BK, I2S3_SD	Wakeup
13	A6	VDD2	S	-	-	1.7-3.6 battery voltage input
14	M5	RF1	I/O	RF	-	RF input/output. Impedance 50 Ω
15	L2	VDDRF	S	-	-	1.7-3.6 battery voltage input
16	M1	OSCOUT	I/O	TT_a	-	32 MHz crystal
17	K1	OSCIN	I/O	TT_a	-	32 MHz crystal
18	F3	PB15	I/O	TT_a	USART_TX	Wakeup
19	E2	PB14	I/O	TT_a	TX_SEQUENCE, I2C1_SDA, TIM2_ETR, MCO, USART_RX	PVD_IN, Wakeup
20	D3	PB13	I/O	TT_a	TIM2_CH4	SXTAL1, Wakeup
21	C2	PB12	I/O	TT_a	LPUART_CTS, LCO, TIM2_CH3	SXTAL0, Wakeup
22	E4	PB7	I/O	TT_f	USART_CTS, I2C1_SDA, LPUART_RX, TIM2_CH2, RF_ACTIVITY	Wakeup
23	C4	PB6	I/O	TT_f	I2C1_SCL, LPUART_TX, TIM2_CH1, TIM17_CH1, ANTENNA_ID[6]	Wakeup
24	B1	VDDSD	S	-	-	1.7-3.6 battery voltage input
25	D1	VLXSD	S	-	-	SMPS input/output
26	A2	VSSSD	S	-	-	SMPS Ground

Pin number		Pin name (function after reset)	Pin type	I/O structure	Alternate functions	Additional functions
QFN32	WLCSP36					
27	B3	VFBSD	S	-	-	SMPS output
28	A4	VDDA_VCAP	S	-	-	1.2 V digital core
29	B5	RSTN	I/O	RST	-	Reset pin
30	G4	PB5	I/O	TT_a	LPUART_RX, TIM2_CH2, TIM17_BK, ANTENNA_ID[5]	Wakeup, ADC_VINP3
31	F5	PB4	I/O	TT_a	LPUART_TX, TIM2_CH1, TIM17_CH1N, ANTENNA_ID[4]	Wakeup, ADC_VINM3
32	-	VDD1	S	-	-	1.7-3.6 battery voltage input
-	B7	VSSA	S	-	-	Ground analog ADC core
-	k7	VSSIO	S	-	-	Ground I/O
-	L6	VSSIFADC	S	-	-	Ground analog RF
-	H1	VSSSX	S	-	-	Ground analog RF
-	L4	VSSRFTRX	S	-	-	Ground analog RF
Exposed pad	-	GND	S	-	-	Ground

Table 5. Legend/abbreviations used in the pinout table

Name		Abbreviation	Definition
Pin name		Unless otherwise specified in brackets below, the pin name and the pin function during and after reset are the same as the actual pin name	
Pin type		S	Supply pin
		I	Input only pin
		I/O	Input / output pin
I/O structure		FT	5 V tolerant I/O
		TT	3.6 V tolerant I/O
		RF	RF I/O
		RST	Bidirectional reset pin with weak pull-up resistor
		Options for TT or FT I/Os	
		_f.	I/O, Fm+ capable
		_a.	I/O, with analog switch function supplied by IO BOOSTER(1)
Notes		Unless otherwise specified by a note, all I/Os are set as analog inputs during and after reset	
Pin functions	Alternate functions	Functions selected through GPIOx_AFR registers	
	Additional functions	Functions directly selected/enabled through peripheral registers	

1. *IO BOOSTER block allows the good behavior of those switches to be guaranteed when the VBAT goes below 2.7 V.*

Table 6. Alternate function port A

Port		AF0	AF1	AF2	AF3	AF4	AF5	AF6	AF7
		I2C1/ SYS_AF/ USART	IR/LPUART/USART	IR/RTC USART/RF	SPI3	TIM2	SYS_AF	TIM16/TIM17	SYS_AF
Port A	PA0	I2C1_SCL	USART_CTS	IR_OUT	-	TIM2_CH3	-	-	-
	PA1	I2C1_SDA	IR_OUT	USART_TX	-	TIM2_CH4	-	-	-
	PA2	SWDIO	USART_CK	-	SPI3_MCKK / I2S3_MCK	TIM2_CH1	SWDIO	TIM16_CH1	SWDIO
	PA3	SWCLK	USART_RTS_DE	-	SPI3_SCK / I2S3_SCK	TIM2_CH2	SWCLK	TIM16_CH1N	SWCLK
	PA8	USART_RX	-	RX_SEQUENCE	SPI3_MISO / I2S3_MISO	TIM2_CH3	-	TIM16_BK	-
	PA9	USART_TX	-	RTC_OUT	SPI3_NSS / I2S3_WS	TIM2_CH4	-	TIM17_CH1	-
	PA10	-	LPUART_CTS	TX_SEQUENCE	SPI3_MCK / I2S3_MCK	-	-	TIM17_CH1N	-
	PA11	MCO	-	RX_SEQUENCE	SPI3_MOSI / I2S3_SD	-	-	TIM17_BK	-

Table 7. Alternate function port B

Port		AF0	AF1	AF2	AF3	AF4	AF5	AF6	AF7
		I2C1/ USART/ LPUART	SYS_AF/ LPUART	LPUART/TIM2 TIM16/RIM17	TIM2/SYS_AF/ LPUART	TIM2	-	RF/USART	-
Port B	PB0	USART_RX	LPUART_RTS_DE	TIM16_CH1	-	-	-	ANTENNA_ID[0]	-
	PB1	USART_CK	-	TIM16_CH1N	TIM2_ETR	-	-	ANTENNA_ID[1]	-
	PB2	USART_RTS_DE	-	TIM16_BK	TIM2_CH3	-	-	ANTENNA_ID[2]	-
	PB3	USART_CTS	LPUART_TX	TIM17_CH1	TIM2_CH4	SPI3_SCK / I2S3_SCK	-	ANTENNA_ID[3]	-
	PB4	LPUART_TX	-	TIM17_CH1N	-	TIM2_CH1	-	ANTENNA_ID[4]	-
	PB5	LPUART_RX	-	TIM17_BK	-	TIM2_CH2	-	ANTENNA_ID[5]	-
	PB6	I2C1_SCL	-	TIM17_CH1	LPUART_TX	TIM2_CH1	-	ANTENNA_ID[6]	-
	PB7	I2C1_SDA	-	USART_CTS	LPUART_RX	TIM2_CH2	-	RF_ACTIVITY	-
	PB12	-	LCO	LPUART_CTS	-	TIM2_CH3	-	-	-
	PB13	-	-	-	-	TIM2_CH4	-	-	-
	PB14	I2C1_SMBA	TX_SEQUENCE	TIM2_ETR	MCO	-	-	USART_RX	-
	PB15	-	-	-	-	-	-	USART_TX	-

4 Memory mapping

Program memory, data memory and registers are organized within the same linear 4-Gbyte address space.

Figure 9. Memory map

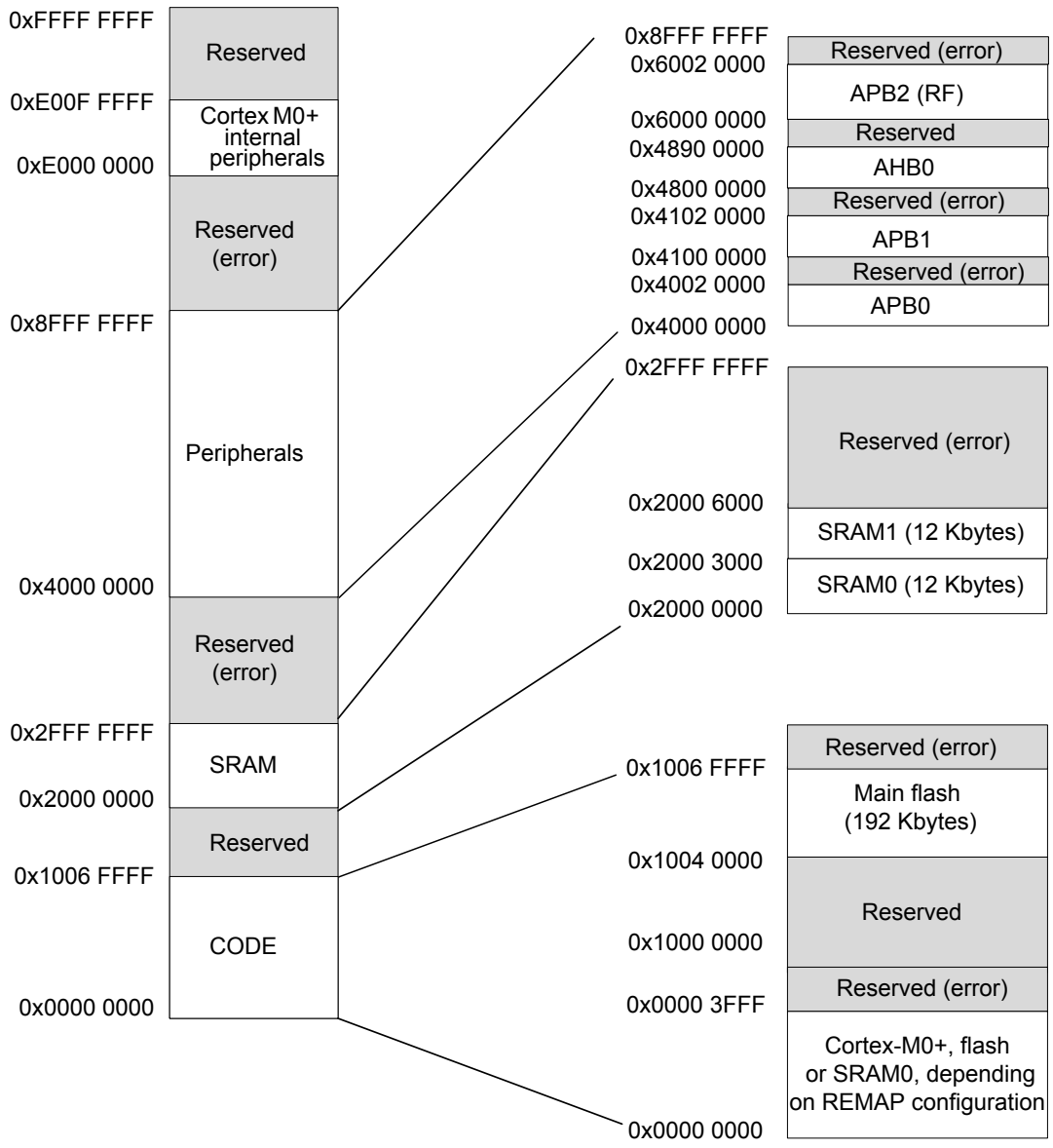

DT58140V1

5 Application circuits

The schematics below are purely indicative.

Figure 10. Application circuit: DC-DC converter, WLCSP36 package

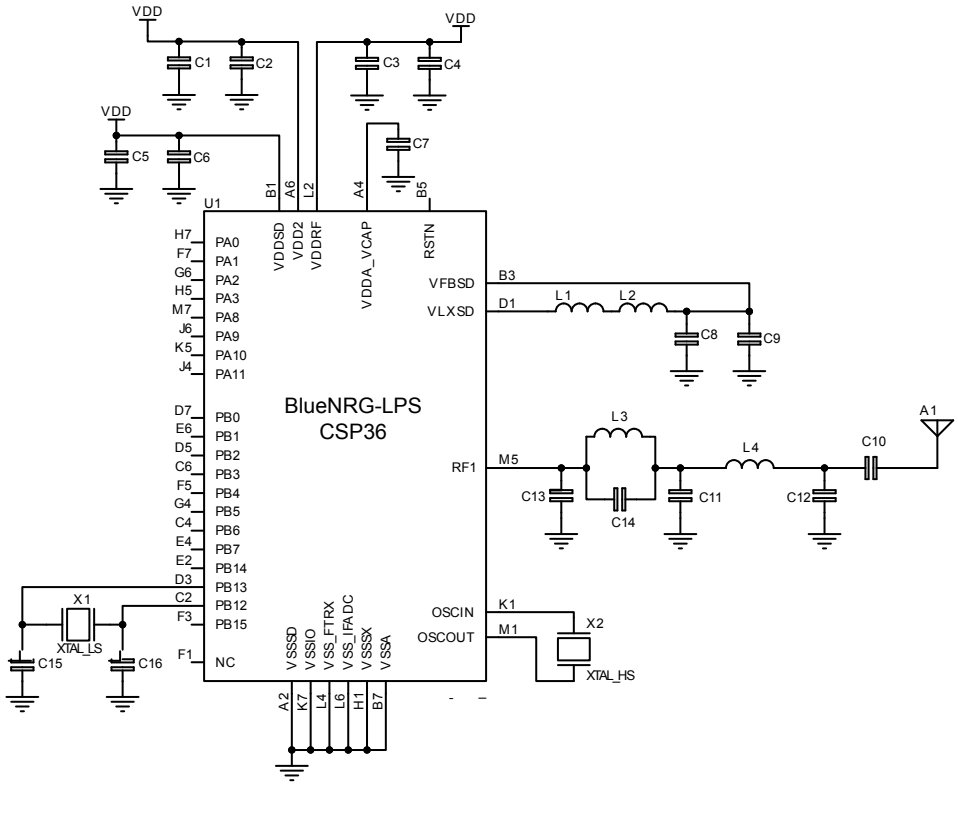

Figure 11. Application circuit: DC-DC converter, QFN32 package

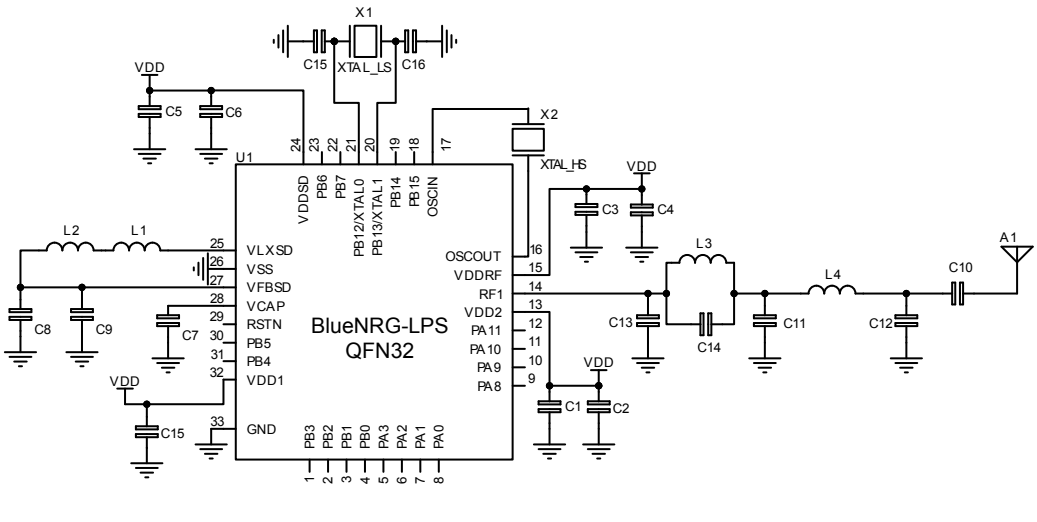

Table 8. Application circuit external components

Component	Description
C1	Decoupling capacitor
C2	Decoupling capacitor
C3	Decoupling capacitor
C4	Decoupling capacitor
C5	Decoupling capacitor
C6	Decoupling capacitor
C7	Main LDO capacitor
C8	DC–DC converter output capacitor
C9	DC–DC converter output capacitor
C10	DC block capacitor
C12	RF Matching capacitor
C13	RF Matching capacitor
C14	RF Matching capacitor
C15	32 kHz crystal loading capacitor
C16	32 kHz crystal loading capacitor
L1	DC-DC converter output inductor
L2	DC-DC converter noise filter
L3	RF matching inductor
L4	RF matching inductor
X1	Low speed crystal
X2	High speed crystal
U1	BlueNRG-LPS

Note: In order to make the board DC–DC OFF, the inductance L1 must be removed and the supply voltage must be applied to the VFBSD pin.

6 Electrical characteristics

6.1 Parameter conditions

Unless otherwise specified, all voltages are referenced to ground (GND).

6.1.1 Minimum and maximum values

Unless otherwise specified, the minimum and maximum values are guaranteed in the following standard conditions:

- Ambient temperature is T_A = 25 °C
- Supply voltage is V_{DD}: 3.3 V
- System clock frequency is 32 MHz (clock source HSI)
- SMPS clock frequency is 4 MHz

Data based on characterization results, design simulation and/or technology characteristics are indicated in the table footnotes and are not tested in production. Based on characterization, the minimum and maximum values refer to sample tests and represent the mean value plus or minus three times the standard deviation (mean ±3σ).

6.1.2 Typical values

Unless otherwise specified, typical data are based on T_A = 25 °C, V_{DD} = 3.3 V. They are given only as design guidelines and are not tested.

Typical ADC accuracy values are determined by characterization of a batch of samples from a standard diffusion lot over the full temperature range, where 95% of the devices have an error less than or equal to the value indicated (mean ± 2σ).

6.1.3 Typical curves

Unless otherwise specified, all typical curves are only given as design guidelines and are not tested.

6.1.4 Loading capacitor

The loading conditions used for pin parameter measurement are shown in the figure below.

Figure 12. Pin loading conditions

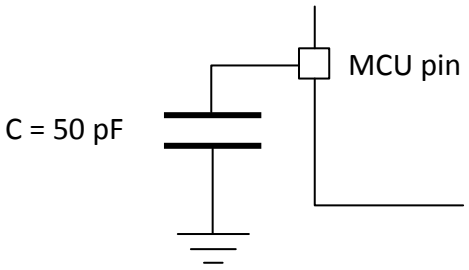

DT57473V1

6.1.5 Pin input voltage

The input voltage measurement on a pin of the device is described in the figure below.

Figure 13. Pin input voltage

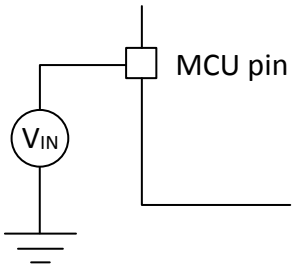

DT57474V1

6.2 Absolute maximum ratings

Stresses above the absolute maximum ratings listed in the tables below, may cause permanent damage to the device. These are stress ratings only and functional operation of the device at these conditions is not implied. Exposure to maximum rating conditions for extended periods may affect device reliability.

Table 9. Voltage characteristics

Symbol	Ratings	Min.	Max.	Unit
V_{DD1}, V_{DD2}, V_{DD3}, V_{DD4}, V_{DDRF}, V_{DDSD}	DC-DC converter supply voltage input and output	-0.3	+3.9	V
V_{DDA_VCAP}	DC voltage on linear voltage regulator	-0.3	+1.32	
FXTALOUT, FXTALIN	DC Voltage on HSE	-0.3	1.32	
PA0 to PA15, PB0 to PB15	DC voltage on digital input/output pins	-0.3	+3.9	
V_{LXSD}, V_{FBSD}	DC voltage on analog pins			
XTAL0/PB12, XTAL1/PB13	DC voltage on XTAL pins	-0.3	+3.6	
RF1	DC voltage on RF pin		+1.4	-
$\lvert\Delta V_{DD}\rvert$	Variations between different V_{DDX} power pins of the same domain	-	50	mV

Note: All the main power and ground pins must always be connected to the external power supply, in the permitted range.

Table 10. Current characteristics

Symbol	Ratings	Max.	Unit
ΣIV_{DD}	Total current into sum of all VDD power lines (source)	130	mA
ΣIV_{GND}	Total current out of sum of all ground lines (sink)	130	
$IV_{DD(PIN)}$	Maximum current into each VDD power pin (source)	100	
$IV_{GND(PIN)}$	Maximum current out of each ground pin (sink)	100	
$I_{IO(PIN)}$	Output current sunk by any I/O and control pin	20	
	Output current sourced by any I/O and control pin	20	
$\Sigma I_{IO(PIN)}$	Total output current sunk by sum of all I/Os and control pins	100	
	Total output current sourced by sum of all I/Os and control pins	100	
$\Sigma\lvert I_{INJ(PIN)}\rvert$	Total injected current (sum of all I/Os and control pins)	-5/0	

Table 11. Thermal characteristics

Symbol	Ratings	Value	Unit
T_{STG}	Storage temperature range	-40 to -125	°C
T_J	Maximum junction temperature	125	

6.3 Operating conditions

6.3.1 Summary of main performance

Table 12. Main performance SMPS ON

Symbol	Parameter	Test conditions	Typ. V_{DD} = 1.8 V	Typ. V_{DD} = 3.3 V	Unit
I_{CORE}	Core current consumption	SHUTDOWN	8	19	nA
		DEEPSTOP, no timer, wake-up GPIO, RAM0 retained	0.6	0.61	µA
		DEEPSTOP, no timer, wakeup GPIO, all RAM retained	0.63	0.64	
		DEEPSTOP (32 kHz LSI), RAM0 retained	1.06	1.12	
		DEEPSTOP (32 kHz LSI), all RAMs retained	1.09	1.15	
		DEEPSTOP (32 kHz LSE), RAM0 retained	0.85	0.96	
		DEEPSTOP (32 kHz LSE), all RAM retained	0.88	0.99	
		CPU in RUN (64 MHz). Dhrystone, clock source PLL64	-	2638	µA
		CPU in RUN (32 MHz). Dhrystone, clock source PLL64	-	2186	
		CPU in WFI (64 MHz), all peripherals off, clock source PLL64	-	1688	
		CPU in WFI (16 MHz), all peripherals off, clock source Direct HSE	-	1000	
		Radio RX at sensitivity level	-	3350	
		Radio TX 0 dBm output power	-	4300	
		Radio RX at sensitivity level with CPU in WFI (32 MHz), clock source Direct HSE	-	4950	
		Radio TX 0 dBm output power with CPU in WFI (32 MHz), clock source Direct HSE	-	5600	
$I_{DYNAMIC}$	Dynamic current	Computed value: (CPU 64 MHz Dhrystone - CPU 32 MHz Dhrystone) / 32	-	14	µA/MHz

Table 13. Main performance SMPS bypassed

Symbol	Parameter	Test conditions	Typ. V_{DD} = 1.8 V	Typ. V_{DD} = 3.3 V	Unit
I_{CORE}	Core current consumption	SHUTDOWN	8	19	nA
		DEEPSTOP, no timer, wake-up GPIO, RAM0 retained	0.6	0.61	µA
		DEEPSTOP, no timer, wake-up GPIO, all RAM retained	0.63	0.64	
		DEEPSTOP (32 kHz LSI), RAM0 retained	1.06	1.12	
		DEEPSTOP (32 kHz LSI), all RAMs retained	1.09	1.15	
		DEEPSTOP (32 kHz LSE), RAM0 retained	0.85	0.96	
		DEEPSTOP (32 kHz LSE), all RAM retained	0.88	0.99	
		CPU in RUN (64 MHz). Dhrystone, clock source PLL64	-	4450	
		CPU in WFI (64 MHz), all peripherals off, clock source PLL64	-	2313	
		CPU in WFI (16 MHz), all peripherals off, clock source Direct HSE	-	700	
		Radio RX at sensitivity level	-	6700	
		Radio TX 0 dBm output power	-	8900	
		Radio RX at sensitivity level with CPU in WFI (32MHz), clock source Direct HSE	-	9200	
		Radio TX 0 dBm output power with CPU in WFI (32MHz), clock source Direct HSE	-	11000	

Table 14. Peripheral current consumption at V_{DD} = 3.3 V, system clock (CLK_SYS), SMPS on

Parameter	Test conditions	Typ.	Unit
ADC	-	39	µA
DMA	-	37	
GPIOA	-	2	
GPIOB	-	2	
I2C1	-	38	
IWDG	-	9	
LPUART	-	53	
PKA	-	25	
RNG	-	88	
RTC	-	12	
SPI3/I2S3	-	46	
Systick	-	10	
TIM2	-	140	
TIM16	-	87	
TIM17	-	87	
USART	-	79	
SYSCFG	-	22	
CRC	-	8	

6.3.2 General operating conditions

Table 15. General operating conditions

Symbol	Parameter	Conditions	Min.	Max.	Unit
f_{HCLK}	Internal AHB clock frequency	-	1	64	MHz
f_{PCLK0}	Internal APB0 clock	-	1	64	
f_{PCLK1}	Internal APB1 clock frequency	-	1(1)	64	
f_{PCLK2}	Internal APB2 clock frequency	-	16	32	
V_{DD}	Standard operating voltage	-	1.7	3.6	V
V_{FBSMPS}	SMPS feedback voltage	-	1.4	3.6	
V_{DDRF}	Minimum RF voltage	-	1.7	3.6	
V_{IN}	I/O input voltage	-	-0.3	V_{DD}+0.3	
P_D	Power dissipation at T_A=105 °C(2)	QFN32 package	-	30	mW
T_A	Ambient temperature	Maximum power dissipation	-40	105	°C
T_J	Junction temperature range	-	-40	105	

1. *It could be 0 if all the peripherals are disabled.*
2. *T_A cannot exceed T_J max.*

6.3.3 RF general characteristics

All performance data are referred to a 50 Ω antenna connector, via reference design.

Table 16. Bluetooth Low Energy RF general characteristics

Symbol	Parameter	Test conditions	Min.	Typ.	Max.	Unit
F_{RANGE}	Frequency range(1)	-	2400	-	2483.5	MHz
RF_{CH}	RF channel center frequency(1)	-	2402	-	2480	
PLL_{RES}	RF channel spacing(1)	-	-	2	-	MHz
ΔF	Frequency deviation(1)	-	-	250	-	kHz
Δf1	Frequency deviation average(1)	-	450	-	550	kHz
C_{Fdev}	Center frequency deviation(1)	During the packet and including both initial frequency offset and drift	-	-	±150	kHz
Δfa	Frequency deviation Δf2 (average) / Δf1 (average)(1)	-	0.80	-	-	-
R_{gfsk}	On-air data rate(1)	-	1	-	2	Mbps
STacc	Symbol time accuracy(1)	-	-	-	±50	ppm
MOD	Modulation scheme	-	GFSK			-
BT	Bandwidth-bit period product	-	-	0.5	-	-
Mindex	Modulation index(1)	-	0.45	0.5	0.55	-
PMAX	Maximum output	At antenna connector, VSMPS = 1.9 V, LDO code	-	+8	-	dBm
PMIN	Minimum output	At antenna connector	-	-20	-	dBm
PRFC	RF power accuracy	@ 27 °C	-	±1.5	-	dB
		All temperatures	-	±2.5	-	

1. *Tested according to Bluetooth SIG radio frequency physical layer (RF PHY) test suite (not tested in production).*

6.3.4 RF transmitter characteristics

All performance data are referred to a 50 Ω antenna connector, via reference design.

Table 17. Bluetooth Low Energy RF transmitter characteristics at 1 Mbps not coded

Symbol	Parameter	Test conditions	Min.	Typ.	Max.	Unit
P_{BW1M}	6 dB bandwidth for modulated carrier	Using resolution bandwidth of 100 kHz	500	-	-	kHz
P_{RF1}, 1 Ms/s	In-band emission at ±2 MHz(1)	Using resolution bandwidth of 100 kHz and average detector	-	-46	-	dBm
P_{RF2}, 1 Ms/s	In-band emission at ±[3+n]MHz, where n=0,1,2..(1)	Using resolution bandwidth of 100 kHz and average detector	-	-46	-	dBm
PS_{PUR}	Spurious emission	Harmonics included. Using resolution bandwidth of 1 MHz and average detector	-	-	-41	dBm
$Freq_{drift}$	Frequency drift(1)	Integration interval #n – integration interval #0, where n=2,3,4..k	-50	-	+50	kHz
$IFreq_{drift}$	Initial carrier frequency drift(1)	Integration interval #1 – integration interval #0	-23	-	+23	kHz
$Int_{Freqdrift}$	Intermediate carrier frequency drift(1)	Integration interval #n – integration interval #(n-5), where n=6,7,8..k	-20	-	+20	kHz
Drift Rate max	Maximum drift rate(1)	Between any two 10-bit groups separated by 50 µs	-20	-	+20	kHz/50 µs
Z_{RF1}	Optimum RF load (impedance at RF1 pin)	@ 2440 MHz	-	40	-	Ω

1. *Tested according to Bluetooth SIG radio frequency physical layer (RF PHY) test suite (not tested in production).*

Table 18. Bluetooth Low Energy RF transmitter characteristics at 2 Mbps not coded

Symbol	Parameter	Test conditions	Min.	Typ.	Max.	Unit
P_{BW1M}	6 dB bandwidth for modulated carrier	Using resolution bandwidth of 100 kHz	670	-	-	kHz
P_{RF1}, 2 Ms/s	In-band emission at ±4 MHz(1)	Using resolution bandwidth of 100 kHz and average detector	-	-47	-	dBm
P_{RF2}, 2 Ms/s	In-band emission at±5 MHz(1)	Using resolution bandwidth of 100 kHz and average detector	-	-47	-	dBm
P_{RF3}, 2 Ms/s	In-band emission at ±[6+n]MHz, where n=0,1,2..(1)	Using resolution bandwidth of 100 kHz and average detector	-	-51	-	dBm
P_{SPUR}	Spurious emission	Harmonics included. Using resolution bandwidth of 1 MHz and average detector	-	-	-41	dBm
$Freq_{drift}$	Frequency drift(1)	Integration interval #n – integration interval #0, where n=2,3,4..k	-50	-	+50	kHz
$IFreq_{drift}$	Initial carrier frequency drift(1)	Integration interval #1 – integration interval #0	-23	-	+23	kHz
$IntFreq_{drift}$	Intermediate carrier frequency drift(1)	Integration interval #n – integration interval #(n-5), where n=6,7,8..k	-20	-	+20	kHz
$DriftRate_{max}$	Maximum drift rate(1)	Between any two 20-bit groups separated by 50 µs	-20	-	+20	kHz/50µs
Z_{RF1}	Optimum RF load (impedance at RF1 pin)	@ 2440 MHz	-	40	-	Ω

1. *Tested according to Bluetooth SIG radio frequency physical layer (RF PHY) test suite (not tested in production).*

Table 19. Bluetooth Low Energy RF transmitter characteristics at 1 Mbps LE coded (S=8)

Symbol	Parameter	Test conditions	Min.	Typ.	Max.	Unit
P_{BW}	6 dB bandwidth for modulated carrier	Using resolution bandwidth of 100 kHz	500	-	-	kHz
$P_{RF1, LE\ coded}$	In-band emission at ±2 MHz(1)	Using resolution bandwidth of 100 kHz and average detector	-	-46	-	dBm
$P_{RF2, LE\ coded}$	In-band emission at ±[3+n] MHz, where n=0,1,2..(1)	Using resolution bandwidth of 100 kHz and average detector	-	-46	-	dBm
PS_{PUR}	Spurious emission	Harmonics included. Using resolution bandwidth of 1 MHz and average detector	-	-	-41	dBm
$Freq_{drift}$	Frequency drift(1)	Integration interval #n – integration interval #0, where n=1,2,3..k	-50	-	+50	kHz
$IFreq_{drift}$	Initial carrier frequency drift(1)	Integration interval #3 – integration interval #0	-19.2	-	+19.2	kHz
$IntFreq_{drift}$	Intermediate carrier frequency drift(1)	Integration interval #n – integration interval #(n-3), where n=7,8,9..k	-19.2	-	+19.2	kHz
$DriftRate_{max}$	Maximum drift rate(1)	Between any two 16-bit groups separated by 48 µs	-19.2	-	+19.2	kHz/48 µs
Z_{RF1}	Optimum RF load (Impedance at RF1 pin)	@ 2440 MHz	-	40	-	Ω

1. *Tested according to Bluetooth SIG radio frequency physical layer (RF PHY) test suite (not tested in production).*

6.3.5 RF receiver characteristics

All performance data are referred to a 50 Ω antenna connector, via reference design.

Table 20. Bluetooth Low Energy RF receiver characteristics at 1 Msym/s uncoded

Symbol	Parameter	Test conditions	Min.	Typ.	Max.	Unit
RX_{SENS}	Sensitivity	PER < 30.8%	-	-97	-	dBm
P_{SAT}	Saturation	PER < 30.8%	-	8	-	dBm
Z_{RF1}	Optimum RF source (impedance at RF1 pin)	@ 2440 MHz	-	40	-	Ω
RF selectivity with BLE equal modulation on interfering signal						
$C/I_{CO\text{-}channel}$	Co-channel interference $f_{RX} = f_{interference}$	Wanted signal = -67 dBm, PER < 30.8%	-	8	-	dBc
$C/I_{1\ MHz}$	Adjacent interference $f_{interference} = f_{RX} \pm 1$ MHz	Wanted signal = -67 dBm, PER < 30.8%	-	-1	-	dBc
$C/I_{2\ MHz}$	Adjacent Interference $f_{interference} = f_{RX} \pm 2$ MHz	Wanted signal = -67 dBm, PER < 30.8%	-	-35	-	dBc
$C/I_{3\ MHz}$	Adjacent interference $f_{interference} = f_{RX} \pm (3+n)$ MHz [n = 0,1,2…]	Wanted signal = -67 dBm, PER < 30.8%	-	-47	-	dBc
C/I_{Image}	Image frequency interference $f_{interference} = f_{image}$	Wanted signal = -67 dBm, PER < 30.8%	-	-25	-	dBc
$C/I_{Image\pm1\ MHz}$	Adjacent channel-to-image frequency $f_{interference} = f_{image} \pm 1$ MHz	Wanted signal= -67 dBm, PER < 30.8%	-	-25	-	dBc
Out of band blocking (interfering signal CW)						

Symbol	Parameter	Test conditions	Min.	Typ.	Max.	Unit
C/I_{Block}	Interfering signal frequency 30 MHz – 2000 MHz	Wanted signal = -67 dBm, PER < 30.8%, measurement resolution 10 MHz	-	5	-	dB
C/I_{Block}	Interfering signal frequency 2003 MHz – 2399 MHz	Wanted signal = -67 dBm, PER < 30.8%, measurement resolution 3 MHz	-	-5	-	dB
C/I_{Block}	Interfering signal frequency 2484 MHz – 2997 MHz	Wanted signal = -67 dBm, PER < 30.8%, measurement resolution 3 MHz	-	-5	-	dB
C/I_{Block}	Interfering signal frequency 3000 MHz – 12.75 GHz	Wanted signal = -67 dBm, PER < 30.8%, measurement resolution 25 MHz	-	10	-	dB
Intermodulation characteristics (CW signal at f_1, BLE interfering signal at f_2)						
P_IM(3)	Input power of IM interferer at 3 and 6 MHz distance from wanted signal	Wanted signal = -64 dBm, PER < 30.8%	-	-27	-	dBm
P_IM(-3)	Input power of IM interferer at -3 and -6 MHz distance from wanted signal	Wanted signal = -64 dBm, PER < 30.8%	-	-40	-	dBm
P_IM(4)	Input power of IM interferer at ±4 and ±8 MHz distance from wanted signal	Wanted signal= -64 dBm, PER < 30.8%	-	-32	-	dBm
P_IM(5)	Input power of IM interferer at ±5 and ±10 MHz distance from wanted signal	Wanted signal = -64 dBm, PER < 30.8%	-	-32	-	dBm

Table 21. Bluetooth Low Energy RF receiver characteristics at 2 Msym/s uncoded

Symbol	Parameter	Test conditions	Min.	Typ.	Max.	Unit
RX_{SENS}	Sensitivity	PER < 30.8%	-	-94	-	dBm
P_{SAT}	Saturation	PER < 30.8%	-	8	-	dBm
Z_{RF1}	Optimum RF source (impedance at RF1 pin)	@ 2440 MHz	-	40	-	Ω
RF selectivity with BLE equal modulation on interfering signal						
$C/I_{CO\text{-}channel}$	Co-channel interference $f_{RX} = f_{interference}$	Wanted signal= -67 dBm, PER < 30.8%	-	8	-	dBc
$C/I_{2\ MHz}$	Adjacent interference $f_{interference} = f_{RX} \pm 2$ MHz	Wanted signal = -67 dBm, PER < 30.8%	-	-14	-	dBc
$C/I_{4\ MHz}$	Adjacent interference $f_{interference} = f_{RX} \pm 4$ MHz	Wanted signal = -67 dBm, PER < 30.8%	-	-41	-	dBc
$C/I_{6\ MHz}$	Adjacent interference $f_{interference} = f_{RX} \pm (6+2n)$ MHz [n = 0,1,2…]	Wanted signal = -67 dBm, PER < 30.8%	-	-45	-	dBc
C/I_{Image}	Image frequency interference $f_{interference} = f_{image\text{-}2M}$	Wanted signal = -67 dBm, PER < 30.8%	-	-25	-	dBc
$C/I_{Image\pm1\ MHz}$	Adjacent channel-to-image frequency $f_{interference} = f_{image\text{-}2M} \pm 2$ MHz	Wanted signal= -67 dBm, PER < 30.8%	- / -	-14	-	dBc
Out of band blocking (interfering signal CW)						
C/I_{Block}	Interfering signal frequency 30 MHz – 2000 MHz	Wanted signal= -67 dBm, PER < 30.8%, measurement resolution 10 MHz	-	5	-	dB
C/I_{Block}	Interfering signal frequency 2003 MHz – 2399 MHz	Wanted signal= -67 dBm, PER < 30.8%, measurement resolution 3 MHz	-	-5	-	dB
C/I_{Block}	Interfering signal frequency 2484 MHz – 2997 MHz	Wanted signal= -67 dBm, PER < 30.8%, measurement resolution 3 MHz	-	-5	-	dB

Symbol	Parameter	Test conditions	Min.	Typ.	Max.	Unit
C/I_{Block}	Interfering signal frequency 3000 MHz – 12.75 GHz	Wanted signal= -67 dBm, PER < 30.8%, measurement resolution 25 MHz	-	10	-	dB
Intermodulation characteristics (CW signal at f_1, BLE interfering signal at f_2)						
P_IM(6)	Input power of IM interferer at 6 and 12 MHz distance from wanted signal	Wanted signal= -64 dBm, PER < 30.8%	-	-27	-	dBm
P_IM(-6)	Input power of IM interferer at -6 and -12 MHz distance from wanted signal	Wanted signal= -64 dBm, PER < 30.8%	-	-30	-	dBm
P_IM(8)	Input power of IM interferer at ±8 and ±16 MHz distance from wanted signal	Wanted signal= -64 dBm, PER < 30.8%	-	-30	-	dBm
P_IM(10)	Input power of IM interferer at ±10 and ±20 MHz distance from wanted signal	Wanted signal= -64 dBm, PER < 30.8%	-	-28	-	dBm

Table 22. Bluetooth Low Energy RF receiver characteristics at 1 Msym/s LE coded (S=2)

Symbol	Parameter	Test conditions	Min.	Typ.	Max.	Unit
RX_{SENS}	Sensitivity	PER < 30.8%	-	-100	-	dBm
P_{SAT}	Saturation	PER < 30.8%		8	-	dBm
Z_{RF1}	Optimum RF source (impedance at RF1 pin)	@ 2440 MHz		40	-	Ω
RF selectivity with BLE equal modulation on interfering signal						
C/I_{CO}-channel	Co-channel interference $f_{RX} = f_{interference}$	Wanted signal = -72 dBm, PER < 30.8%	-	2	-	dBc
$C/I_{1\ MHz}$	Adjacent interference $f_{interference} = f_{RX} \pm 1$ MHz	Wanted signal = -72 dBm, PER < 30.8%		-5	-	dBc
$C/I_{2\ MHz}$	Adjacent interference $f_{interference} = f_{RX} \pm 2$ MHz	Wanted signal = -72 dBm, PER < 30.8%		-38	-	dBc
$C/I_{3\ MHz}$	Adjacent interference $f_{interference} = f_{RX} \pm (3+n)$ MHz [n = 0,1,2…]	Wanted signal = -72 dBm, PER < 30.8%		-50	-	dBc
C/I_{Image}	Image frequency interference $f_{interference} = f_{image}$	Wanted signal = -72 dBm, PER < 30.8%		-30	-	dBc
$C/I_{Image\pm1\ MHz}$	Adjacent channel-to-image frequency $f_{interference} = f_{image} \pm 1$ MHz	Wanted signal = -72 dBm, PER < 30.8%		-34	-	dBc

Table 23. Bluetooth Low Energy RF receiver characteristics at 1 Msym/s LE coded (S=8)

Symbol	Parameter	Test conditions	Min.	Typ.	Max.	Unit
RX_{SENS}	Sensitivity	PER < 30.8%	-	-104	-	dBm
P_{SAT}	Saturation	PER < 30.8%		8	-	dBm
Z_{RF1}	Optimum RF source (impedance at RF1 pin)	@ 2440 MHz		40	-	Ω
RF selectivity with BLE equal modulation on interfering signal						
$C/I_{CO\text{-}channel}$	Co-channel interference $f_{RX} = f_{interference}$	Wanted signal = -79 dBm, PER < 30.8%	-	1	-	dBc
$C/I_{1\ MHz}$	Adjacent interference $f_{interference} = f_{RX} \pm 1$ MHz	Wanted signal = -79 dBm, PER < 30.8%		-4	-	dBc
$C/I_{2\ MHz}$	Adjacent interference $f_{interference} = f_{RX} \pm 2$ MHz	Wanted signal = -79 dBm, PER < 30.8%		-39	-	dBc
$C/I_{3\ MHz}$	Adjacent interference $f_{interference} = f_{RX} \pm (3+n)$ MHz [n = 0,1,2…]	Wanted signal = -79 dBm, PER < 30.8%		-53	-	dBc
C/I_{Image}	Image frequency interference $f_{interference} = f_{image}$	Wanted signal = -79 dBm, PER < 30.8%		-33	-	dBc
$C/I_{Image} \pm 1$ MHz	Adjacent channel-to-image frequency $f_{interference} = f_{image} \pm 1$ MHz	Wanted signal = -79 dBm, PER < 30.8%		-32	-	dBc

6.3.6 Embedded reset and power control block characteristics

Table 24. Embedded reset and power control block characteristics

Symbol	Parameter	Test conditions	Min.	Typ.	Max.	Unit
TRSTTEMPO	Reset temporization after PDR is detected	V_{DD} rising	-	-	500	µs
VPDR	Power-down reset threshold	-	-	1.58	-	V
VPVD0	PVD0 threshold	PVD0 threshold at the falling edge of V_{DDIO}	-	2.05	-	
VPVD1	PVD1 threshold	PVD1 threshold at the falling edge of V_{DDIO}	-	2.21	-	
VPVD2	PVD2 threshold	PVD2 threshold at the falling edge of V_{DDIO}	-	2.36	-	
VPVD3	PVD3 threshold	PVD3 threshold at the falling edge of V_{DDIO}	-	2.53	-	
VPVD4	PVD4 threshold	PVD4 threshold at the falling edge of V_{DDIO}	-	2.64	-	
VPVD5	PVD5 threshold	PVD5 threshold at the falling edge of V_{DDIO}	-	2.82	-	
VPVD6	PVD6 threshold	PVD6 threshold at the falling edge of V_{DDIO}	-	2.91	-	
VPVD7	PVD threshold for V_{IN_PVD}	PVD7 threshold (VBGP) at the falling edge of V_{IN_PVD}	-	1	-	

6.3.7 Supply current characteristics

The current consumption is a function of several parameters and factors such as: the operating voltage, ambient temperature, I/O pin loading, device software configuration, operating frequencies, I/O pin switching rate, program location in memory and executed binary code.

The MCU is put under the following conditions:

- all I/O pins are in analog input mode
- all peripherals are disabled except when explicitly mentioned
- the flash memory access time is adjusted with the minimum wait states number
- when the peripherals are enabled $f_{PCLK} = f_{HCLK}$

Table 25. Current consumption

Symbol	Parameter	Conditions	Typ.			Unit
			25 °C	85 °C	105 °C	
I_{DD}(RUN)	Supply current in RUN mode(1)	f_{HCLK} = 64 MHz All peripherals disabled	2474	2533	2580	µA
		f_{HCLK} = 32 MHz All peripherals disabled	1919	1980	2029	
		f_{HCLK} = 16 MHz All peripherals disabled	1576	1632	1678	
I_{DD}(DEEPSTOP)	Supply current in DEEPSTOP(2)	Clock OFF	654	3930	8870	nA
		Clock source LSI	1214	4556	9530	
		Clock source LSI RTC ON	1272	4653	9674	
		Clock source LSI IWDG ON	1232	4584	9569	
		Clock source LSI RTC, LPUART and IWDG ON(3)	1291	4682	9722	
		Clock source LSE	991	4828	10596	
		Clock source LSE RTC ON	1010	4344	9316	
		Clock source LSE IWDG ON	971	4277	9242	
		Clock source LSE. LPUART ON	1076	4458	9426	
		Clock source LSE RTC, LUART and IWDG ON	1150	4585	9646	
I_{DD}(SHUTDOWN)	Supply current in SHUTDOWN	-	15	350	1090	
I_{DD}(RST)	Current under reset condition	-	1098	1160	1230	µA

1. *CPU executes a "while(1)" loop*
2. *The current consumption in DEEPSTOP is measured considering the entire SRAM retained.*
3. *LPUART not functional in deepstop mode with LSI (only LSE)*

6.3.8 Wake-up time from low power modes

The wake-up times reported are the latency between the event and the execution of the instruction. The device goes to low-power mode after WFI (wait for interrupt) instructions.

Table 26. Low power mode wake-up timing

Symbol	Parameter	Conditions	Typ.	Unit
$T_{WUDEEPSTOP}$	Wake-up time from DEEPSTOP mode to RUN mode	Wake-up from GPIO V_{DD} = 3.3 V flash memory	170	µs

6.3.9 High speed crystal requirements

The high speed external oscillator must be supplied with an external 32 MHz crystal that is specified for a 6 to 8 pF loading capacitor. The BlueNRG-LPS includes internal programmable capacitances that can be used to tune the crystal frequency in order to compensate the PCB parasitic one. These internal load capacitors are made by a fixed one, in parallel with a 6-bit binary weighted capacitor bank. Thanks to low CL step size (1-bit is typically 0.07 pF), very fine crystal tuning is possible. With a typical XTAL sensitivity of -14 ppm/pF, it is possible to trim a 32 MHz crystal, with a resolution of 1 ppm.

The requirements for the external 32 MHz crystal are reported in the table below.

Table 27. HSE crystal requirements

Symbol	Parameter	Conditions	Min.	Typ.	Max.	Unit
f_{NOM}	Oscillator frequency		-	32	-	MHz
f_{TOL}	Frequency tolerance	Includes initial accuracy, stability over temperature, aging and frequency pulling due to incorrect load capacitance	-	-	±50	ppm
ESR	Equivalent series resistance	-	-	-	100	Ω
P_D	Drive level	-	-	-	100	µW
CL	HSE crystal load capacitance	27 °C, typical corner GMCONF = 3	5 (1)	7(2)	9.2(3)	pF
CLstep	HSE crystal load capacitance 1-bit value	27 °C, GMCONF = 3 XOTUNE code between 32 and 33	-	0.07	-	pF

1. *XOTUNE programed at minimum code = 0*
2. *XOTUNE programed at center code = 32*
3. *XOTUNE programed at maximum code = 63*

6.3.10 Low speed crystal requirements

Low speed clock can be supplied with an external 32.768 kHz crystal oscillator. Requirements for the external 32.768 kHz crystal are reported in the table below.

Table 28. LSE crystal requirements

Symbol	Parameter	Conditions	Min.	Typ.	Max.	Unit
f_{NOM}	Nominal frequency	-	-	32.768	-	kHz
ESR	Equivalent series resistance	-	-	-	90	kΩ
P_D	Drive level	-	-	-	0.1	µW

6.3.11 High speed ring oscillator characteristics

Table 29. HSI oscillator characteristics

Symbol	Parameter	Conditions	Min.	Typ.	Max.	Unit
f_{NOM}	Nominal frequency	-	-	64	-	MHz

6.3.12 Low speed ring oscillator characteristics

Table 30. LSI oscillator characteristics

Symbol	Parameter	Conditions	Min.	Typ.	Max.	Unit
f_{NOM}	Nominal frequency	-	-	33	-	kHz
$\Delta F_{RO_\Delta T}/F_{RO}$	Frequency spread vs. temperature	Standard deviation	-	140	-	ppm/°C

6.3.13 PLL characteristics

Characteristics measured over recommended operating conditions unless otherwise specified.

Table 31. PLL characteristics

Symbol	Parameter	Conditions	Min.	Typ.	Max.	Unit
PN_{SYNTH}	RF carrier phase noise	At ±1 MHz offset from carrier (measured at 2.4 GHz)	-	-110	-	dBc/Hz
		At 2.4 GHz ±3 MHz offset from carrier (measured at 2.4 GHz)	-	-114	-	dBc/Hz
		At 2.4 GHz±6 MHz offset from carrier (measured at 2.4 GHz)	-	-128	-	dBc/Hz
		At ±25 MHz offset from carrier	-	-135	-	dBc/Hz
$LOCK_{TIMETX}$	PLL lock time to TX	With calibration @2.5 ppm	-	150	-	µs
$LOCK_{TIMERX}$	PLL lock time to RX	With calibration @2.5 ppm	-	110	-	µs
$LOCK_{TIMERXTX}$	PLL lock time RX to TX	Without calibration @2.5 ppm	-	47	-	µs
$LOCK_{TIMETXRX}$	PLL lock time TX to RX	Without calibration @2.5 ppm	-	32	-	µs

6.3.14 Flash memory characteristics

The characteristics below are guaranteed by design.

Table 32. Flash memory characteristics

Symbol	Parameter	Test conditions	Typ.	Max.	Unit
t_{prog}	32-bit programming time	-	20	40	µs
t_{prog_burst}	4x32-bit burst programming time	-	4x20	4x40	
t_{ERASE}	Page (2 kbyte) erase time	-	20	40	ms
t_{ME}	Mass erase time	-	20	40	
I_{DD}	Average consumption from V_{DD}	Write mode	3	-	mA
		Erase mode	3	-	
		Mass erase	5	-	

Table 33. Flash memory endurance and data retention

Symbol	Parameter	Test conditions	Min.	Unit
N_{END}	Endurance	T_A = -40 to +105 °C	10	kcycles
t_{RET}	Data retention	T_A = 105 °C	10	Years

6.3.15 Electrostatic discharge (ESD)

Electrostatic discharges (a positive then a negative pulse separated by 1 second) are applied to the pins of each sample according to each pin combination. The sample size depends on the number of supply pins in the device (3 parts x (n + 1) supply pins). This test conforms to the ANSI/JEDEC standard.

Table 34. ESD absolute maximum ratings

Symbol	Parameter	Conditions	Class	Max.(1)	Unit
$V_{ESD(HBM)}$	Electrostatic discharge voltage (human body model)	Conforming to ANSI/ESDA/JEDEC JS-001	2	2000	V
$V_{ESD(CBM)}$	Electrostatic discharge voltage (charge device model)	Conforming to ANSI/ESDA/STM5.3.1 JS-002	C2a	500	

1. *Guaranteed by design.*

6.3.16 I/O port characteristics

Unless otherwise specified, the parameters given in the tables below are derived from tests performed under the conditions summarized in Table 15. General operating conditions. All I/Os are designed as CMOS-compliant.

Table 35. I/O static characteristics

Symbol	Parameter	Conditions	Min.	Typ.	Max.	Unit
V_{IL}	I/O input low level voltage	1.62 V < V_{DD} < 3.6 V	-	-	0.3 x V_{DD}	V
V_{IH}	I/O input high level voltage		0.7 x V_{DD}	-	-	
I_{lkg}	Input leakage current	0 <= V_{IN} <= Max(V_{DDx})(1)	-	-	+/-100	nA
		Max(V_{DDx})(1) <= V_{IN} <= Max(V_{DDx})(1) +1 V	-	-	650	
		Max(V_{DDx})(1) + 1 V < V_{IN} <= 5.5 V	-	-	200	
R_{PU}	Pull-up resistor	V_{IN} = GND	25	40	55	kΩ
R_{PD}	Pull-down resistor	V_{IN} = VDD	25	40	55	
C_{IO}	I/O pin capacitance	-	-	5	-	pF

1. *Max(V_{DDx}) is the maximum value among all the I/O supplies.*

All I/Os are CMOS-compliant (no software configuration required).

GPIOs (general purpose input/outputs) can sink or source up to ±8 mA and sink or source up to ± 20 mA (with a relaxed V_{OL} / V_{OH}).

In the user application, the number of I/O pins that can drive current must be limited to respect the absolute maximum rating specified.

- The sum of currents sourced by all I/Os on VDD, plus the maximum consumption of MCU sourced on VDD, cannot exceed the absolute maximum rating ΣIVDD
- The sum of currents sunk by all I/Os on VSS, plus the maximum consumption of the MCU sunk on GND, cannot exceed the absolute maximum rating ΣIVGND.

Table 36. Output voltage characteristics

Symbol	Parameter	Conditions	Min.	Max.	Unit
V_{OL}	Output low level voltage for I/O pin	CMOS port(1) |IIO| = 8 mA VDD ≥ 2.7 V	-	0.4	V
V_{OH}	Output high level voltage for I/O pin		VDD -0.4	-	
V_{OL}	Output low level voltage for I/O pin	|IIO| = 20 mA VDD ≥ 2.7 V	-	1.3	
V_{OH}	Output high level voltage for I/O pin		VDD -1.3	-	
V_{OL}	Output low level voltage for I/O pin	|IIO| = 4 mA VDD ≥ 1.62 V	-	0.4	
V_{OH}	Output high level voltage for I/O pin		VDD-0.45	-	

1. *CMOS outputs are compatible with JEDEC standards JESD36 and JESD52.*

6.3.17 RSTN pin characteristics

The RSTN pin input driver uses CMOS technology. It is connected to a permanent pull-up resistor, RPU.

Unless otherwise specified, the parameters given in the table below are derived from tests performed under the ambient temperature and supply voltage conditions summarized in Section 6.3.2: General operating conditions.

Table 37. RSTN pin characteristics

Symbol	Parameter	Test conditions	Min.	Typ.	Max.	Unit.
$V_{IL(RSTN)}$	RSTN input low level voltage	-	-	-	0.3 x V_{DD}	V
$V_{IH(RSTN)}$	RSTN input high level voltage	-	0.7 x V_{DD}	-	-	
$V_{hys(RSTN)}$	RSTN Schmitt trigger voltage hysteresis	-	-	200	-	mV
RPU	Weak pull-up equivalent resistor	V_{IN}=GND	25	40	55	kΩ

Figure 14. Recommended RSTN pin protection

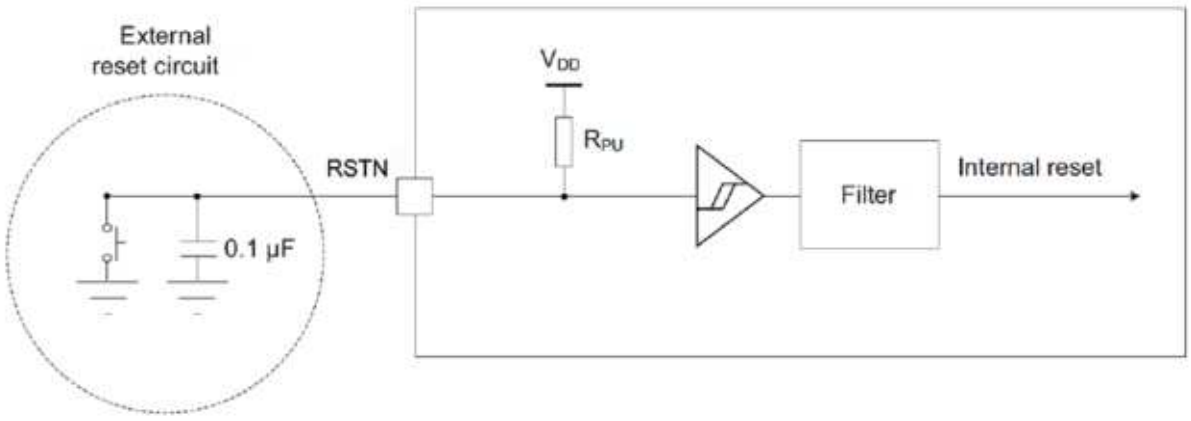

DT57475V1

Note: The external reset circuit protects the device against parasitic resets.

The user must ensure that the level on the RSTN pin can go below the V_{IL}(RSTN) max. level specified in the table, otherwise the reset is not taken into account by the device. The external capacitor on RSTN must be placed as close as possible to the device.

6.3.18 ADC characteristics

Table 38. ADC characteristics (HSI must be set to PLL mode)

Symbol	Parameter	Test conditions	Min.	Typ.	Max.	Units
Channels Diff	Number of channels for differential mode	QFN32, WLCSP36	-	-	4	-
Channels SE	Number of channels for single ended mode	QFN32, WLCSP36	-	-	8	-
$IBAT_{ADCBIAS}$	ADC biasing consumption at battery	Biasing blocks turned on	-	145	-	µA
$IBAT_{ADCACTIVE}$	ADC active consumption at battery	ADC activated in differential mode	-	185	-	µA
V_{DDA_VCAP}	Analog supply voltage	-	1.2	-	1.32	V
R_{AIN}	Input impedance	In DC	-	250	-	kΩ
R_{in}	Internal access resistance	VBOOST is enabled for VDD < 2.7 V	-	-	550	Ω
C_{in}	Input sampling capacitor	-	-	4	-	pF
T_s	Sampling period	Default configuration	-	1	-	µs
T_{sw}	Sampling time	Default configuration	-	125	-	ns
DR	Output data rate	-	-	200	-	k samples/s
$FRMT_{output}$	Output data format	-	-	16	-	bits
TL	Latency time	200 kSps	-	5	-	µs
$T_{STARTUP}$	Start-up time	From ADC enable to conversion start	-	-	1	µs
DNL	Differential non-linearity	-	-	±0.7	-	bit
INL	Integral non-linearity	-	-	±1	-	bit
SNR Diff	Signal to noise ratio	Differential input @1 kHz, -1 dBFs, Fs = 800 kHz, DS=4	-	72	-	dB
STHD Diff	Signal to THD ratio (10 harmonics)	Differential input @1 kHz, -1 dBFs, Fs = 800 kHz, DS = 4	-	75	-	dB
ENOB Diff	Effective number of bits	Differential input @1 kHz, -1 dBFs, Fs = 800 kHz, DS = 4	-	11.5	-	bits
SNR SE	Signal-to-noise ratio	Single ended @1 kHz, -1 dBFs, Fs = 800 kHz, DS = 4	-	70	-	dB
STHD SE	Signal-to THD ratio (10 harmonics)	Single ended @1 kHz, -1 dBFs, Fs = 800 kHz, DS = 4	-	70	-	dB
ENOB SE	Effective number of bits	Single ended @1 kHz, -1 dBFs, Fs = 800 kHz, DS = 4	-	11	-	bits
-	ADC_ERR_1V7	Absolute error when used for battery measurements at 1.7 V, 2.4 V, 3.0 V, 3.6 V	-	13	-	mV
-	ADC_ERR_2V4		-	0	-	
-	ADC_ERR_3V0		-	-9	-	

Symbol	Parameter	Test conditions	Min.	Typ.	Max.	Units
-	ADC_ERR_3V6	Absolute error when used for battery measurements at 1.7 V, 2.4 V, 3.0 V, 3.6 V	-	-22	-	mV

6.3.19 Temperature sensor characteristics

Table 39. Temperature sensor characteristics

Symbol	Parameter	Conditions	Min.	Typ.	Max.	Unit
T_{rERR}	Error in temperature	-	-	±4	-	°C
T_{SLOPE}	Average temperature coefficient	-	-	8	-	bit/°C
T_{ICC}	Current consumption with AUXADC	-	-	415	-	µA
T_{TS-OUT}	Output code at 30 °C (+/-5 °C)	-	-	2533	-	bit

6.3.20 Timer characteristics

Table 40. TIM2/16/17 characteristics

Symbol	Parameter	Test conditions	Min.	Typ.	Max.	Unit
$t_{res(TIM)}$	Timer resolution time	$f_{TIMxCLK}$ = 64 MHz	-	15.625	-	ns
R_{esTIM}	Timer resolution	-	-	16	-	bit
$t_{COUNTER}$	16-bit counter clock period	$f_{TIMxCLK}$ = 64 MHz	0.015625	-	1024	µs
t_{MAX_COUNT}	Maximum possible count time	$f_{TIMxCLK}$= 64	-	-	67.10	s

Table 41. IWDG min./max. timeout period at 32 kHz (LSE)

Prescaler divider	PR[2:0] bits	Min. timeout RL[11:0] = 0x000	Max. timeout RL[11:0] = 0xFFF	Unit
/4	0	0.125	512	ms
/8	1	0.250	1024	
/16	2	0.500	2048	
/32	3	1.0	4096	
/64	4	2.0	8192	
/128	5	4.0	16384	
/256	6 or 7	8.0	32768	

6.3.21 I²C interface characteristics

The I²C interface meets the timing requirements of the I²C-Bus specifications and user manual rev. 03 for:

- Standard-mode (Sm): bit rate up to 100 kbit/s
- Fast-mode (Fm): bit rate up to 400 kbit/s
- Fast-mode plus (Fm+): bit rate up to 1 Mbit/s

SDA and SCL I/O requirements are met with the following restrictions: SDA and SCL I/O pins are not “true” open-drain. When configured as open-drain, the PMOS connected between the I/O pin and V_{DD} is disabled, but is still present. The 20 mA output drive requirement in fast-mode plus is supported partially.

This limits the maximum load C_{load} supported in fast-mode plus, given by these formulas:

- $t_r(SDA/SCL) = 0.8473 \times R_p \times C_{load}$
- $R_p(min.) = [V_{DD} - V_{OL}(max)] / I_{OL}(max)$

where R_p is the I²C lines pull-up.

All I²C SDA and SCL I/Os embed an analog filter.

Table 42. I²C analog filter characteristics

Symbol	Parameter	Min.	Max.	Unit
t_{AF}	Maximum pulse width of spikes that are suppressed by the analog filter	50	110	ns

6.3.22 SPI characteristics

The parameters for SPI are derived from tests performed according to f_{PCLKx} frequency and supply voltage conditions summarized in Table 15. General operating conditions.

- Output speed is set to OSPEEDRy[1:0] = 11
- Capacitive load C = 30 pF
- Measurement points are done at CMOS levels: 0.5 x V_{DD}

Table 43. SPI characteristics

Symbol	Parameter	Conditions	Min.	Typ.	Max.	Units
f_{SCK}	SPI clock frequency	Master mode	-	-	32	MHz
		Slave mode			32(1)	
tsu(NSS)	NSS setup time	-	4 / f_{PCLK}	-	-	-
th(NSS)	NSS hold time	-	2 / f_{PCLK}	-	-	-
tw(SCKH), tw(SCKL)	SCK high and low time	Master mode	1 / f_{PCLK} - 1.5	1 / f_{PCLK}	1 / f_{PCLK}+1	ns
tsu(MI)	Data input set-up time	Master mode	2	-	-	
tsu(SI)	Data input set-up time	Slave mode	1	-	-	
th(MI)	Data input hold time	Master mode	2	-	-	
th(SI)	Data input hold time	Slave mode	0	-	-	
$t_{a(SO)}$	Data output access time	Slave mode	6	-	30	
$t_{dis(SO)}$	Data output disable time	Slave mode	6	-	32	
$t_{v(MO)}$	Data output valid time	Master mode	-	5	9	
$t_{v(SO)}$		Slave mode	-	12	35	
$t_{h(MO)}$	Data output hold time	Master mode	1	-	-	
$t_{h(SO)}$		Slave mode	6	-		

1. *The maximum frequency in slave transmitter mode is determined by the sum of tv(SO) and tsu(MI), which has to fit SCK low or high phase preceding the SCK sampling edge. This value can be achieved when the SPI communicates with a master having tsu(MI) = 0 while duty(SCK) = 50 %.*

Figure 15. SPI timing diagram - slave mode and CPHA = 0

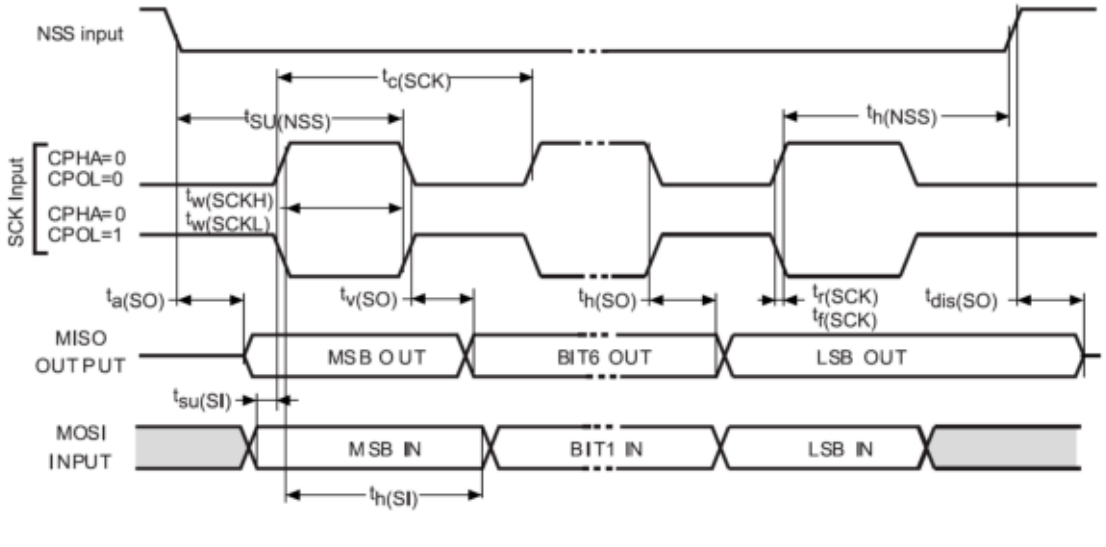

Figure 16. SPI timing diagram - slave mode and CPHA = 1

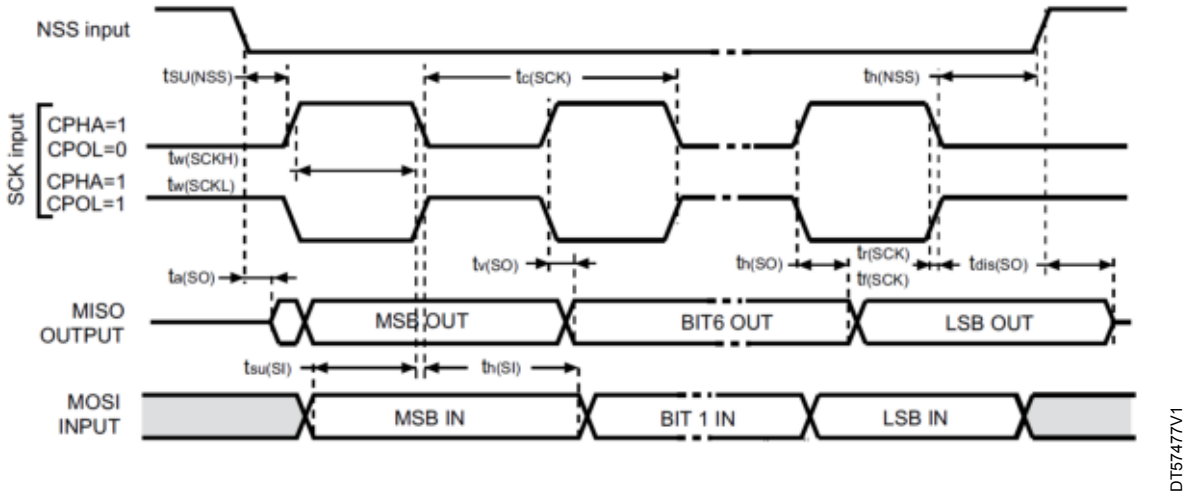

Figure 17. **SPI timing diagram - master mode**

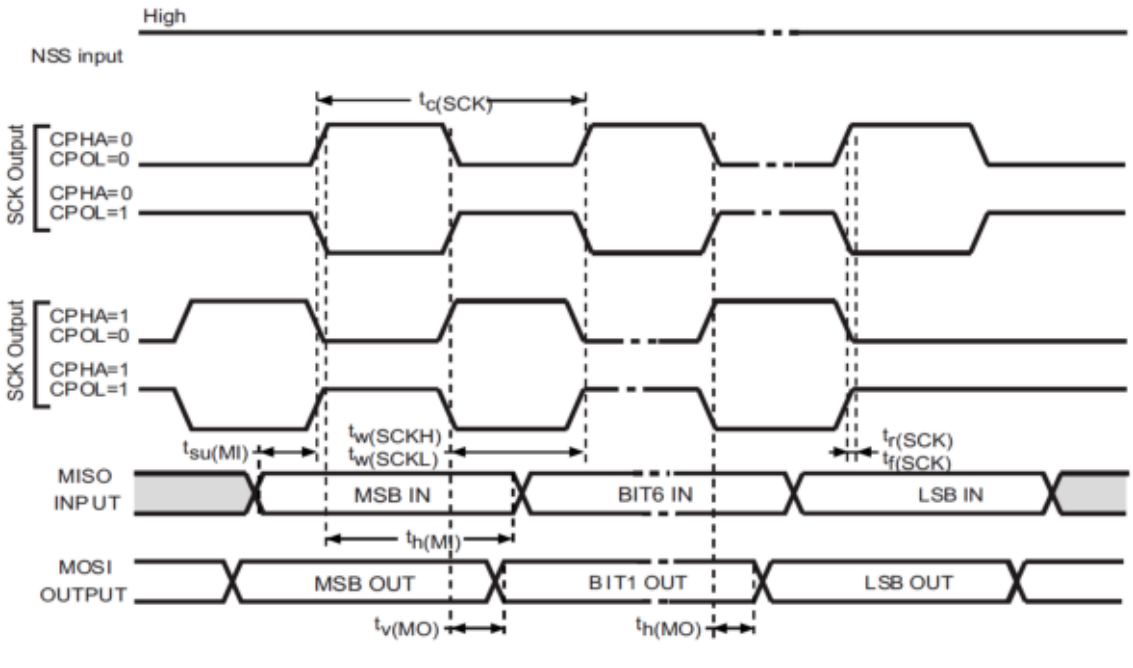

7 Package information

In order to meet environmental requirements, ST offers these devices in different grades of ECOPACK packages, depending on their level of environmental compliance. ECOPACK specifications, grade definitions and product status are available at: www.st.com. ECOPACK is an ST trademark.

7.1 VFQFPN32 package information (42)

This VFQFPN is a 32 lead, 5 x 5 mm, 0.50 mm pitch, very fine pitch quad flat no lead package.

Figure 18. VFQFPN32 - Outline

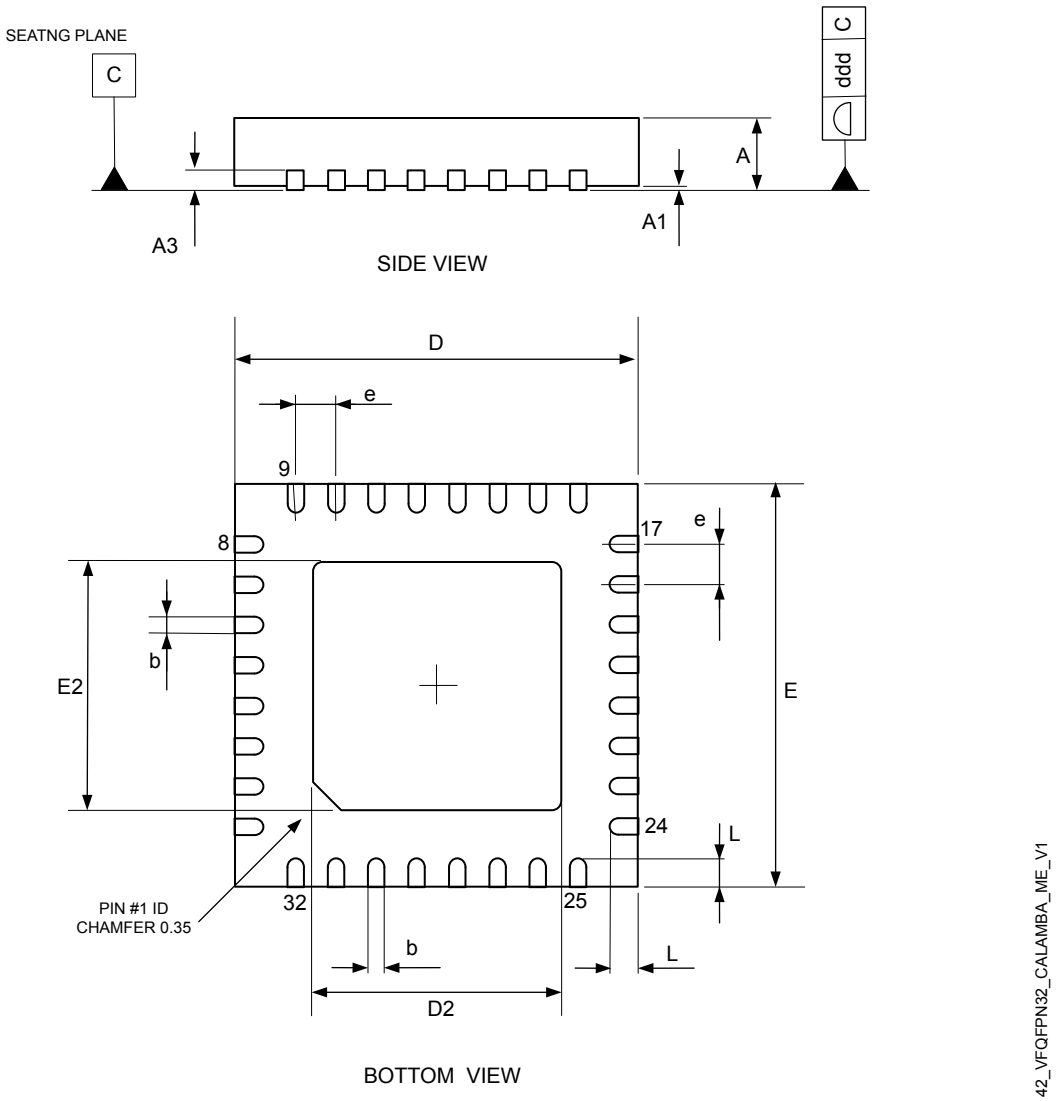

1. *Drawing is not to scale.*

Table 44. **VFQFPN32 - Mechanical data**

Symbol	Millimetres			Inches[1]		
	Min	Typ	Max	Min	Typ	Max
A	0.80	0.90	1.00	0.0315	0.0354	0.0394
A1	-	0.02	0.05	-	0.0008	0.0020
b	0.18	0.25	0.30	0.0071	0.0098	0.0118
D	4.85	5.00	5.15	0.1909	0.1969	0.2028
E	4.85	5.00	5.15	0.1909	0.1969	0.2028
D2	3.65	-	3.95	0.1437	-	0.1555
E2	3.65	-	3.95	0.1437	-	0.1555
e	-	0.50	-	-	0.0197	-
L	0.30	0.40	0.50	0.0118	0.0157	0.0197

1. *Values in inches are converted from mm and rounded to 3 decimal digits.*

Figure 19. **VFQFPN32 - Footprint example**

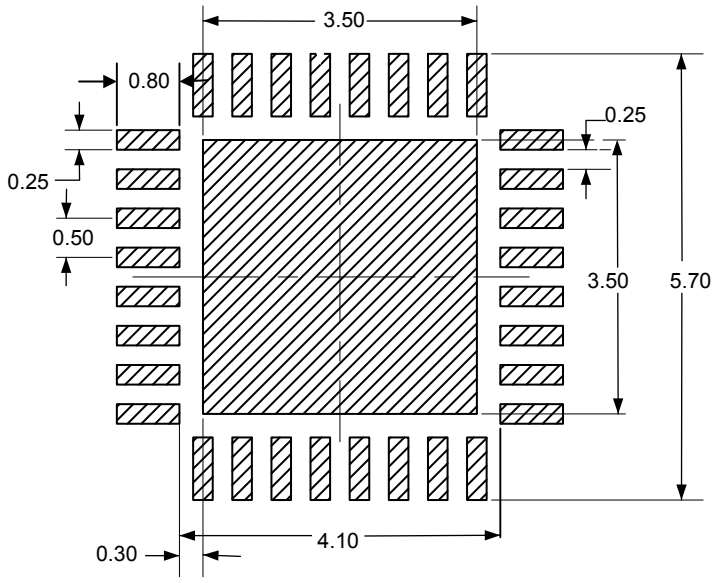

7.2 WLCSP36 package information (01C1)

This WLCSP is a 36-ball, 2.652 x 2.592 mm, 0.40 mm pitch, wafer level chip scale array package.

Figure 20. WLCSP36 - Outline

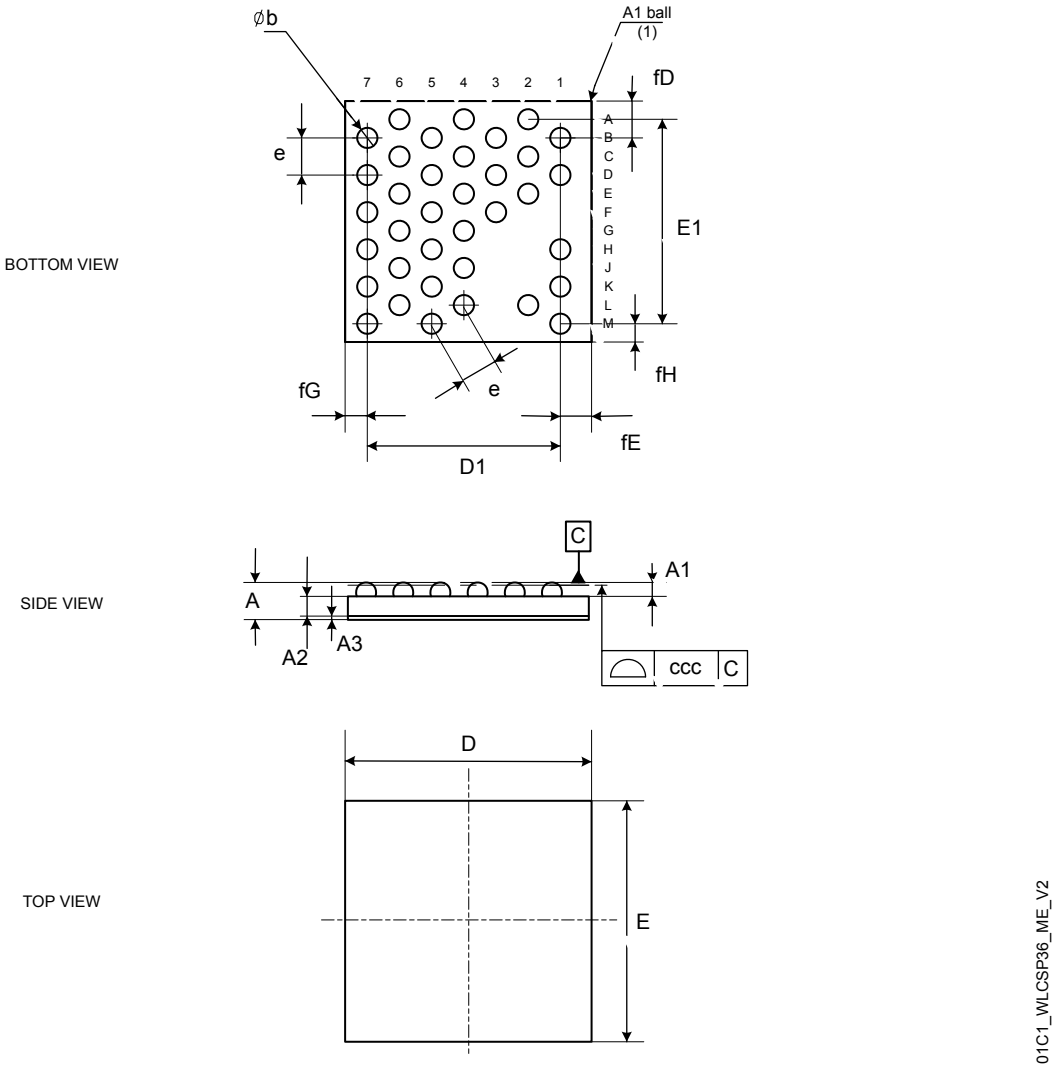

1. *The terminal A1 on the bumps side is identified by a distinguishing feature (for instance by a circular "clear area" - typically 0.1 mm diameter) and/or a missing bump.*
   The terminal A1 on the backside of the product is identified by a distinguishing feature (for instance by a circular "clear area" - typically 0.5 mm diameter).
2. *Drawing is not to scale.*

Table 45. WLCSP36 - Mechanical data

Symbol	millimeters			inches[1]		
	Min	Typ	Max	Min	Typ	Max
A	-	-	0.422	-	-	0.0166
A1	0.135	-	-	0.0053	-	-
A2	-	0.225	-	-	0.0088	-
A3	-	0.025	-	-	0.0010	-
b	0.193	0.218	0.243	0.0076	0.0085	0.0096
D	-	2.6525	-	-	0.1044	-
D1	-	2.078	-	-	0.0818	-
E	-	2.5925	-	-	0.1020	-
E1	-	2.200	-	-	0.0866	-
e	-	0.40	-	-	0.0157	-
fD	-	0.397	-	-	0.0156	-
fE	-	0.335	-	-	0.0132	-
fG	-	0.239	-	-	0.0094	-
fH	-	0.196	-	-	0.0077	-
ccc	-	0.030	-	-	0.0012	-

1. *Values in inches are converted from mm and rounded to 4 decimal digits.*

Figure 21. WLCSP36 - Footprint example

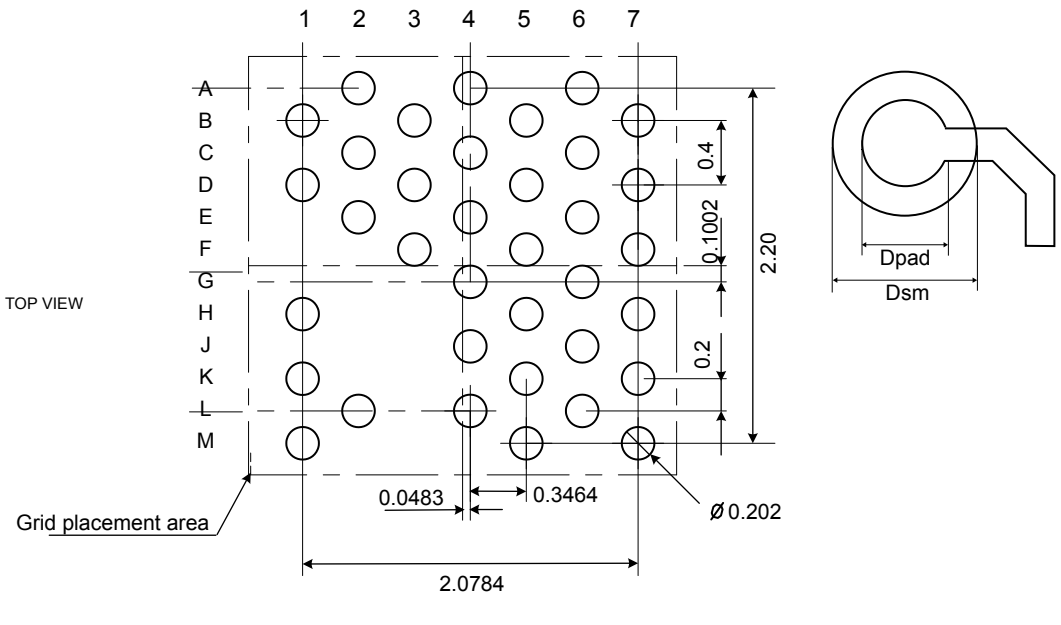

1. *Dimensions are expressed in millimeters.*

Table 46. **WLCSP36 - Example of PCB design rules**

Dimension	Values
Pitch	0.4 mm
Dpad	0.225 mm
Dsm	0.290 mm typ. (depends on soldermask registration tolerance)
Stencil opening	0.250 mm
Stencil thickness	0.100 mm

7.3 Thermal characteristics

The maximum chip junction temperature ($T_{Jmax.}$) must never exceed the values in general operating conditions.

The maximum chip-junction temperature, T_J max., in degrees Celsius, can be calculated using the equation:

$$T_J\text{max.} = T_A\text{max.} + (PD\text{max} \times \theta JA) \quad (1)$$

where:

- T_A max. is the maximum ambient temperature in °C
- Θ_{JA} is the package junction-to-ambient thermal resistance, in °C/W
- PD max. is the sum of PINT max. and PI/O max. (PD max. = PINT max. + PI/O max.)
- PINT max. is the product of I_{DD} and V_{DD}, expressed in Watts. This is the maximum chip internal power

PI/O max represents the maximum power dissipation on output pins:

- PI/O max. = Σ (V_{OL} × I_{OL}) + Σ ((V_{DD} – V_{OH}) × I_{OH})

taking into account the actual V_{OL} / I_{OL} and V_{OH} / I_{OH} of the I/Os at low and high level in the applications.

Note: When the SMPS is used, a portion of the power consumption is dissipated into the external inductor, therefore reducing the chip power dissipation. This portion depends mainly on the inductor ESR characteristics.

Note: As the radiated RF power is quite low (< 4 mW), it is not necessary to remove it from the chip power consumption.

Note: RF characteristics (such as: sensitivity, Tx power, consumption) are provided up to 85 °C.

Table 47. Package thermal characteristics

Symbol	Parameter	Value	Unit
Θ_{JA}	Thermal resistance junction-ambient QFN32 - 5 mm x 5 mm	26.9	°C/W
	Thermal resistance junction-ambient WLCSP36 - 0.4 mm pitch	-	

8 Ordering information

Table 48. Ordering information

Order code	Package	Packing
BLUENRG-332xy	QFN32, WLCSP36	Tape and reel

Figure 22. Ordering information

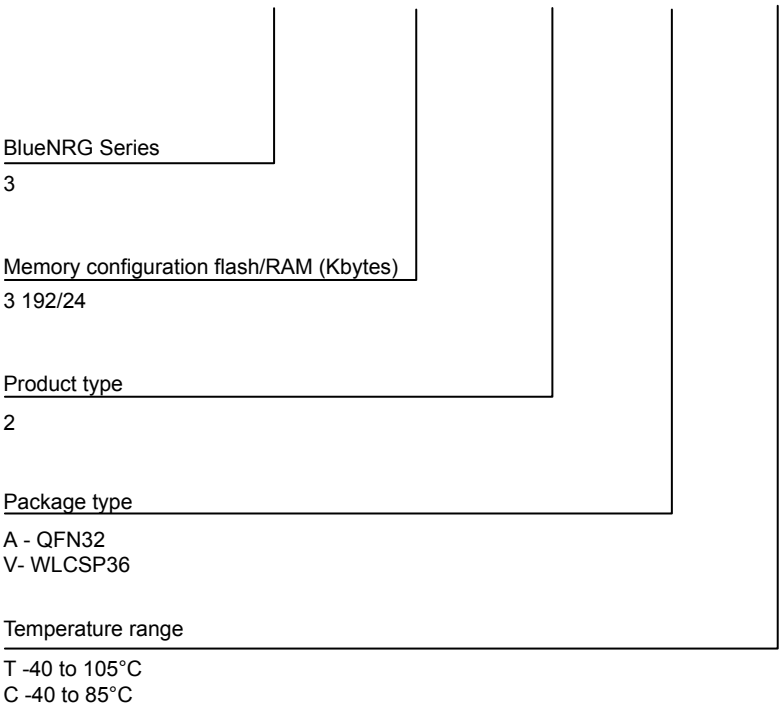

Note: For a list of available options (memory, package, and so on) or for further information on any aspect of this device, contact your nearest ST sales office.

Important security notice

The STMicroelectronics group of companies (ST) places a high value on product security, which is why the ST product(s) identified in this documentation may be certified by various security certification bodies and/or may implement our own security measures as set forth herein. However, no level of security certification and/or built-in security measures can guarantee that ST products are resistant to all forms of attacks. As such, it is the responsibility of each of ST's customers to determine if the level of security provided in an ST product meets the customer needs both in relation to the ST product alone, as well as when combined with other components and/or software for the customer end product or application. In particular, take note that:

- ST products may have been certified by one or more security certification bodies, such as Platform Security Architecture (www.psacertified.org) and/or Security Evaluation standard for IoT Platforms (www.trustcb.com). For details concerning whether the ST product(s) referenced herein have received security certification along with the level and current status of such certification, either visit the relevant certification standards website or go to the relevant product page on www.st.com for the most up to date information. As the status and/or level of security certification for an ST product can change from time to time, customers should re-check security certification status/level as needed. If an ST product is not shown to be certified under a particular security standard, customers should not assume it is certified.
- Certification bodies have the right to evaluate, grant and revoke security certification in relation to ST products. These certification bodies are therefore independently responsible for granting or revoking security certification for an ST product, and ST does not take any responsibility for mistakes, evaluations, assessments, testing, or other activity carried out by the certification body with respect to any ST product.
- Industry-based cryptographic algorithms (such as AES, DES, or MD5) and other open standard technologies which may be used in conjunction with an ST product are based on standards which were not developed by ST. ST does not take responsibility for any flaws in such cryptographic algorithms or open technologies or for any methods which have been or may be developed to bypass, decrypt or crack such algorithms or technologies.
- While robust security testing may be done, no level of certification can absolutely guarantee protections against all attacks, including, for example, against advanced attacks which have not been tested for, against new or unidentified forms of attack, or against any form of attack when using an ST product outside of its specification or intended use, or in conjunction with other components or software which are used by customer to create their end product or application. ST is not responsible for resistance against such attacks. As such, regardless of the incorporated security features and/or any information or support that may be provided by ST, each customer is solely responsible for determining if the level of attacks tested for meets their needs, both in relation to the ST product alone and when incorporated into a customer end product or application.
- All security features of ST products (inclusive of any hardware, software, documentation, and the like), including but not limited to any enhanced security features added by ST, are provided on an "AS IS" BASIS. AS SUCH, TO THE EXTENT PERMITTED BY APPLICABLE LAW, ST DISCLAIMS ALL WARRANTIES, EXPRESS OR IMPLIED, INCLUDING BUT NOT LIMITED TO THE IMPLIED WARRANTIES OF MERCHANTABILITY OR FITNESS FOR A PARTICULAR PURPOSE, unless the applicable written and signed contract terms specifically provide otherwise.

Revision history

Table 49. **Document revision history**

Date	Version	Changes
09-Dec-2021	1	Initial release.
13-Apr-2022	2	Updated Table 9. Voltage characteristics, Table 38. ADC characteristics (HSI must be set to PLL mode) and Table 24. Embedded reset and power control block characteristics.
02-Mar-2023	3	Added reference to integrated passive device (IPD) in Features section. In description section, mentioned that the 7 Kbyte ROM is an ST reserved area. Added Section 2.5.2: IPDs for BlueNRG-LPS. Updated Section 7.1: VFQFPN32 package information (42) and Figure 18. VFQFPN32 - Outline.
24-Mar-2023	4	Corrected Section 7.2: WLCSP36 package information (01C1). Added reference to ANTENNA_ID[2] for PB2 pin in Table 4. Pin descriptions. Updated Table 17. Bluetooth Low Energy RF transmitter characteristics at 1 Mbps not coded. Updated Table 18. Bluetooth Low Energy RF transmitter characteristics at 2 Mbps not coded. Updated Table 19. Bluetooth Low Energy RF transmitter characteristics at 1 Mbps LE coded (S=8).
28-Nov-2023	5	Corrected WLCSP36 package dimensions on cover-page image. Removed reference to ATx from Section 3: Pinouts and pin description and Section 5: Application circuits. Corrected PB15 alternate function to "USART_TX" in Table 4. Pin descriptions.
01-Feb-2024	6	Updated: • Table 22. Bluetooth Low Energy RF receiver characteristics at 1 Msym/s LE coded (S=2) • Table 25. Current consumption
21-Oct-2024	7	Updated: • Figure 19. VFQFPN32 - Footprint example • Figure 20. WLCSP36 - Outline (added label for dimension "D") • Table 45. WLCSP36 - Mechanical data
20-Jul-2026	8	Updated Section Features and Section 1: Introduction. Updated Table 4. Pin descriptions and Table 5. Legend/abbreviations used in the pinout table.

Contents

1 **Introduction** 5
2 **Functional overview** 6
2.1 System architecture 6
2.2 Arm Cortex-M0+ core with MPU 7
2.3 Memories 7
2.3.1 Embedded flash memory 7
2.3.2 Embedded SRAM 7
2.3.3 Embedded ROM 7
2.3.4 Embedded OTP 7
2.3.5 Memory protection unit (MPU) 8
2.4 Security and safety 8
2.5 RF subsystem 8
2.5.1 RF front-end block diagram 8
2.5.2 IPDs for BlueNRG-LPS 9
2.6 Power supply management 10
2.6.1 SMPS step-down regulator 10
2.6.2 Power supply schemes 10
2.6.3 Linear voltage regulators 11
2.6.4 Power supply supervisor 11
2.7 Operating modes 12
2.7.1 RUN mode 12
2.7.2 DEEPSTOP mode 12
2.7.3 SHUTDOWN mode 14
2.8 Reset management 14
2.9 Clock management 15
2.10 Boot mode 17
2.11 Embedded UART bootloader 17
2.12 General purpose inputs/outputs (GPIO) 17
2.13 Direct memory access (DMA) 17
2.14 Nested vectored interrupt controller (NVIC) 18
2.15 Analog digital converter (ADC) 18
2.15.1 Temperature sensor 18
2.16 True random number generator (RNG) 19
2.17 Timers and watchdog 19
2.17.1 General-purpose timers (TIM2, TIM16, TIM17) 19

2.17.2 Independent watchdog (IWDG) . . . 19
2.17.3 SysTick timer . . . 19
2.18 Real-time clock (RTC) . . . 19
2.19 Inter-integrated circuit interface (I^2C) . . . 20
2.20 Universal synchronous/asynchronous receiver transmitter (USART) . . . 20
2.21 LPUART . . . 20
2.22 Serial peripheral interface (SPI) . . . 21
2.23 Inter-IC sound (I2S) . . . 21
2.24 Serial wire debug port . . . 21
2.25 TX and RX event alert . . . 21
2.26 Direction finding . . . 22
3 Pinouts and pin description . . . 23
4 Memory mapping . . . 28
5 Application circuits . . . 29
6 Electrical characteristics . . . 31
6.1 Parameter conditions . . . 31
6.1.1 Minimum and maximum values . . . 31
6.1.2 Typical values . . . 31
6.1.3 Typical curves . . . 31
6.1.4 Loading capacitor . . . 31
6.1.5 Pin input voltage . . . 32
6.2 Absolute maximum ratings . . . 33
6.3 Operating conditions . . . 34
6.3.1 Summary of main performance . . . 34
6.3.2 General operating conditions . . . 36
6.3.3 RF general characteristics . . . 37
6.3.4 RF transmitter characteristics . . . 38
6.3.5 RF receiver characteristics . . . 39
6.3.6 Embedded reset and power control block characteristics . . . 42
6.3.7 Supply current characteristics . . . 43
6.3.8 Wake-up time from low power modes . . . 44
6.3.9 High speed crystal requirements . . . 44
6.3.10 Low speed crystal requirements . . . 44
6.3.11 High speed ring oscillator characteristics . . . 45
6.3.12 Low speed ring oscillator characteristics . . . 45
6.3.13 PLL characteristics . . . 45
6.3.14 Flash memory characteristics . . . 45

6.3.15 Electrostatic discharge (ESD) . . . 46
6.3.16 I/O port characteristics . . . 46
6.3.17 RSTN pin characteristics . . . 47
6.3.18 ADC characteristics . . . 48
6.3.19 Temperature sensor characteristics . . . 49
6.3.20 Timer characteristics . . . 49
6.3.21 I^2C interface characteristics . . . 50
6.3.22 SPI characteristics . . . 50
7 Package information . . . 53
7.1 VFQFPN32 package information (42) . . . 53
7.2 WLCSP36 package information (01C1) . . . 55
7.3 Thermal characteristics . . . 58
8 Ordering information . . . 59
Important security notice . . . 60
Revision history . . . 61

List of tables

Table 1. SRAM overview . . . 7
Table 2. IPDs for BlueNRG-LPS . . . 9
Table 3. Relationship between the low power modes and functional blocks . . . 12
Table 4. Pin descriptions . . . 25
Table 5. Legend/abbreviations used in the pinout table . . . 26
Table 6. Alternate function port A . . . 27
Table 7. Alternate function port B . . . 27
Table 8. Application circuit external components . . . 30
Table 9. Voltage characteristics . . . 33
Table 10. Current characteristics . . . 33
Table 11. Thermal characteristics . . . 33
Table 12. Main performance SMPS ON . . . 34
Table 13. Main performance SMPS bypassed . . . 35
Table 14. Peripheral current consumption at V_{DD} = 3.3 V, system clock (CLK_SYS), SMPS on . . . 36
Table 15. General operating conditions . . . 36
Table 16. Bluetooth Low Energy RF general characteristics . . . 37
Table 17. Bluetooth Low Energy RF transmitter characteristics at 1 Mbps not coded . . . 38
Table 18. Bluetooth Low Energy RF transmitter characteristics at 2 Mbps not coded . . . 38
Table 19. Bluetooth Low Energy RF transmitter characteristics at 1 Mbps LE coded (S=8) . . . 39
Table 20. Bluetooth Low Energy RF receiver characteristics at 1 Msym/s uncoded . . . 39
Table 21. Bluetooth Low Energy RF receiver characteristics at 2 Msym/s uncoded . . . 40
Table 22. Bluetooth Low Energy RF receiver characteristics at 1 Msym/s LE coded (S=2) . . . 41
Table 23. Bluetooth Low Energy RF receiver characteristics at 1 Msym/s LE coded (S=8) . . . 42
Table 24. Embedded reset and power control block characteristics . . . 42
Table 25. Current consumption . . . 43
Table 26. Low power mode wake-up timing . . . 44
Table 27. HSE crystal requirements . . . 44
Table 28. LSE crystal requirements . . . 44
Table 29. HSI oscillator characteristics . . . 45
Table 30. LSI oscillator characteristics . . . 45
Table 31. PLL characteristics . . . 45
Table 32. Flash memory characteristics . . . 45
Table 33. Flash memory endurance and data retention . . . 46
Table 34. ESD absolute maximum ratings . . . 46
Table 35. I/O static characteristics . . . 46
Table 36. Output voltage characteristics . . . 47
Table 37. RSTN pin characteristics . . . 47
Table 38. ADC characteristics (HSI must be set to PLL mode) . . . 48
Table 39. Temperature sensor characteristics . . . 49
Table 40. TIM2/16/17 characteristics . . . 49
Table 41. IWDG min./max. timeout period at 32 kHz (LSE) . . . 49
Table 42. I^2C analog filter characteristics . . . 50
Table 43. SPI characteristics . . . 50
Table 44. VFQFPN32 - Mechanical data . . . 54
Table 45. WLCSP36 - Mechanical data . . . 56
Table 46. WLCSP36 - Example of PCB design rules . . . 57
Table 47. Package thermal characteristics . . . 58
Table 48. Ordering information . . . 59
Table 49. Document revision history . . . 61

List of figures

Figure 1. BlueNRG-LPS block diagram . . . 4
Figure 2. Bus matrix . . . 6
Figure 3. BlueNRG-LPS RF block diagram . . . 9
Figure 4. Power supply configuration . . . 10
Figure 5. Power supply domain overview . . . 11
Figure 6. Clock tree . . . 16
Figure 7. Pinout top view (QFN32 package) . . . 23
Figure 8. Pinout bump side view (WLCSP36 package) . . . 24
Figure 9. Memory map . . . 28
Figure 10. Application circuit: DC-DC converter, WLCSP36 package . . . 29
Figure 11. Application circuit: DC-DC converter, QFN32 package . . . 29
Figure 12. Pin loading conditions . . . 31
Figure 13. Pin input voltage . . . 32
Figure 14. Recommended RSTN pin protection . . . 47
Figure 15. SPI timing diagram - slave mode and CPHA = 0 . . . 51
Figure 16. SPI timing diagram - slave mode and CPHA = 1 . . . 51
Figure 17. SPI timing diagram - master mode . . . 52
Figure 18. VFQFPN32 - Outline . . . 53
Figure 19. VFQFPN32 - Footprint example . . . 54
Figure 20. WLCSP36 - Outline . . . 55
Figure 21. WLCSP36 - Footprint example . . . 56
Figure 22. Ordering information . . . 59

IMPORTANT NOTICE – READ CAREFULLY

STMicroelectronics NV and its subsidiaries (“ST”) reserve the right to make changes, corrections, enhancements, modifications, and improvements to ST products and/or to this document at any time without notice.

In the event of any conflict between the provisions of this document and the provisions of any contractual arrangement in force between the purchasers and ST, the provisions of such contractual arrangement shall prevail.

The purchasers should obtain the latest relevant information on ST products before placing orders. ST products are sold pursuant to ST’s terms and conditions of sale in place at the time of order acknowledgment.

The purchasers are solely responsible for the choice, selection, and use of ST products and ST assumes no liability for application assistance or the design of the purchasers’ products.

No license, express or implied, to any intellectual property right is granted by ST herein.

Resale of ST products with provisions different from the information set forth herein shall void any warranty granted by ST for such product.

If the purchasers identify an ST product that meets their functional and performance requirements but that is not designated for the purchasers' market segment, the purchasers shall contact ST for more information.

ST and the ST logo are trademarks of ST. For additional information about ST trademarks, refer to www.st.com/trademarks. All other product or service names are the property of their respective owners.

Information in this document supersedes and replaces information previously supplied in any prior versions of this document.

© 2026 STMicroelectronics – All rights reserved