# BQ296xxx Overvoltage Protection for 2-Series, 3-Series, and 4-Series Cell Li-Ion Batteries with Regulated Output Supply

## 1 Features

- 2-series, 3-series, and 4-series cell overvoltage protection (OVP)
- Fixed delay timer to trigger FET drive output (3-s, 4-s, 5.5-s, or 6.5-s options)
- Factory programmed OVP threshold (threshold range 3.85V to 4.6V)
- Output options: active high
- High-accuracy overvoltage protection: ±10mV
- Regulated supply output with self-disable and/or external enable/disable control
  - Options: 3.3V, 2.5V, and 1.8V (BQ2961)
  - Options: 3.3V, 3.15V, 3.0V (BQ2962)
- Low power consumption $I_{CC}$ ~ 4µA ($V_{CELL(ALL)}$ < $V_{PROTECT}$)
- Extra low power consumption with reg output disabled, $I_{CC}$ ~ 1.2µA
- Low leakage current per cell input < 100nA
- Small package footprint
  - 8-Pin WSON (2mm × 2mm)

## 2 Applications

- Notebook PC
- Ultrabooks
- Medical
- UPS battery backup

## 3 Description

The BQ296xxx family is a high-accuracy, low-power overvoltage protector with a 2mA regulated output supply for Li-ion battery pack applications.

Each cell in a 2-series to 4-series cell stack is individually monitored for an overvoltage condition. An internally fixed-delay timer is initiated upon detection of an overvoltage condition on any cell. Upon expiration of the delay timer, an output pin is triggered into an active state to indicate that an overvoltage condition has occurred.

The regulated output supply delivers up to 2mA (max) output current to drive always-on circuits, such as a real-time clock (RTC) oscillator. The BQ296xxx family has a self-disable function to turn off the regulated output if any cell voltage falls below a certain threshold, thereby preventing drain on the battery, and provides an external control to enable or disable the regulated output.

**Package Information**

| PART NUMBER | PACKAGE (1) | BODY SIZE (NOM) |
|---|---|---|
| BQ2961 | WSON (8) | 2.00mm × 2.00mm |
| BQ2962 | | |

(1) For all available packages, see the orderable addendum at the end of the data sheet.

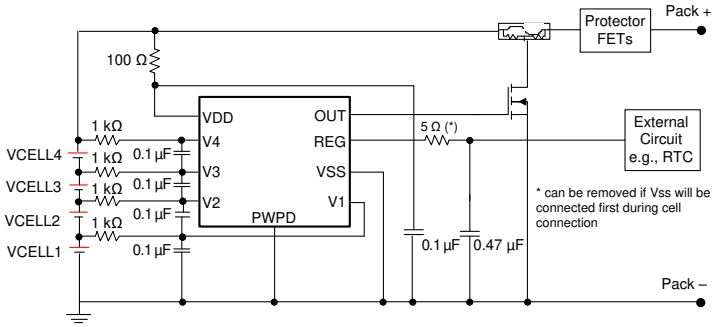


**Simplified Schematic**

An IMPORTANT NOTICE at the end of this data sheet addresses availability, warranty, changes, use in safety-critical applications, intellectual property matters and other important disclaimers. PRODUCTION DATA.

# Table of Contents

**1 Features**....1
**2 Applications**....1
**3 Description**....1
**4 Device Comparison Table**....3
**5 Pin Configuration and Functions**....4
**6 Specifications**....5
6.1 Absolute Maximum Ratings....5
6.2 ESD Ratings....5
6.3 Recommended Operating Conditions....5
6.4 Thermal Information....5
6.5 Electrical Characteristics....6
6.6 Typical Characteristics....8
**7 Detailed Description**....9
7.1 Overview....9
7.2 Functional Block Diagram....10
7.3 Feature Description....10
7.4 Device Functional Modes....11
**8 Application and Implementation**....14
8.1 Application Information....14
8.2 Typical Application....14
**9 Power Supply Recommendations**....17
**10 Layout**....17
10.1 Layout Guidelines....17
10.2 Layout Example....17
**11 Device and Documentation Support**....18
11.1 Device Support....18
11.2 Receiving Notification of Documentation Updates....18
11.3 Support Resources....18
11.4 Trademarks....18
11.5 Electrostatic Discharge Caution....18
11.6 Glossary....18
**12 Revision History**....19
**13 Mechanical, Packaging, and Orderable Information**....19


Copyright © 2025 Texas Instruments Incorporated

# 4 Device Comparison Table

**Table 4-1. BQ2961 Device Options**

| BQ2961 | OVP (V) | OVP DELAY (s) | UV (V) | LDO (V) |
|---|---|---|---|---|
| BQ296100 | 4.35 | 6.5 | 2.5 | 3.3 |
| BQ296103 | 4.50 | 6.5 | 2.5 | 3.3 |
| BQ296106 | 4.45 | 6.5 | 2.8 | 3.3 |
| BQ296107 | 4.50 | 6.5 | 2.8 | 3.3 |
| BQ296111 | 4.45 | 4.0 | 2.5 | 3.3 |
| BQ296112 | 4.50 | 3.0 | 2.5 | 3.3 |
| BQ296113 | 4.35 | 3.0 | 2.5 | 3.3 |
| BQ296114 | 4.50 | 4.0 | 2.5 | 3.3 |
| BQ296115 | 4.25 | 6.5 | 2.0 | 2.5 |
| BQ296116(1) | 4.50 | 6.5 | 2.5 | 1.8 |
| BQ2961(1) | 3.85V–4.60V (50mV step) | 3.0, 4.0, 5.5, 6.5 | 2.0V–2.8V (50mV step) | 1.8, 2.5, 3.3 |

(1) PRODUCT PREVIEW. Contact TI for more information.

**Table 4-2. BQ2962 Device Options**

| BQ2962 | OVP (V) | OVP DELAY (s) | UV (V) | LDO (V) |
|---|---|---|---|---|
| BQ296202 | 4.45 | 6.5 | 2.5 | 3.3 |
| BQ296203 | 4.50 | 6.5 | 2.5 | 3.3 |
| BQ296212 | 4.50 | 3.0 | 2.5 | 3.3 |
| BQ296213 | 4.35 | 3.0 | 2.5 | 3.3 |
| BQ296215 | 4.50 | 6.5 | 2.5 | 3.0 |
| BQ296216 | 4.55 | 6.5 | 2.5 | 3.0 |
| BQ296217 | 4.55 | 6.5 | 2.8 | 3.3 |
| BQ296221 | 4.55 | 6.5 | 2.5 | 3.3 |
| BQ296222 | 4.50 | 6.5 | 3.0 | 3.0 |
| BQ296223 | 4.50 | 6.5 | 2.5 | 3.3 |
| BQ296224 | 4.50 | 6.5 | 2.5 | 3.0 |
| BQ296226 | 4.50 | 6.5 | 2.8 | 3.3 |
| BQ296227 | 4.55 | 6.5 | 2.8 | 3.3 |
| BQ296228 | 4.55 | 6.5 | 2.5 | 3.0 |
| bq296229 | 4.60 | 6.5 | 2.5 | 3.0 |
| BQ296230 | 4.35 | 6.5 | 3.0 | 3.0 |
| BQ296231 | 4.60 | 6.5 | 2.5 | 3.3 |
| BQ296232 | 4.55 | 6.5 | 3.0 | 3.0 |
| BQ296233 | 4.45 | 6.5 | 2.5 | 3.3 |
| BQ296234 | 4.60 | 6.5 | 3.0 | 3.0 |
| BQ296235 | 4.45 | 4 | 2.03 | 3.3 |
| BQ2962(1) | 3.85V–4.60V (50mV step) | 3.0, 4.0, 5.5, 6.5 | 2.0V–3.5V (50mV step) | 3, 3.15, 3.3 |

(1) PRODUCT PREVIEW. Contact TI for more information.

Copyright © 2025 Texas Instruments Incorporated

# 5 Pin Configuration and Functions

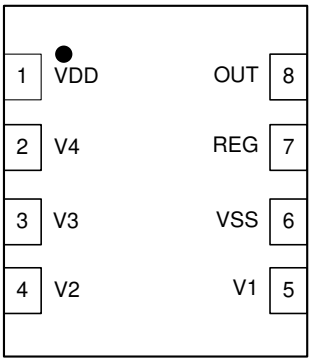


**Figure 5-1. 2-Series to 4-Series BQ2961 (Top View)**

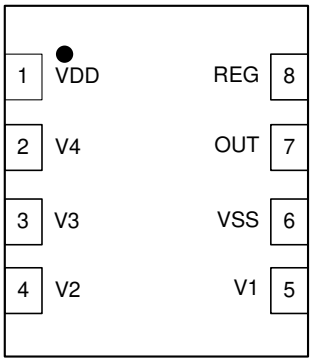


**Figure 5-2. 2-Series to 4-Series BQ2962 (Top View)**

**Table 5-1. Pin Functions**

| PIN | | | TYPE[(1)] | DESCRIPTION |
|---|---|---|---|---|
| NAME | BQ2961 | BQ2962 | | |
| OUT | 8 | 7 | OA | Analog output drive for an overvoltage fault signal; CMOS output high or open-drain active low |
| PWPD | 9 | 9 | P | TI recommends connecting the exposed pad to VSS on PCB. |
| REG | 7 | 8 | OA | Regulated supply output. Requires an external ceramic capacitor for stability |
| V1 | 5 | 5 | IA | Sense input for positive voltage of the lowest cell from the bottom of the stack |
| V2 | 4 | 4 | IA | Sense input for positive voltage of the second cell from the bottom of the stack |
| V3 | 3 | 3 | IA | Sense input for positive voltage of the third cell from the bottom of the stack |
| V4 | 2 | 2 | IA | Sense input for positive voltage of the fourth cell from the bottom of the stack |
| VDD | 1 | 1 | P | Power supply input |
| VSS | 6 | 6 | P | Electrically connected to integrated circuit ground and negative terminal of the lowest cell in the stack |

(1) IA = Analog input, OA = Analog Output, P = Power connection


Copyright © 2025 Texas Instruments Incorporated

# 6 Specifications

## 6.1 Absolute Maximum Ratings

Over operating free-air temperature range (unless otherwise noted)[1]

| | | MIN | MAX | UNIT |
|---|---|---|---|---|
| Supply voltage | VDD – VSS | –0.3 | 30 | V |
| Input voltage | V4 – V3, V3 – V2, V2 – V1, V1 – VSS | –0.3 | 30 | |
| | REG – VSS | –0.3 | 3.6 | |
| Output voltage | OUT – VSS | –0.3 | 30 | |
| Continuous total power dissipation, $P_{TOT}$ | | See *Section 6.4*. | | |
| Lead temperature (soldering, 10 s), $T_{SOLDER}$ | | 300 | 300 | °C |
| Storage temperature, $T_{stg}$ | | –65 | 150 | °C |

(1) Operation outside the *Absolute Maximum Ratings* may cause permanent device damage. Absolute Maximum Ratings do not imply functional operation of the device at these or any other conditions beyond those listed under *Recommended Operating Conditions*. If outside the Recommended Operating Conditions but within the Absolute Maximum Ratings, the device may not be fully functional, and this may affect device reliability, functionality, performance, and shorten the device lifetime.

## 6.2 ESD Ratings

| | | | VALUE | UNIT |
|---|---|---|---|---|
| $V_{(ESD)}$ | Electrostatic discharge | Human body model (HBM), per ANSI/ESDA/JEDEC JS-001[1] | 2000 | V |
| | | Charged device model (CDM), per JEDEC specification JESD22-C101[2] | 500 | |

(1) JEDEC document JEP155 states that 500V HBM allows safe manufacturing with a standard ESD control process.
(2) JEDEC document JEP157 states that 250V CDM allows safe manufacturing with a standard ESD control process.

## 6.3 Recommended Operating Conditions

Over operating free-air temperature range (unless otherwise noted).

| | | MIN | NOM | MAX | UNIT |
|---|---|---|---|---|---|
| Supply voltage, $V_{DD}$ [1] | Supply voltage, $V_{DD}$ [1] | 3 | | 20 | V |
| | Supply voltage, $V_{DD}$ with REG output on | 4 | | | |
| Input voltage range | $V_n – V_{n-1}$, V1 – VSS | 0 | | 5 | V |
| Operating ambient temperature range, $T_A$ | | –40 | | 110 | °C |

(1) See *Section 8.2*.

## 6.4 Thermal Information

| THERMAL METRIC[1] | | BQ296xxx DSG (WSON) 8 PINS | UNIT |
|---|---|---|---|
| $R_{\theta JA}$ | Junction-to-ambient thermal resistance | 62 | °C/W |
| $R_{\theta JC(top)}$ | Junction-to-case(top) thermal resistance | 72 | °C/W |
| $R_{\theta JB}$ | Junction-to-board thermal resistance | 32.5 | °C/W |
| $\psi_{JT}$ | Junction-to-top characterization parameter | 1.6 | °C/W |
| $\psi_{JB}$ | Junction-to-board characterization parameter | 33 | °C/W |
| $R_{\theta JC(bot)}$ | Junction-to-case(bottom) thermal resistance | 10 | °C/W |

(1) For more information about traditional and new thermal metrics, see the *Semiconductor and IC Package Thermal Metrics* application note.

## 6.5 Electrical Characteristics

Typical values stated where $T_A$ = 25°C and VDD = 14.4V, MIN/MAX values stated where $T_A$ = –40°C to +110°C, and $V_{DD}$ = 3V to 15V (unless otherwise noted).

| PARAMETER | | TEST CONDITIONS | | MIN | TYP | MAX | UNIT |
|---|---|---|---|---|---|---|---|
| **Voltage Protection Thresholds** | | | | | | | |
| $V_{OV}$ | $V_{(PROTECT)}$ Overvoltage Detection | $R_{IN}$ = 1 kΩ | | Applicable Voltage: 3.85V to 4.6V in 50mV steps | | | V |
| $V_{HYS}$ | OV Detection Hysteresis | | | 250 | 300 | 400 | mV |
| $V_{OA}$ | OV Detection Accuracy | $T_A$ = 25°C | | –10 | | 10 | mV |
| $V_{OADRIFT}$ | OV Detection Accuracy Across Temperature | $T_A$ = –40°C | | –40 | | 40 | mV |
| | | $T_A$ = 0°C | | –20 | | 20 | mV |
| | | $T_A$ = 60°C | | –24 | | 24 | mV |
| | | $T_A$ = 110°C | | –54 | | 54 | mV |
| | | $T_A$ = 110°C | | –54 | | 54 | mV |
| **Supply and Leakage Current** | | | | | | | |
| $I_{DD}$ | Supply Current with REG on | ($V_n$ – $V_{n-1}$) = 2V to 4.15V, n = 1 to 4, VDD = top $V_n$ voltage (V1 – $V_{SS}$) > $V_{UVREG}$ , $I_{REG}$ = 0mA, | $T_A$ = 0°C to 60°C | | 4 | 6 | µA |
| | | | $T_A$ = –40°C to 110°C | | | 8 | µA |
| $I_{DD}$ | Supply Current with REG off | ($V_n$ – $V_{n-1}$) = 2V to 4.15V, n = 1 to 4, VDD = top $V_n$ voltage (V1 – $V_{SS}$) < $V_{UVREG}$ | $T_A$ = 0°C to 60°C | | 1 | 2 | µA |
| | | | $T_A$ = –40°C to 110°C | | | 4 | µA |
| $I_{IN}$ | Input Current at $V_x$ Pins | ($V_n$ – $V_{n-1}$) = (V1 – $V_{SS}$) = 3.8V, VDD = top $V_n$ voltage, $T_A$ = 25°C | | –0.1 | | 0.1 | µA |
| **Output Drive OUT, CMOS Active High** | | | | | | | |
| $V_{OUT}$ | Output Drive Voltage, Active High | ($V_n$ – $V_{n-1}$) or (V1 – $V_{SS}$) > $V_{OV}$, $I_{OH}$ = 100µA, VDD = top $V_n$ voltage | | 6 | 7 | 8 | V |
| | | If three of four cells are short circuited, only one cell remains powered and > $V_{OV}$, VDD = $V_n$ (the remaining cell voltage), $I_{OH}$ = 100µA | | | VDD – 0.3 | | V |
| | | ($V_n$ – $V_{n-1}$) and (V1 – $V_{SS}$) < $V_{OV}$, VDD = sum of the cell stack voltage, $I_{OL}$ = 100µA measured into OUT pin | | | 250 | 400 | mV |
| $I_{OUTH}$ | OUT Source Current (during OV) | ($V_n$ – $V_{n-1}$), (V3 – V2), or (V1 – $V_{SS}$) > $V_{OV}$, VDD = top $V_n$ voltage, forced OUT = 0V, measured out of OUT pin | | | | 4.5 | mA |
| $I_{OUTL}$ | OUT Sink Current (no OV) | ($V_n$ – $V_{n-1}$) and (V1 – $V_{SS}$) < $V_{OV}$, VDD = top $V_n$ voltage, forced OUT = VDD, measured into OUT pin. Pull-up resistor $R_{PU}$ = 5kΩ to VDD | | 0.5 | | 14 | mA |
| **Internal Fixed Delay Timer** | | | | | | | |
| $t_{DELAY}$ | OV Delay Time[(1)] | Internal Fixed Delay, 3-s delay option | | 2.4 | 3 | 3.6 | s |
| | | Internal Fixed Delay, 4-s delay option | | 3.2 | 4 | 4.8 | s |
| | | Internal Fixed Delay, 5.5-s delay option | | 4.4 | 5.5 | 6.6 | s |
| | | Internal Fixed Delay, 6.5-s delay option | | 5.2 | 6.5 | 7.8 | s |
| $t_{DELAY_CTM}$ | Fault Detection Delay Time in Test Mode OV Delay Time | Internal Fixed Delay | | | 15 | | ms |
| $t_{DELAY_RESET}$ | OV delay timer count reset time; $t_{DELAY}$ resets when the cell voltage falls below $V_{OV}$ for $t_{DELAY_RESET}$.[(1)] | Internal Fixed Delay | | | 0.6 | | ms |


Copyright © 2025 Texas Instruments Incorporated

## 6.5 Electrical Characteristics (continued)

Typical values stated where $T_A$ = 25°C and VDD = 14.4V, MIN/MAX values stated where $T_A$ = –40°C to +110°C, and $V_{DD}$ = 3V to 15V (unless otherwise noted).

| PARAMETER | | TEST CONDITIONS | | MIN | TYP | MAX | UNIT |
|---|---|---|---|---|---|---|---|
| **Regulated Supply Output, REG** | | | | | | | |
| $V_{REG}$ | REG Supply at 500µA load | VDD ≥ 4V, $I_{REG}$ = 500µA, $C_{REG}$ = 0.47µF | $V_{REG}$ = 3.3V, | 3.234 | 3.300 | 3.366 | V |
| | | | $V_{REG}$ = 3.15V, BQ2962 | 3.087 | 3.150 | 3.213 | |
| | | | $V_{REG}$ = 3.0V, BQ2962 | 2.940 | 3.000 | 3.060 | |
| | | | $V_{REG}$ = 2.5V, BQ2961 | 2.450 | 2.500 | 2.550 | |
| | | | $V_{REG}$ = 1.8V, BQ2961 | 1.764 | 1.800 | 1.836 | |
| $V_{REG}$ | REG Supply from 0 to 2mA load | VDD ≥ 4V, $I_{REG}$ = 0µA to 2mA, $C_{REG}$ = 0.47µF | $V_{REG}$ = 3.3V, BQ2961, BQ2962 | 3.200 | 3.300 | 3.400 | V |
| | | | $V_{REG}$ = 3.15V, BQ2962 | 3.050 | 3.150 | 3.250 | |
| | | | $V_{REG}$ = 3.0V, BQ2962 | 2.900 | 3.000 | 3.100 | |
| | | | $V_{REG}$ = 2.5V, BQ2961 | 2.425 | 2.500 | 2.575 | |
| | | | $V_{REG}$ = 1.8V, BQ2961 | 1.746 | 1.800 | 1.854 | |
| $I_{REG}$ | REG Current Output | VDD ≥ 4V, $C_{REG}$ = 0.47µF | | 0 | | 2 | mA |
| $I_{REG_SC_Limit}$ | REG Output Short Circuit Current Limit | REG = $V_{SS}$, $C_{REG}$ = 0.47µF | | 4 | | | mA |
| $R_{REG_PD}$ | REG pull-down resistor | REG is disabled. | | 20 | 30 | 45 | kΩ |
| **Regulated Supply Undervoltage Self-Disable** | | | | | | | |
| $V_{UVREG}$ | Undervoltage detection | Factory Configuration: 2.0V to 3.5V in 50mV steps, $T_A$ = 25°C | | –50 | | 50 | mV |
| $V_{UVHYS}$ | Undervoltage Detection Hysteresis | | | 250 | 300 | 400 | mV |
| $t_{UVDELAY}$ | Undervoltage Detection Delay | | | 4.5 | 6 | 7.5 | s |
| $V_{UVQUAL}$ | Cell voltage to qualify for UV detection | | | | 0.5 | | V |

(1) Specified by design. Not 100% tested in production.

Copyright © 2025 Texas Instruments Incorporated

## 6.6 Typical Characteristics

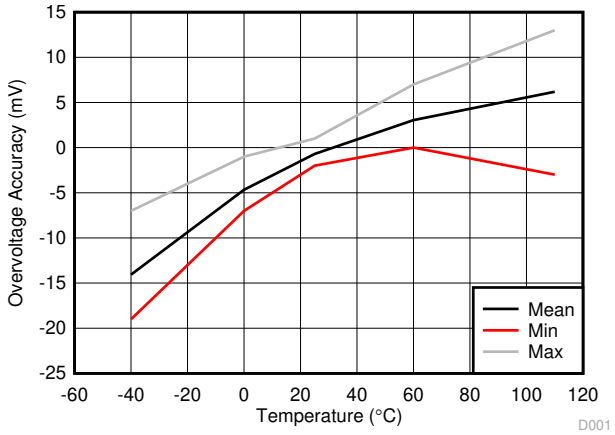


**Figure 6-1. Overvoltage Threshold ($V_{OV}$) vs. Temperature**

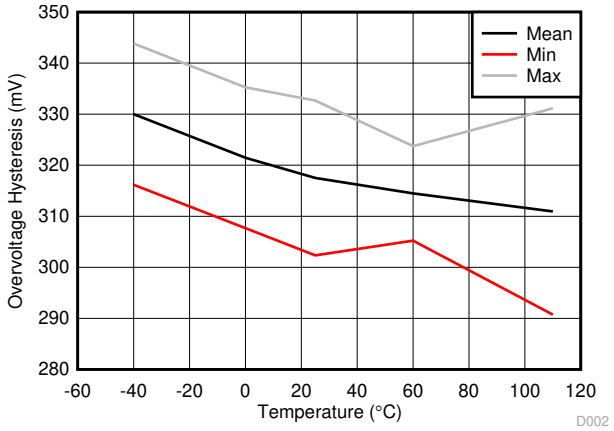


**Figure 6-2. Hysteresis $V_{HYS}$ vs. Temperature**

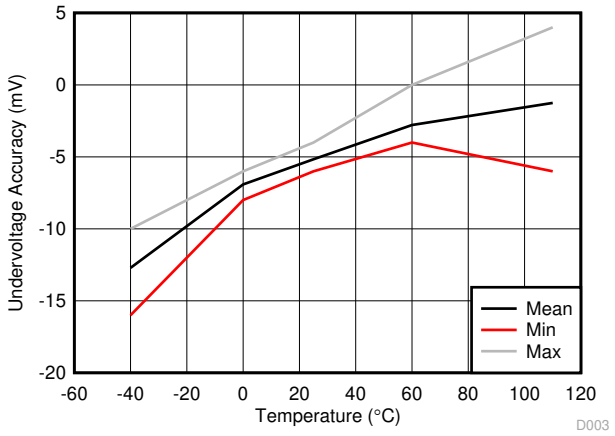


**Figure 6-3. Undervoltage Accuracy**

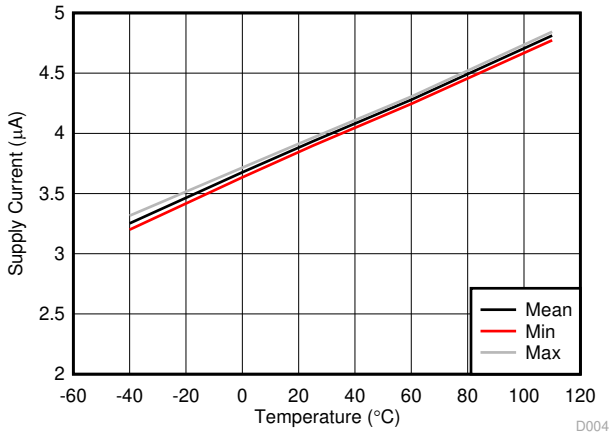


**Figure 6-4. $I_{DD}$ with Regulator On**

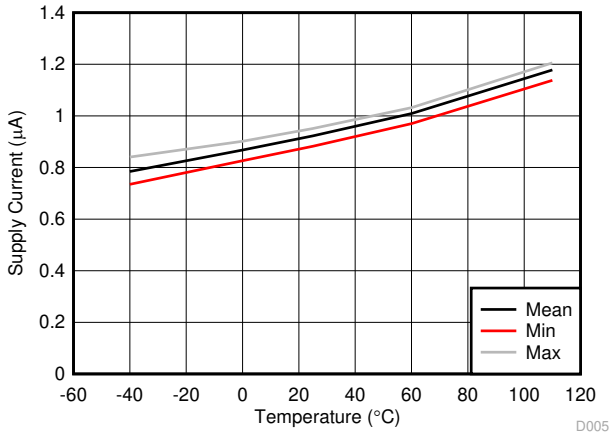


**Figure 6-5. $I_{DD}$ with Regulator Off**

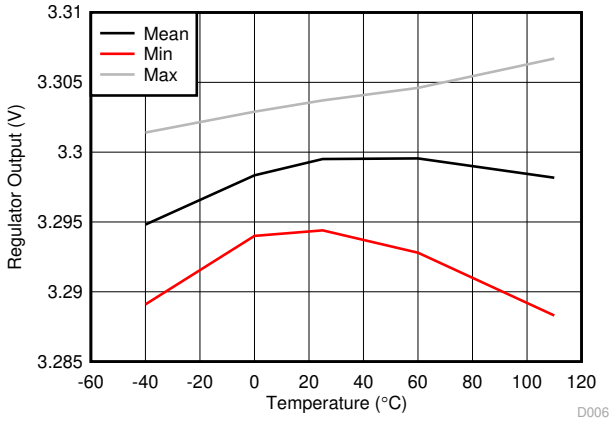


**Figure 6-6. Regulator Output Without Load**


Copyright © 2025 Texas Instruments Incorporated

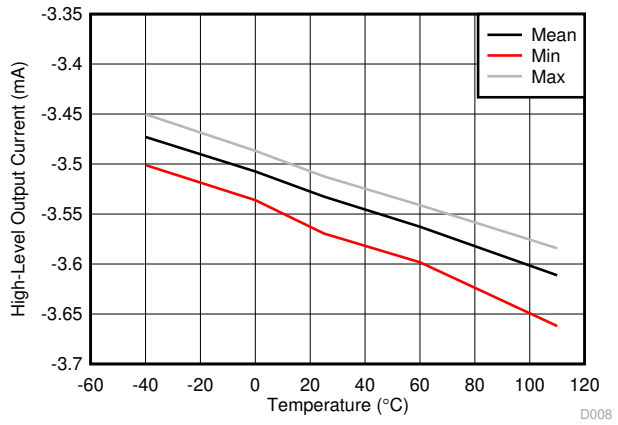


**Figure 6-7. $I_{OUTH}$ vs Temperature**

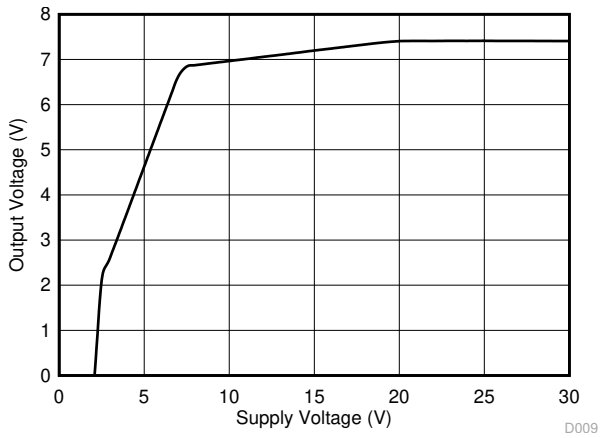


**Figure 6-8. $V_{OUT}$ vs $V_{DD}$**

# 7 Detailed Description

## 7.1 Overview

The BQ2961 and BQ2962 devices are second-level overvoltage (OV) protectors with a regulated output. Each cell is monitored independently by comparing the actual cell voltage to an overvoltage threshold $V_{OV}$. The overvoltage threshold is preprogrammed at the factory with a range between 3.85V to 4.65V.

The regulated output is enabled unless any of the cell voltages fall below the $V_{UVREG}$ threshold. This threshold is preprogrammed at the factory with a range between 2V to 2.8 (3.5V for future BQ2962 options).

**Table 7-1. Programmable Parameters**

| OVERVOLTAGE RANGE (V) | OVERVOLTAGE DELAY (s) | UNDERVOLTAGE RANGE (V) | REGULATOR (V) |
|---|---|---|---|
| 3.85 to 4.6 in 50mV steps | 3, 4, 5.5, 6.5 | 2.0 to 2.8 (3.5 for future BQ2962 options) in 50-mV steps | 1.8, 2.5, 3.3 (BQ2961)<br>3.0, 3.15, 3.3 (BQ2962) |

Copyright © 2025 Texas Instruments Incorporated

## 7.2 Functional Block Diagram

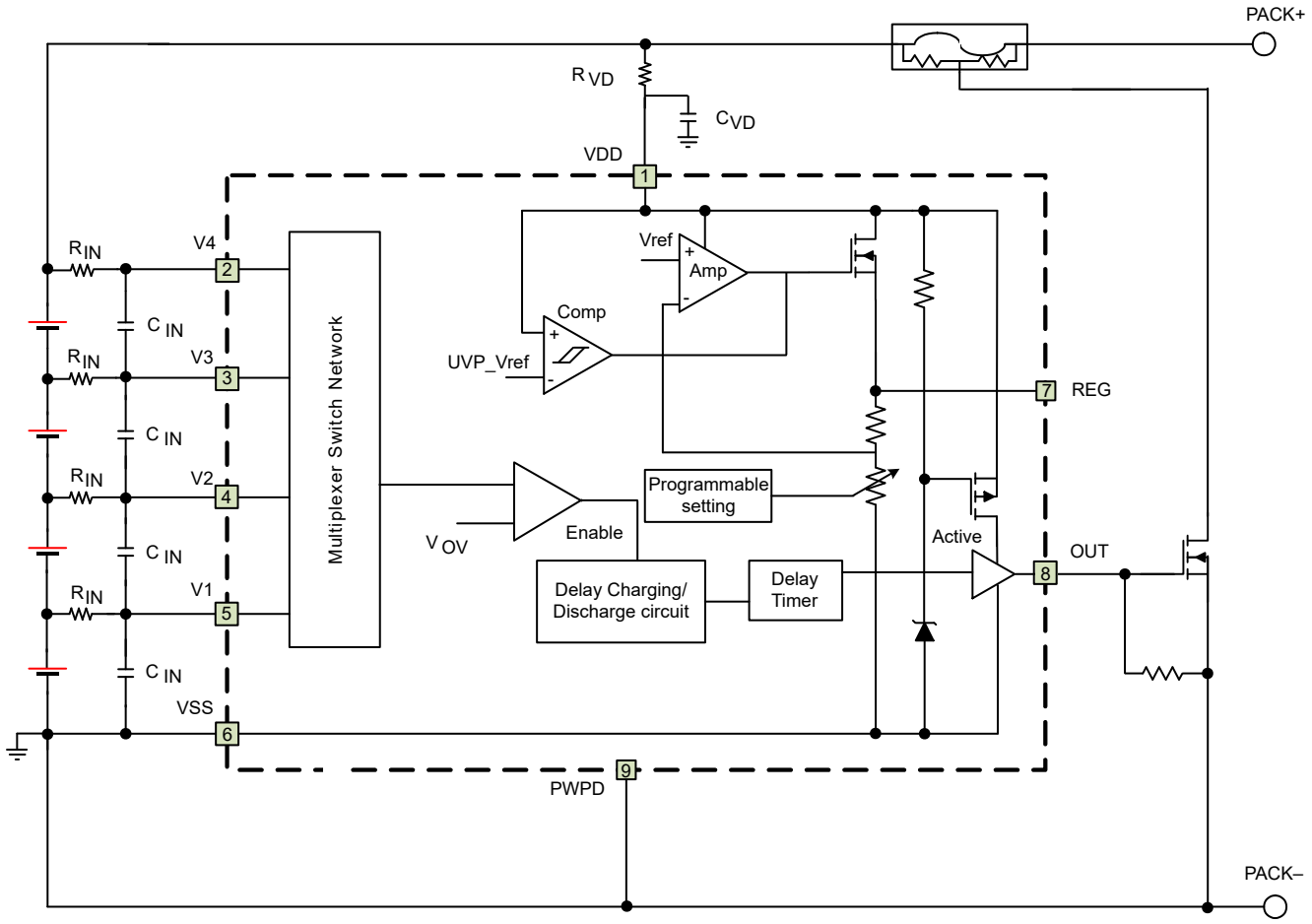


## 7.3 Feature Description

### *7.3.1 Pin Details*

#### 7.3.1.1 Input Sense Voltage, Vx

These inputs sense each battery cell voltage. A series resistor and a capacitor across the cell for each input is required for noise filtering and stable voltage monitoring.

#### 7.3.1.2 Output Drive, OUT

This terminal serves as the fault signal output in active high.

#### 7.3.1.3 Supply Input, VDD

This terminal is the unregulated input power source for the device. A series resistor is connected to limit the current, and a capacitor is connected to ground for noise filtering.

#### 7.3.1.4 Regulated Supply Output, REG

This terminal is connected to an external capacitor and provides a regulated supply to power a circuit such as a real-time clock integrated circuit, or functions requiring a well-regulated supply. Maximum current load on this pin cannot exceed $I_{REG}$ mA.

The REG output has protection for overcurrent, using a current limit protection circuit, and also detects and protects for excessive power dissipation due to short circuit of the external load. This pin requires a ceramic 1µF capacitor connection to VSS for improved stability, noise immunity, and ESD performance of the supply output. This capacitor must be placed close to the REG and VSS pins for connection.


Copyright © 2025 Texas Instruments Incorporated

### 7.3.2 Overvoltage Sensing for OUT

In the BQ296xxx device, each cell is monitored independently. Overvoltage is detected by comparing the actual cell voltage to a protection voltage reference, $V_{OV}$. If any cell voltage exceeds the programmed OV value, an internal timer circuit is activated. This timer circuit causes a factory pre-programmed fixed delay before the OUT terminal goes from inactive to active state.

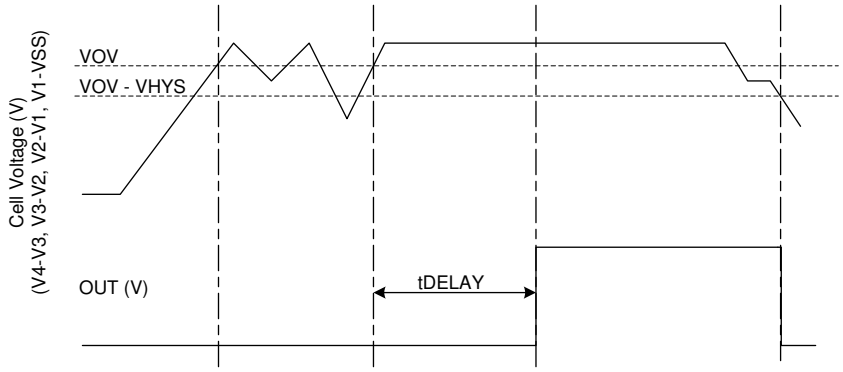


**Figure 7-1. Timing for Overvoltage Sensing for OUT**

### 7.3.3 Regulated Output Voltage

For BQ2961, there are three factory-preprogrammed options for the regulated output voltage, 3.3V, 2.5V, and 1.8V. For BQ2962, the regulated output voltage options are 3.3V, 3.15V, and 3.0V. Potentially, the BQ2962xy device can provide other regulated voltage output between 3.3V to 3.0V. Contact Texas Instruments for details.

At power up, the regulated output is on by default. If any cell voltage is below $V_{UVREG}$ at device power up, the regulated output will remain on until the $t_{UV_DELAY}$ time has passed, the regulated output turns off after the delay time.

During discharge, if any cell voltage falls below the $V_{UVREG}$ threshold for $t_{UV_DELAY}$ time, the regulated output is self-disabled. The regulated output turns on again when all the cell voltages are above $V_{UVREG}$ + $V_{UVHYS}$.

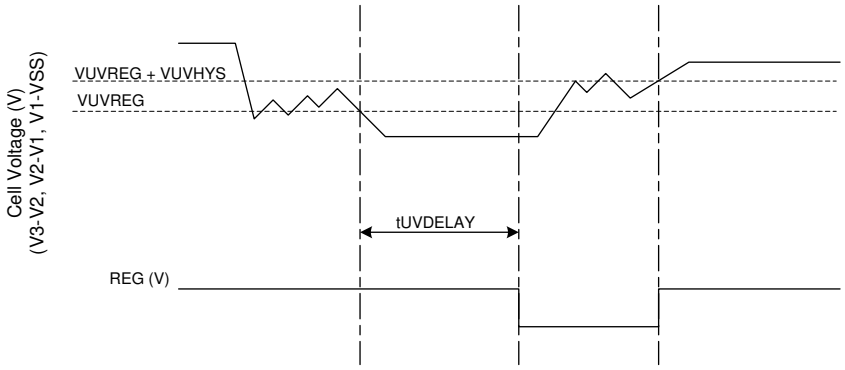


**Figure 7-2. REG Output Timing**

## 7.4 Device Functional Modes

### 7.4.1 NORMAL Mode

When all of the cell voltages are below the $V_{OV}$ threshold AND above $V_{UVREG}$ threshold, the device operates in NORMAL mode. The device monitors the differential cell voltages connected across (V1–VSS), (V2–V1), (V3–V2), and (V4–V3). The OUT pin is inactive in this mode. The regulated output is always enabled for BQ2961.

Copyright © 2025 Texas Instruments Incorporated

### 7.4.2 OVERVOLTAGE Mode

OVERVOLTAGE mode is detected if any of the cell voltages exceed the overvoltage threshold, $V_{OV}$, for a configured OV delay time. The OUT pin is activated after a delay time preprogrammed at the factory. The OUT pin will pull high internally. Then an external FET is turned on, shorting the fuse to ground, which allows the battery and/or charger power to blow the fuse. When all of the cell voltages fall below ($V_{OV}$ – $V_{HYS}$), the device returns to NORMAL mode. The regulated output (if enabled) remains on in this mode.

### 7.4.3 UNDERVOLTAGE Mode

The UNDERVOLTAGE mode is detected if any of the cell voltage across (V1–VSS), (V2–V1), (V3–V2), or (V4–V3) is below the $V_{UVREG}$ threshold for $t_{UV_DELAY}$ time. In this mode, the regulated output is disabled. To return to the NORMAL mode, all the cell voltages must be above ($V_{UVREG}$ + $V_{UVHYS}$).

For a low cell configuration, $V_n$ pin can be shorted to the ($V_{n-1}$) pin. The device ignores any differential cell voltage below $V_{UVQUAL}$ threshold for undervoltage detection.

### 7.4.4 CUSTOMER TEST Mode

The Customer Test Mode (CTM) helps to reduce test time for checking the overvoltage delay-timer parameter once the circuit is implemented into the battery pack. To enter CTM, the VDD pin should be set at least 10V higher than V4 (see Figure 7-3). The delay timer is greater than 10ms, but considerably shorter than the timer delay in normal operation. To exit CTM, remove the VDD to V4 voltage differential of 10V, so that the decrease in the value automatically causes an exit.

**CAUTION**

Avoid exceeding any Absolute Maximum Voltages on any pins when placing the device into CTM. Also avoid exceeding Absolute Maximum Voltages for the individual cell voltages (V4–V3), (V3–V2), (V2–V1) and (V1–VSS). Stressing the pins beyond the rated limits can cause permanent damage to the device.

Figure 7-3 shows the timing for the Customer Test Mode.

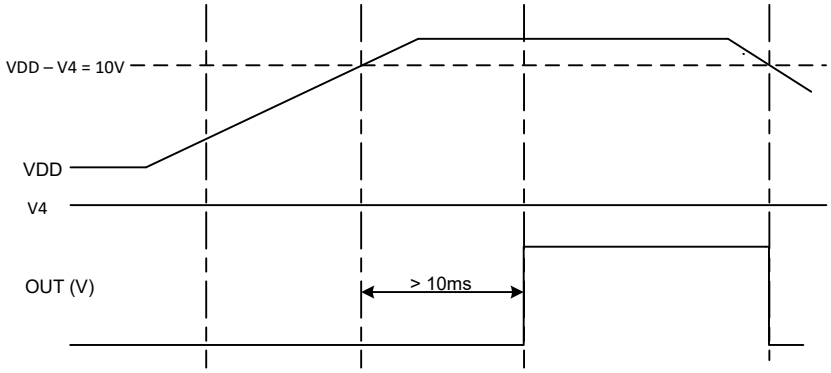


**Figure 7-3. Timing for Customer Test Mode**

Figure 7-4 shows the measurement for current consumption of the product for both VDD and Vx.


Copyright © 2025 Texas Instruments Incorporated

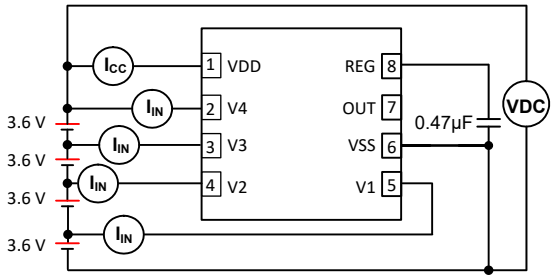


**Figure 7-4. Configuration for Integrated Circuit Current Consumption Test**

# 8 Application and Implementation

**Note**

Information in the following applications sections is not part of the TI component specification, and TI does not warrant its accuracy or completeness. TI's customers are responsible for determining suitability of components for their purposes. Customers should validate and test their design implementation to confirm system functionality.

## 8.1 Application Information

The BQ296xxx family of second-level protectors is used for overvoltage protection of the battery pack in the application. A regulated output is available to drive a small circuit with maximum $I_{REG}$ loading. The device OUT pin is active high, which drives a NMOS FET that connects the fuse to ground in the event of a fault condition. This provides a shorted path to use the battery and/or charger power to blow the fuse and cut the power path.

## 8.2 Typical Application

Application Schematic shows the recommended reference design components.

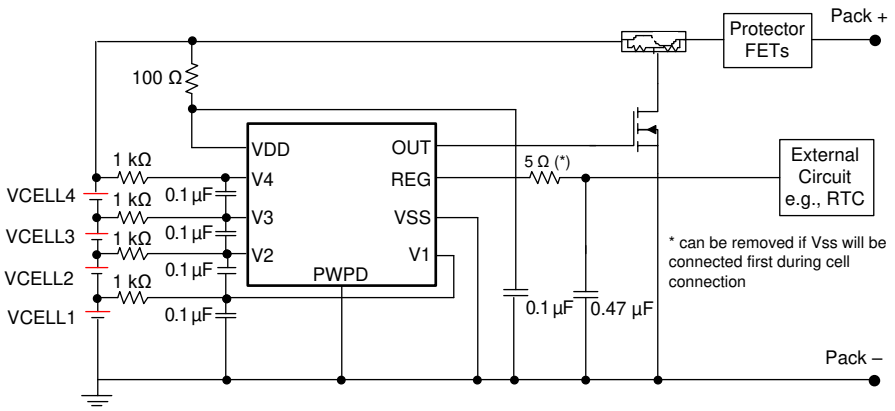


**Figure 8-1. Application Schematic**

### *8.2.1 Design Requirements*

**Note**

Changes to the ranges shown in Table 8-1 will impact the accuracy of the cell measurements.

**Table 8-1. Parameters**

| PARAMETER | EXTERNAL COMPONENT | MIN | NOM | MAX | UNIT |
|---|---|---|---|---|---|
| Voltage monitor filter resistance | $R_{IN}$ | 900 | 1000 | 4700 | Ω |
| Voltage monitor filter capacitance | $C_{IN}$ | 0.01 | 0.1 | 1.0 | µF |
| Supply voltage filter resistance | $R_{VD}$ | 0.1 | — | 1 | KΩ |
| Supply voltage filter capacitance | $C_{VD}$ | — | 0.1 | 1.0 | µF |
| REG output capacitance | $C_{REG}$ | 0.47 | 1 | — | µF |

**Note**

The device is calibrated using an $R_{IN}$ value = 1kΩ. Using a value other than the recommended value changes the accuracy of the cell voltage measurements and $V_{OV}$ trigger level.


Copyright © 2025 Texas Instruments Incorporated

### 8.2.2 Detailed Design Procedure

**Note**

The device VSS must be connected first during PCB test or cell attachment. Failure to do so can damage the REG pin.

1. If the VSS pin cannot be connected first, it is required to add a resistor of a minimum of 5Ω to a maximum of 10Ω (a 5Ω resistor is used in the reference schematic, Figure 8-2) in series with the REG capacitor. When VSS is floating, the REG capacitor always charges up to the VDD voltage. When VSS is finally connected, the REG capacitor will be discharged. Adding a small resistor in series reduces the current strength and avoids any potential damage to the REG pin. The 5Ω resistor can be placed in series with the REG connect circuit (as shown in Figure 8-2) or in series of the REG capacitor (as shown in Figure 8-3). Placing the resistor in series with the REG circuit results in a small drop of $V_{REG}$ (for example: max loading of $I_{REG}$ mA with a 5Ω resistor will drop 5mV on $V_{REG}$), but such a connection can protect again rush current discharge from a REG capacitor or an external filter capacitor connected to the REG pin. Placing the resistor in series with the REG capacitor is an alternative to avoiding an additional drop in $V_{REG}$ if the filter capacitor used by the external circuit is much smaller than the REG capacitor.
2. After VSS is connected, the device allows a random cell connection to the Vx pin.
3. The cell should be connected to the lower $V_n$ pin; the unused $V_n$ pin should be shorted to the ($V_{n-1}$) pin. See Figure 8-2 for details.

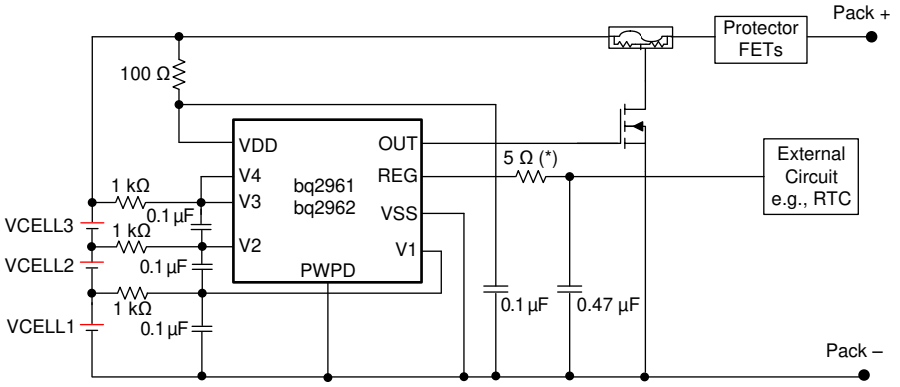


**Figure 8-2. 3-Series BQ2961 and BQ2962 Schematic**

4. A Zener diode can be added to the REG pin to VSS, as shown in Figure 8-3. This is recommended to protect the circuit connected to the REG pin if floating VSS in the field is a risk concern. When VSS is floating (during cell connection when VSS is not connected first or in a system fault with a broken BAT– wire), the REG voltage always pulls up to VDD. In a 4-series configuration, the REG voltage can reach approximately 16V with VSS floating. Adding a Zener diode clamps the REG voltage to a safe level for the external circuits connected to the REG pin. Having the Zener diode can also protect the external circuits if the REG pin is shorted to the OUT pin or any other high-voltage output terminal. If a Zener diode is used, TI recommends putting the diode on the battery side with the BQ296xxx device to allow protection on the REG pin, as well as the circuit connected to REG under the floating VSS condition. The resistor in series with the REG pin is not required in this case.

The 5-Ω resistor limits the rush current discharge from the capacitor during cell connection when Vss is not connected first.

This resistor is not required if Vss is connected first in the cell connection sequence.

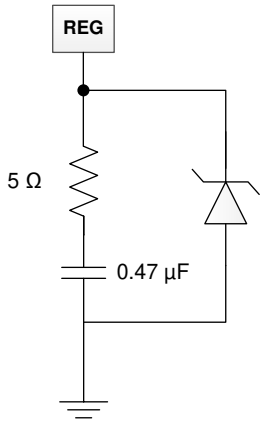


Loss of Vss connection or REG shorted to high voltage can bring the REG above the regulated range. This optional zener clamp can protect the downstream circuit under such an event.

**Figure 8-3. 5V Zener Diode**

### *8.2.3 Application Curves*

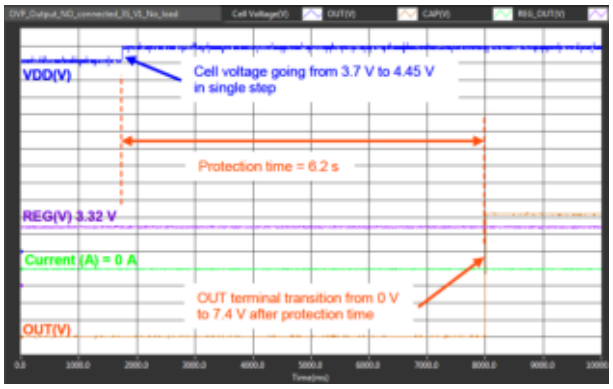


**Figure 8-4. Overvoltage Protection**

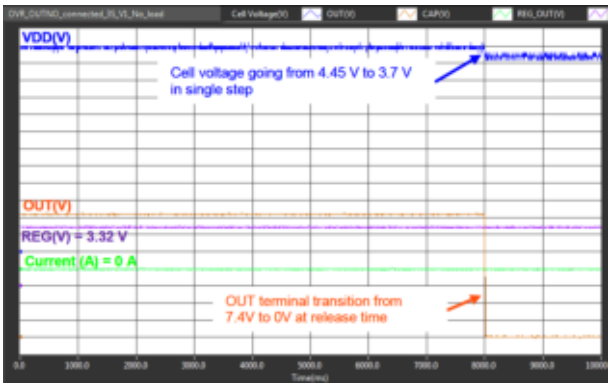


**Figure 8-5. Overvoltage Protection Release**

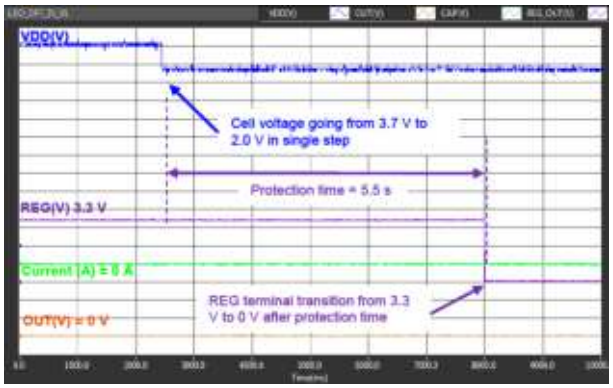


**Figure 8-6. Undervoltage Detection to Turn Off the Regulator**

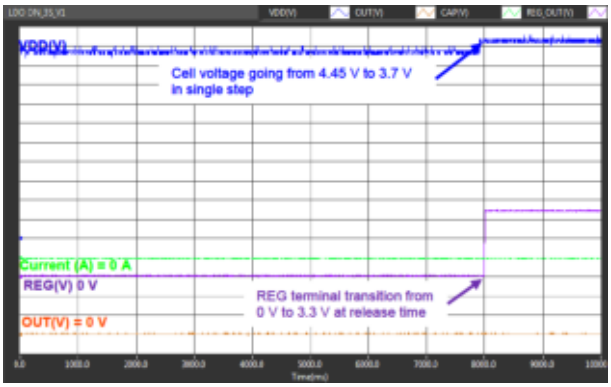


**Figure 8-7. Undervoltage Release to Switch On the Regulator**


Copyright © 2025 Texas Instruments Incorporated

# 9 Power Supply Recommendations

The maximum power is 20V for BQ2961 and BQ2962 on VDD.

**Note**

Connect VSS first during power-up.

# 10 Layout

## 10.1 Layout Guidelines

Use the following layout guidelines:

1. Ensure the RC filters for the Vx pins and VDD pin are placed as close as possible to the target terminal, reducing the tracing loop area.
2. The capacitor for REG should be placed close to the device terminals.
3. Ensure the trace connecting the fuse to the gate, source of the NFET to the Pack– is sufficient to withstand the current during a fuse blown event.

## 10.2 Layout Example

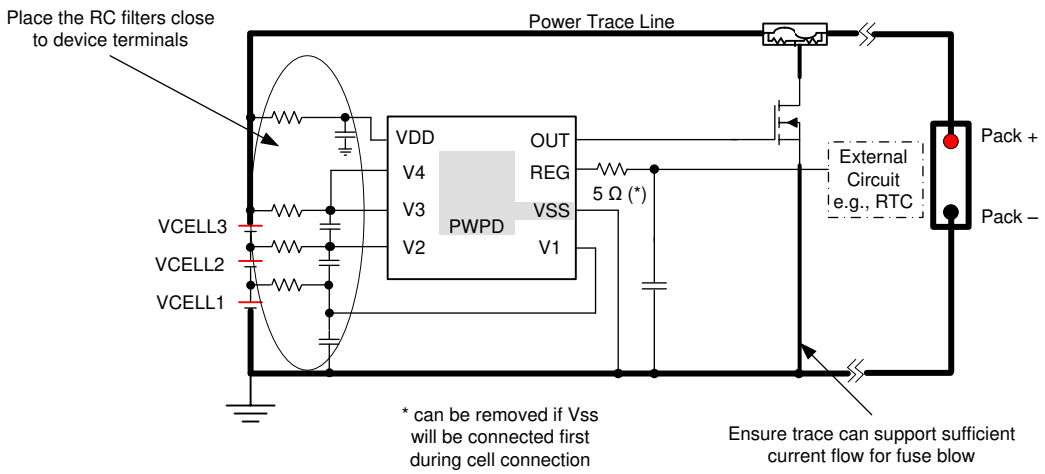


**Figure 10-1. Layout Example**

# 11 Device and Documentation Support

## 11.1 Device Support

### *11.1.1 Third-Party Products Disclaimer*

TI'S PUBLICATION OF INFORMATION REGARDING THIRD-PARTY PRODUCTS OR SERVICES DOES NOT CONSTITUTE AN ENDORSEMENT REGARDING THE SUITABILITY OF SUCH PRODUCTS OR SERVICES OR A WARRANTY, REPRESENTATION OR ENDORSEMENT OF SUCH PRODUCTS OR SERVICES, EITHER ALONE OR IN COMBINATION WITH ANY TI PRODUCT OR SERVICE.

## 11.2 Receiving Notification of Documentation Updates

To receive notification of documentation updates, navigate to the device product folder on ti.com. In the upper right corner, click on *Alert me* to register and receive a weekly digest of any product information that has changed. For change details, review the revision history included in any revised document.

## 11.3 Support Resources

TI E2E™ support forums are an engineer's go-to source for fast, verified answers and design help — straight from the experts. Search existing answers or ask your own question to get the quick design help you need.

Linked content is provided "AS IS" by the respective contributors. They do not constitute TI specifications and do not necessarily reflect TI's views; see TI's Terms of Use.

## 11.4 Trademarks

TI E2E™ is a trademark of Texas Instruments.
All trademarks are the property of their respective owners.

## 11.5 Electrostatic Discharge Caution

This integrated circuit can be damaged by ESD. Texas Instruments recommends that all integrated circuits be handled with appropriate precautions. Failure to observe proper handling and installation procedures can cause damage.

ESD damage can range from subtle performance degradation to complete device failure. Precision integrated circuits may be more susceptible to damage because very small parametric changes could cause the device not to meet its published specifications.

## 11.6 Glossary

| | |
|---|---|
| TI Glossary | This glossary lists and explains terms, acronyms, and definitions. |


Copyright © 2025 Texas Instruments Incorporated

## 12 Revision History

NOTE: Page numbers for previous revisions may differ from page numbers in the current version.

| Changes from Revision U (October 2024) to Revision V (September 2025) | Page |
|---|---|
| • Removed REG_EN pin from table in Pin Configuration and Functions | 4 |
| • Removed REG_EN from Absolute Maximum Ratings | 5 |
| • Removed REG_EN from Recommended Operating Conditions | 5 |
| • Removed REG_EN information from Electrical Characteristics | 6 |
| • Removed REG_EN pin from Functional Block Diagram | 10 |
| • Changed references of V3 to V4. Corrected figures in Section 7.4.4 | 12 |

| Changes from Revision T (August 2022) to Revision U (October 2024) | Page |
|---|---|
| • Added the BQ296235 device to the *Device Comparison Table* | 3 |

| Changes from Revision S (June 2022) to Revision T (August 2022) | Page |
|---|---|
| • Noted in the *Device Comparison Table* that the increased UV range is for future BQ2962 devices only | 3 |
| • Clarified future BQ2962 options | 9 |

| Changes from Revision R (April 2022) to Revision S (June 2022) | Page |
|---|---|
| • Increased the UV range for future BQ2962 device in the *Device Comparison Table* | 3 |

| Changes from Revision Q (January 2022) to Revision R (April 2022) | Page |
|---|---|
| • Changed the BQ296234 device to Production Data in the *Device Comparison Table* | 3 |

| Changes from Revision P (August 2021) to Revision Q (January 2022) | Page |
|---|---|
| • Added the BQ296234 PRODUCT PREVIEW device to the *Device Comparison Table* | 3 |

| Changes from Revision O (July 2021) to Revision P (August 2021) | Page |
|---|---|
| • Changed the BQ296227 and BQ296233 devices to Production Data in the *Device Comparison Table* | 3 |

## 13 Mechanical, Packaging, and Orderable Information

The following pages include mechanical, packaging, and orderable information. This information is the most current data available for the designated devices. This data is subject to change without notice and revision of this document. For browser-based versions of this data sheet, refer to the left-hand navigation.

## PACKAGING INFORMATION

| Orderable part number | Status (1) | Material type (2) | Package \| Pins | Package qty \| Carrier | RoHS (3) | Lead finish/ Ball material (4) | MSL rating/ Peak reflow (5) | Op temp (°C) | Part marking (6) |
|---|---|---|---|---|---|---|---|---|---|
| BQ296100DSGR | Active | Production | WSON (DSG) \| 8 | 3000 \| LARGE T&R | Yes | NIPDAU | Level-1-260C-UNLIM | -40 to 110 | 6100 |
| BQ296100DSGR.A | Active | Production | WSON (DSG) \| 8 | 3000 \| LARGE T&R | Yes | NIPDAU | Level-1-260C-UNLIM | -40 to 110 | 6100 |
| BQ296100DSGT | Active | Production | WSON (DSG) \| 8 | 250 \| SMALL T&R | Yes | NIPDAU | Level-1-260C-UNLIM | -40 to 110 | 6100 |
| BQ296100DSGT.A | Active | Production | WSON (DSG) \| 8 | 250 \| SMALL T&R | Yes | NIPDAU | Level-1-260C-UNLIM | -40 to 110 | 6100 |
| BQ296103DSGR | Active | Production | WSON (DSG) \| 8 | 3000 \| LARGE T&R | Yes | NIPDAU \| SN | Level-1-260C-UNLIM | -40 to 110 | 6103 |
| BQ296103DSGR.A | Active | Production | WSON (DSG) \| 8 | 3000 \| LARGE T&R | Yes | NIPDAU | Level-1-260C-UNLIM | -40 to 110 | 6103 |
| BQ296103DSGT | Active | Production | WSON (DSG) \| 8 | 250 \| SMALL T&R | Yes | NIPDAU \| SN | Level-1-260C-UNLIM | -40 to 110 | 6103 |
| BQ296103DSGT.A | Active | Production | WSON (DSG) \| 8 | 250 \| SMALL T&R | Yes | NIPDAU | Level-1-260C-UNLIM | -40 to 110 | 6103 |
| BQ296106DSGR | Active | Production | WSON (DSG) \| 8 | 3000 \| LARGE T&R | Yes | NIPDAU \| SN | Level-1-260C-UNLIM | -40 to 110 | 6106 |
| BQ296106DSGR.A | Active | Production | WSON (DSG) \| 8 | 3000 \| LARGE T&R | Yes | NIPDAU | Level-1-260C-UNLIM | -40 to 110 | 6106 |
| BQ296106DSGT | Active | Production | WSON (DSG) \| 8 | 250 \| SMALL T&R | Yes | NIPDAU \| SN | Level-1-260C-UNLIM | -40 to 110 | 6106 |
| BQ296106DSGT.A | Active | Production | WSON (DSG) \| 8 | 250 \| SMALL T&R | Yes | NIPDAU | Level-1-260C-UNLIM | -40 to 110 | 6106 |
| BQ296107DSGR | Active | Production | WSON (DSG) \| 8 | 3000 \| LARGE T&R | Yes | NIPDAU \| SN | Level-1-260C-UNLIM | -40 to 110 | 6107 |
| BQ296107DSGR.A | Active | Production | WSON (DSG) \| 8 | 3000 \| LARGE T&R | Yes | NIPDAU | Level-1-260C-UNLIM | -40 to 110 | 6107 |
| BQ296107DSGT | Active | Production | WSON (DSG) \| 8 | 250 \| SMALL T&R | Yes | NIPDAU \| SN | Level-1-260C-UNLIM | -40 to 110 | 6107 |
| BQ296107DSGT.A | Active | Production | WSON (DSG) \| 8 | 250 \| SMALL T&R | Yes | NIPDAU | Level-1-260C-UNLIM | -40 to 110 | 6107 |
| BQ296111DSGR | Active | Production | WSON (DSG) \| 8 | 3000 \| LARGE T&R | Yes | NIPDAU | Level-2-260C-1 YEAR | -40 to 110 | 6111 |
| BQ296111DSGR.A | Active | Production | WSON (DSG) \| 8 | 3000 \| LARGE T&R | Yes | NIPDAU | Level-2-260C-1 YEAR | -40 to 110 | 6111 |
| BQ296111DSGT | Active | Production | WSON (DSG) \| 8 | 250 \| SMALL T&R | Yes | NIPDAU | Level-1-260C-UNLIM | -40 to 110 | 6111 |
| BQ296111DSGT.A | Active | Production | WSON (DSG) \| 8 | 250 \| SMALL T&R | Yes | NIPDAU | Level-1-260C-UNLIM | -40 to 110 | 6111 |
| BQ296112DSGR | Active | Production | WSON (DSG) \| 8 | 3000 \| LARGE T&R | Yes | NIPDAU | Level-2-260C-1 YEAR | -40 to 110 | 6112 |
| BQ296112DSGR.A | Active | Production | WSON (DSG) \| 8 | 3000 \| LARGE T&R | Yes | NIPDAU | Level-2-260C-1 YEAR | -40 to 110 | 6112 |
| BQ296112DSGT | Active | Production | WSON (DSG) \| 8 | 250 \| SMALL T&R | Yes | NIPDAU | Level-2-260C-1 YEAR | -40 to 110 | 6112 |
| BQ296112DSGT.A | Active | Production | WSON (DSG) \| 8 | 250 \| SMALL T&R | Yes | NIPDAU | Level-2-260C-1 YEAR | -40 to 110 | 6112 |
| BQ296113DSGR | Active | Production | WSON (DSG) \| 8 | 3000 \| LARGE T&R | Yes | NIPDAU | Level-1-260C-UNLIM | -40 to 110 | 6113 |
| BQ296113DSGR.A | Active | Production | WSON (DSG) \| 8 | 3000 \| LARGE T&R | Yes | NIPDAU | Level-1-260C-UNLIM | -40 to 110 | 6113 |
| BQ296113DSGT | Active | Production | WSON (DSG) \| 8 | 250 \| SMALL T&R | Yes | NIPDAU | Level-1-260C-UNLIM | -40 to 110 | 6113 |
| BQ296113DSGT.A | Active | Production | WSON (DSG) \| 8 | 250 \| SMALL T&R | Yes | NIPDAU | Level-1-260C-UNLIM | -40 to 110 | 6113 |
| BQ296114DSGR | Active | Production | WSON (DSG) \| 8 | 3000 \| LARGE T&R | Yes | NIPDAU | Level-1-260C-UNLIM | -40 to 110 | 6114 |

| Orderable part number | Status (1) | Material type (2) | Package \| Pins | Package qty \| Carrier | RoHS (3) | Lead finish/ Ball material (4) | MSL rating/ Peak reflow (5) | Op temp (°C) | Part marking (6) |
|---|---|---|---|---|---|---|---|---|---|
| BQ296114DSGR.A | Active | Production | WSON (DSG) \| 8 | 3000 \| LARGE T&R | Yes | NIPDAU | Level-1-260C-UNLIM | -40 to 110 | 6114 |
| BQ296114DSGT | Active | Production | WSON (DSG) \| 8 | 250 \| SMALL T&R | Yes | NIPDAU | Level-1-260C-UNLIM | -40 to 110 | 6114 |
| BQ296114DSGT.A | Active | Production | WSON (DSG) \| 8 | 250 \| SMALL T&R | Yes | NIPDAU | Level-1-260C-UNLIM | -40 to 110 | 6114 |
| BQ296115DSGR | Active | Production | WSON (DSG) \| 8 | 3000 \| LARGE T&R | Yes | SN | Level-1-260C-UNLIM | -40 to 110 | 6115 |
| BQ296115DSGR.A | Active | Production | WSON (DSG) \| 8 | 3000 \| LARGE T&R | Yes | SN | Level-1-260C-UNLIM | -40 to 110 | 6115 |
| BQ296202DSGR | Active | Production | WSON (DSG) \| 8 | 3000 \| LARGE T&R | Yes | NIPDAU \| SN | Level-1-260C-UNLIM | -40 to 110 | 6202 |
| BQ296202DSGR.A | Active | Production | WSON (DSG) \| 8 | 3000 \| LARGE T&R | Yes | NIPDAU | Level-1-260C-UNLIM | -40 to 110 | 6202 |
| BQ296202DSGT | Active | Production | WSON (DSG) \| 8 | 250 \| SMALL T&R | Yes | NIPDAU \| SN | Level-1-260C-UNLIM | -40 to 110 | 6202 |
| BQ296202DSGT.A | Active | Production | WSON (DSG) \| 8 | 250 \| SMALL T&R | Yes | NIPDAU | Level-1-260C-UNLIM | -40 to 110 | 6202 |
| BQ296203DSGR | Active | Production | WSON (DSG) \| 8 | 3000 \| LARGE T&R | Yes | NIPDAU \| SN | Level-1-260C-UNLIM | -40 to 110 | 6203 |
| BQ296203DSGR.A | Active | Production | WSON (DSG) \| 8 | 3000 \| LARGE T&R | Yes | NIPDAU | Level-1-260C-UNLIM | -40 to 110 | 6203 |
| BQ296203DSGT | Active | Production | WSON (DSG) \| 8 | 250 \| SMALL T&R | Yes | NIPDAU \| SN | Level-1-260C-UNLIM | -40 to 110 | 6203 |
| BQ296203DSGT.A | Active | Production | WSON (DSG) \| 8 | 250 \| SMALL T&R | Yes | NIPDAU | Level-1-260C-UNLIM | -40 to 110 | 6203 |
| BQ296212DSGR | Active | Production | WSON (DSG) \| 8 | 3000 \| LARGE T&R | Yes | NIPDAU | Level-2-260C-1 YEAR | -40 to 110 | 6212 |
| BQ296212DSGR.A | Active | Production | WSON (DSG) \| 8 | 3000 \| LARGE T&R | Yes | NIPDAU | Level-2-260C-1 YEAR | -40 to 110 | 6212 |
| BQ296212DSGT | Active | Production | WSON (DSG) \| 8 | 250 \| SMALL T&R | Yes | NIPDAU | Level-2-260C-1 YEAR | -40 to 110 | 6212 |
| BQ296212DSGT.A | Active | Production | WSON (DSG) \| 8 | 250 \| SMALL T&R | Yes | NIPDAU | Level-2-260C-1 YEAR | -40 to 110 | 6212 |
| BQ296213DSGR | Active | Production | WSON (DSG) \| 8 | 3000 \| LARGE T&R | Yes | NIPDAU | Level-1-260C-UNLIM | -40 to 110 | 6213 |
| BQ296213DSGR.A | Active | Production | WSON (DSG) \| 8 | 3000 \| LARGE T&R | Yes | NIPDAU | Level-1-260C-UNLIM | -40 to 110 | 6213 |
| BQ296213DSGT | Active | Production | WSON (DSG) \| 8 | 250 \| SMALL T&R | Yes | NIPDAU | Level-1-260C-UNLIM | -40 to 110 | 6213 |
| BQ296213DSGT.A | Active | Production | WSON (DSG) \| 8 | 250 \| SMALL T&R | Yes | NIPDAU | Level-1-260C-UNLIM | -40 to 110 | 6213 |
| BQ296215DSGR | Active | Production | WSON (DSG) \| 8 | 3000 \| LARGE T&R | Yes | SN | Level-1-260C-UNLIM | -40 to 110 | 6215 |
| BQ296215DSGR.A | Active | Production | WSON (DSG) \| 8 | 3000 \| LARGE T&R | Yes | SN | Level-1-260C-UNLIM | -40 to 110 | 6215 |
| BQ296215DSGT | Active | Production | WSON (DSG) \| 8 | 250 \| SMALL T&R | Yes | SN | Level-1-260C-UNLIM | -40 to 110 | 6215 |
| BQ296215DSGT.A | Active | Production | WSON (DSG) \| 8 | 250 \| SMALL T&R | Yes | SN | Level-1-260C-UNLIM | -40 to 110 | 6215 |
| BQ296216DSGR | Active | Production | WSON (DSG) \| 8 | 3000 \| LARGE T&R | Yes | NIPDAU | Level-1-260C-UNLIM | -40 to 110 | 6216 |
| BQ296216DSGR.A | Active | Production | WSON (DSG) \| 8 | 3000 \| LARGE T&R | Yes | NIPDAU | Level-1-260C-UNLIM | -40 to 110 | 6216 |
| BQ296216DSGT | Active | Production | WSON (DSG) \| 8 | 250 \| SMALL T&R | Yes | NIPDAU \| SN | Level-1-260C-UNLIM | -40 to 110 | 6216 |
| BQ296216DSGT.A | Active | Production | WSON (DSG) \| 8 | 250 \| SMALL T&R | Yes | NIPDAU | Level-1-260C-UNLIM | -40 to 110 | 6216 |
| BQ296217DSGR | Active | Production | WSON (DSG) \| 8 | 3000 \| LARGE T&R | Yes | NIPDAU \| SN | Level-1-260C-UNLIM | -40 to 110 | 6217 |
| BQ296217DSGR.A | Active | Production | WSON (DSG) \| 8 | 3000 \| LARGE T&R | Yes | NIPDAU | Level-1-260C-UNLIM | -40 to 110 | 6217 |

| Orderable part number | Status (1) | Material type (2) | Package \| Pins | Package qty \| Carrier | RoHS (3) | Lead finish/ Ball material (4) | MSL rating/ Peak reflow (5) | Op temp (°C) | Part marking (6) |
|---|---|---|---|---|---|---|---|---|---|
| BQ296217DSGT | Active | Production | WSON (DSG) \| 8 | 250 \| SMALL T&R | Yes | NIPDAU \| SN | Level-1-260C-UNLIM | -40 to 110 | 6217 |
| BQ296217DSGT.A | Active | Production | WSON (DSG) \| 8 | 250 \| SMALL T&R | Yes | NIPDAU | Level-1-260C-UNLIM | -40 to 110 | 6217 |
| BQ296221DSGR | Active | Production | WSON (DSG) \| 8 | 3000 \| LARGE T&R | Yes | NIPDAU \| SN | Level-2-260C-1 YEAR | -40 to 110 | 6221 |
| BQ296221DSGR.A | Active | Production | WSON (DSG) \| 8 | 3000 \| LARGE T&R | Yes | NIPDAU | Level-2-260C-1 YEAR | -40 to 110 | 6221 |
| BQ296221DSGT | Active | Production | WSON (DSG) \| 8 | 250 \| SMALL T&R | Yes | SN | Level-1-260C-UNLIM | -40 to 110 | 6221 |
| BQ296221DSGT.A | Active | Production | WSON (DSG) \| 8 | 250 \| SMALL T&R | Yes | SN | Level-1-260C-UNLIM | -40 to 110 | 6221 |
| BQ296222DSGR | Active | Production | WSON (DSG) \| 8 | 3000 \| LARGE T&R | Yes | NIPDAU \| SN | Level-1-260C-UNLIM | -40 to 110 | 6222 |
| BQ296222DSGR.A | Active | Production | WSON (DSG) \| 8 | 3000 \| LARGE T&R | Yes | NIPDAU | Level-1-260C-UNLIM | -40 to 110 | 6222 |
| BQ296222DSGT | Active | Production | WSON (DSG) \| 8 | 250 \| SMALL T&R | Yes | SN | Level-1-260C-UNLIM | -40 to 110 | 6222 |
| BQ296222DSGT.A | Active | Production | WSON (DSG) \| 8 | 250 \| SMALL T&R | Yes | SN | Level-1-260C-UNLIM | -40 to 110 | 6222 |
| BQ296223DSGR | Active | Production | WSON (DSG) \| 8 | 3000 \| LARGE T&R | Yes | NIPDAU \| SN | Level-1-260C-UNLIM | -40 to 110 | 6223 |
| BQ296223DSGR.A | Active | Production | WSON (DSG) \| 8 | 3000 \| LARGE T&R | Yes | NIPDAU | Level-1-260C-UNLIM | -40 to 110 | 6223 |
| BQ296223DSGT | Active | Production | WSON (DSG) \| 8 | 250 \| SMALL T&R | Yes | SN | Level-1-260C-UNLIM | -40 to 110 | 6223 |
| BQ296223DSGT.A | Active | Production | WSON (DSG) \| 8 | 250 \| SMALL T&R | Yes | SN | Level-1-260C-UNLIM | -40 to 110 | 6223 |
| BQ296224DSGR | Active | Production | WSON (DSG) \| 8 | 3000 \| LARGE T&R | Yes | SN | Level-1-260C-UNLIM | -40 to 110 | 6224 |
| BQ296224DSGR.A | Active | Production | WSON (DSG) \| 8 | 3000 \| LARGE T&R | Yes | SN | Level-1-260C-UNLIM | -40 to 110 | 6224 |
| BQ296224DSGT | Active | Production | WSON (DSG) \| 8 | 250 \| SMALL T&R | Yes | SN | Level-1-260C-UNLIM | -40 to 110 | 6224 |
| BQ296224DSGT.A | Active | Production | WSON (DSG) \| 8 | 250 \| SMALL T&R | Yes | SN | Level-1-260C-UNLIM | -40 to 110 | 6224 |
| BQ296226DSGR | Active | Production | WSON (DSG) \| 8 | 3000 \| LARGE T&R | Yes | SN | Level-1-260C-UNLIM | -40 to 110 | 6226 |
| BQ296226DSGR.A | Active | Production | WSON (DSG) \| 8 | 3000 \| LARGE T&R | Yes | SN | Level-1-260C-UNLIM | -40 to 110 | 6226 |
| BQ296226DSGT | Active | Production | WSON (DSG) \| 8 | 250 \| SMALL T&R | Yes | SN | Level-1-260C-UNLIM | -40 to 110 | 6226 |
| BQ296226DSGT.A | Active | Production | WSON (DSG) \| 8 | 250 \| SMALL T&R | Yes | SN | Level-1-260C-UNLIM | -40 to 110 | 6226 |
| BQ296227DSGR | Active | Production | WSON (DSG) \| 8 | 3000 \| LARGE T&R | Yes | SN | Level-1-260C-UNLIM | -40 to 110 | 6227 |
| BQ296227DSGR.A | Active | Production | WSON (DSG) \| 8 | 3000 \| LARGE T&R | Yes | SN | Level-1-260C-UNLIM | -40 to 110 | 6227 |
| BQ296228DSGR | Active | Production | WSON (DSG) \| 8 | 3000 \| LARGE T&R | Yes | NIPDAU \| SN | Level-1-260C-UNLIM | -40 to 110 | 6228 |
| BQ296228DSGR.A | Active | Production | WSON (DSG) \| 8 | 3000 \| LARGE T&R | Yes | NIPDAU | Level-1-260C-UNLIM | -40 to 110 | 6228 |
| BQ296228DSGT | Active | Production | WSON (DSG) \| 8 | 250 \| SMALL T&R | Yes | SN | Level-1-260C-UNLIM | -40 to 110 | 6228 |
| BQ296228DSGT.A | Active | Production | WSON (DSG) \| 8 | 250 \| SMALL T&R | Yes | SN | Level-1-260C-UNLIM | -40 to 110 | 6228 |
| BQ296229DSGR | Active | Production | WSON (DSG) \| 8 | 3000 \| LARGE T&R | Yes | NIPDAU \| SN | Level-1-260C-UNLIM | -40 to 110 | 6229 |
| BQ296229DSGR.A | Active | Production | WSON (DSG) \| 8 | 3000 \| LARGE T&R | Yes | NIPDAU | Level-1-260C-UNLIM | -40 to 110 | 6229 |
| BQ296229DSGT | Active | Production | WSON (DSG) \| 8 | 250 \| SMALL T&R | Yes | SN | Level-1-260C-UNLIM | -40 to 110 | 6229 |

| Orderable part number | Status (1) | Material type (2) | Package \| Pins | Package qty \| Carrier | RoHS (3) | Lead finish/ Ball material (4) | MSL rating/ Peak reflow (5) | Op temp (°C) | Part marking (6) |
|---|---|---|---|---|---|---|---|---|---|
| BQ296229DSGT.A | Active | Production | WSON (DSG) \| 8 | 250 \| SMALL T&R | Yes | SN | Level-1-260C-UNLIM | -40 to 110 | 6229 |
| BQ296230DSGR | Active | Production | WSON (DSG) \| 8 | 3000 \| LARGE T&R | Yes | SN | Level-1-260C-UNLIM | -40 to 110 | 6230 |
| BQ296230DSGR.A | Active | Production | WSON (DSG) \| 8 | 3000 \| LARGE T&R | Yes | SN | Level-1-260C-UNLIM | -40 to 110 | 6230 |
| BQ296230DSGT | Active | Production | WSON (DSG) \| 8 | 250 \| SMALL T&R | Yes | SN | Level-1-260C-UNLIM | -40 to 110 | 6230 |
| BQ296230DSGT.A | Active | Production | WSON (DSG) \| 8 | 250 \| SMALL T&R | Yes | SN | Level-1-260C-UNLIM | -40 to 110 | 6230 |
| BQ296231DSGR | Active | Production | WSON (DSG) \| 8 | 3000 \| LARGE T&R | Yes | NIPDAU \| SN | Level-1-260C-UNLIM | -40 to 110 | 6231 |
| BQ296231DSGR.A | Active | Production | WSON (DSG) \| 8 | 3000 \| LARGE T&R | Yes | NIPDAU | Level-1-260C-UNLIM | -40 to 110 | 6231 |
| BQ296231DSGT | Active | Production | WSON (DSG) \| 8 | 250 \| SMALL T&R | Yes | SN | Level-1-260C-UNLIM | -40 to 110 | 6231 |
| BQ296231DSGT.A | Active | Production | WSON (DSG) \| 8 | 250 \| SMALL T&R | Yes | SN | Level-1-260C-UNLIM | -40 to 110 | 6231 |
| BQ296232DSGR | Active | Production | WSON (DSG) \| 8 | 3000 \| LARGE T&R | Yes | SN | Level-1-260C-UNLIM | -40 to 110 | 6232 |
| BQ296232DSGR.A | Active | Production | WSON (DSG) \| 8 | 3000 \| LARGE T&R | Yes | SN | Level-1-260C-UNLIM | -40 to 110 | 6232 |
| BQ296232DSGT | Active | Production | WSON (DSG) \| 8 | 250 \| SMALL T&R | Yes | SN | Level-1-260C-UNLIM | -40 to 110 | 6232 |
| BQ296232DSGT.A | Active | Production | WSON (DSG) \| 8 | 250 \| SMALL T&R | Yes | SN | Level-1-260C-UNLIM | -40 to 110 | 6232 |
| BQ296233DSGR | Active | Production | WSON (DSG) \| 8 | 3000 \| LARGE T&R | Yes | SN | Level-1-260C-UNLIM | -40 to 110 | 6233 |
| BQ296233DSGR.A | Active | Production | WSON (DSG) \| 8 | 3000 \| LARGE T&R | Yes | SN | Level-1-260C-UNLIM | -40 to 110 | 6233 |
| BQ296234DSGR | Active | Production | WSON (DSG) \| 8 | 3000 \| LARGE T&R | Yes | NIPDAU \| SN | Level-1-260C-UNLIM | -40 to 110 | 6234 |
| BQ296234DSGR.A | Active | Production | WSON (DSG) \| 8 | 3000 \| LARGE T&R | Yes | NIPDAU | Level-1-260C-UNLIM | -40 to 110 | 6234 |
| BQ296235DSGR | Active | Production | WSON (DSG) \| 8 | 3000 \| LARGE T&R | Yes | NIPDAU | Level-1-260C-UNLIM | -40 to 110 | 6235 |
| BQ296235DSGR.A | Active | Production | WSON (DSG) \| 8 | 3000 \| LARGE T&R | Yes | NIPDAU | Level-1-260C-UNLIM | -40 to 110 | 6235 |

(1) **Status:** For more details on status, see our product life cycle.

(2) **Material type:** When designated, preproduction parts are prototypes/experimental devices, and are not yet approved or released for full production. Testing and final process, including without limitation quality assurance, reliability performance testing, and/or process qualification, may not yet be complete, and this item is subject to further changes or possible discontinuation. If available for ordering, purchases will be subject to an additional waiver at checkout, and are intended for early internal evaluation purposes only. These items are sold without warranties of any kind.

(3) **RoHS values:** Yes, No, RoHS Exempt. See the TI RoHS Statement for additional information and value definition.

(4) **Lead finish/Ball material:** Parts may have multiple material finish options. Finish options are separated by a vertical ruled line. Lead finish/Ball material values may wrap to two lines if the finish value exceeds the maximum column width.

(5) **MSL rating/Peak reflow:** The moisture sensitivity level ratings and peak solder (reflow) temperatures. In the event that a part has multiple moisture sensitivity ratings, only the lowest level per JEDEC standards is shown. Refer to the shipping label for the actual reflow temperature that will be used to mount the part to the printed circuit board.

(6) **Part marking:** There may be an additional marking, which relates to the logo, the lot trace code information, or the environmental category of the part.

Multiple part markings will be inside parentheses. Only one part marking contained in parentheses and separated by a "~" will appear on a part. If a line is indented then it is a continuation of the previous line and the two combined represent the entire part marking for that device.

**Important Information and Disclaimer:**The information provided on this page represents TI's knowledge and belief as of the date that it is provided. TI bases its knowledge and belief on information provided by third parties, and makes no representation or warranty as to the accuracy of such information. Efforts are underway to better integrate information from third parties. TI has taken and continues to take reasonable steps to provide representative and accurate information but may not have conducted destructive testing or chemical analysis on incoming materials and chemicals. TI and TI suppliers consider certain information to be proprietary, and thus CAS numbers and other limited information may not be available for release.

In no event shall TI's liability arising out of such information exceed the total purchase price of the TI part(s) at issue in this document sold by TI to Customer on an annual basis.

## TAPE AND REEL INFORMATION

**REEL DIMENSIONS**

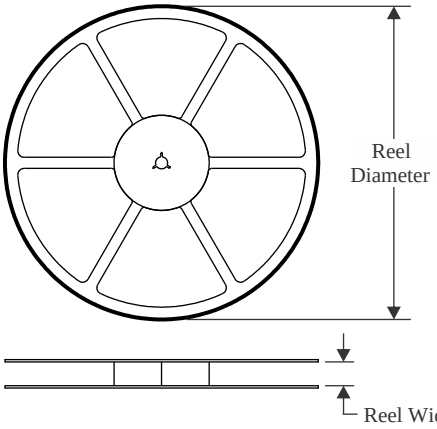


**TAPE DIMENSIONS**

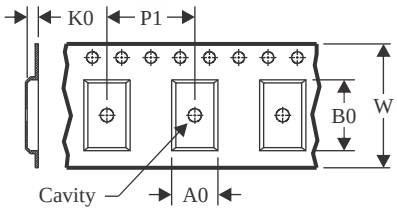


| | |
|---|---|
| A0 | Dimension designed to accommodate the component width |
| B0 | Dimension designed to accommodate the component length |
| K0 | Dimension designed to accommodate the component thickness |
| W | Overall width of the carrier tape |
| P1 | Pitch between successive cavity centers |

**QUADRANT ASSIGNMENTS FOR PIN 1 ORIENTATION IN TAPE**

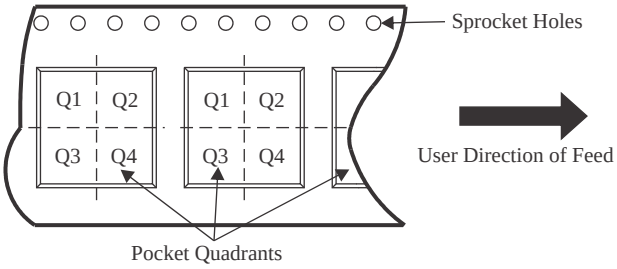


*All dimensions are nominal

| Device | Package Type | Package Drawing | Pins | SPQ | Reel Diameter (mm) | Reel Width W1 (mm) | A0 (mm) | B0 (mm) | K0 (mm) | P1 (mm) | W (mm) | Pin1 Quadrant |
|---|---|---|---|---|---|---|---|---|---|---|---|---|
| BQ296100DSGR | WSON | DSG | 8 | 3000 | 180.0 | 8.4 | 2.3 | 2.3 | 1.15 | 4.0 | 8.0 | Q2 |
| BQ296100DSGT | WSON | DSG | 8 | 250 | 180.0 | 8.4 | 2.3 | 2.3 | 1.15 | 4.0 | 8.0 | Q2 |
| BQ296103DSGR | WSON | DSG | 8 | 3000 | 180.0 | 8.4 | 2.3 | 2.3 | 1.15 | 4.0 | 8.0 | Q2 |
| BQ296103DSGT | WSON | DSG | 8 | 250 | 180.0 | 8.4 | 2.3 | 2.3 | 1.15 | 4.0 | 8.0 | Q2 |
| BQ296106DSGR | WSON | DSG | 8 | 3000 | 180.0 | 8.4 | 2.3 | 2.3 | 1.15 | 4.0 | 8.0 | Q2 |
| BQ296106DSGT | WSON | DSG | 8 | 250 | 180.0 | 8.4 | 2.3 | 2.3 | 1.15 | 4.0 | 8.0 | Q2 |
| BQ296107DSGR | WSON | DSG | 8 | 3000 | 180.0 | 8.4 | 2.3 | 2.3 | 1.15 | 4.0 | 8.0 | Q2 |
| BQ296107DSGT | WSON | DSG | 8 | 250 | 180.0 | 8.4 | 2.3 | 2.3 | 1.15 | 4.0 | 8.0 | Q2 |
| BQ296111DSGR | WSON | DSG | 8 | 3000 | 180.0 | 8.4 | 2.3 | 2.3 | 1.15 | 4.0 | 8.0 | Q2 |
| BQ296111DSGT | WSON | DSG | 8 | 250 | 180.0 | 8.4 | 2.3 | 2.3 | 1.15 | 4.0 | 8.0 | Q2 |
| BQ296112DSGR | WSON | DSG | 8 | 3000 | 180.0 | 8.4 | 2.3 | 2.3 | 1.15 | 4.0 | 8.0 | Q2 |
| BQ296112DSGT | WSON | DSG | 8 | 250 | 180.0 | 8.4 | 2.3 | 2.3 | 1.15 | 4.0 | 8.0 | Q2 |
| BQ296113DSGR | WSON | DSG | 8 | 3000 | 180.0 | 8.4 | 2.3 | 2.3 | 1.15 | 4.0 | 8.0 | Q2 |
| BQ296113DSGT | WSON | DSG | 8 | 250 | 180.0 | 8.4 | 2.3 | 2.3 | 1.15 | 4.0 | 8.0 | Q2 |
| BQ296114DSGR | WSON | DSG | 8 | 3000 | 180.0 | 8.4 | 2.3 | 2.3 | 1.15 | 4.0 | 8.0 | Q2 |
| BQ296114DSGT | WSON | DSG | 8 | 250 | 180.0 | 8.4 | 2.3 | 2.3 | 1.15 | 4.0 | 8.0 | Q2 |

| Device | Package Type | Package Drawing | Pins | SPQ | Reel Diameter (mm) | Reel Width W1 (mm) | A0 (mm) | B0 (mm) | K0 (mm) | P1 (mm) | W (mm) | Pin1 Quadrant |
|---|---|---|---|---|---|---|---|---|---|---|---|---|
| BQ296115DSGR | WSON | DSG | 8 | 3000 | 180.0 | 8.4 | 2.3 | 2.3 | 1.15 | 4.0 | 8.0 | Q2 |
| BQ296202DSGR | WSON | DSG | 8 | 3000 | 180.0 | 8.4 | 2.3 | 2.3 | 1.15 | 4.0 | 8.0 | Q2 |
| BQ296202DSGT | WSON | DSG | 8 | 250 | 180.0 | 8.4 | 2.3 | 2.3 | 1.15 | 4.0 | 8.0 | Q2 |
| BQ296203DSGR | WSON | DSG | 8 | 3000 | 180.0 | 8.4 | 2.3 | 2.3 | 1.15 | 4.0 | 8.0 | Q2 |
| BQ296203DSGR | WSON | DSG | 8 | 3000 | 178.0 | 8.4 | 2.3 | 2.3 | 1.15 | 4.0 | 8.0 | Q2 |
| BQ296203DSGT | WSON | DSG | 8 | 250 | 180.0 | 8.4 | 2.3 | 2.3 | 1.15 | 4.0 | 8.0 | Q2 |
| BQ296212DSGR | WSON | DSG | 8 | 3000 | 180.0 | 8.4 | 2.3 | 2.3 | 1.15 | 4.0 | 8.0 | Q2 |
| BQ296212DSGT | WSON | DSG | 8 | 250 | 180.0 | 8.4 | 2.3 | 2.3 | 1.15 | 4.0 | 8.0 | Q2 |
| BQ296213DSGR | WSON | DSG | 8 | 3000 | 180.0 | 8.4 | 2.3 | 2.3 | 1.15 | 4.0 | 8.0 | Q2 |
| BQ296213DSGT | WSON | DSG | 8 | 250 | 180.0 | 8.4 | 2.3 | 2.3 | 1.15 | 4.0 | 8.0 | Q2 |
| BQ296215DSGR | WSON | DSG | 8 | 3000 | 180.0 | 8.4 | 2.3 | 2.3 | 1.15 | 4.0 | 8.0 | Q2 |
| BQ296215DSGT | WSON | DSG | 8 | 250 | 180.0 | 8.4 | 2.3 | 2.3 | 1.15 | 4.0 | 8.0 | Q2 |
| BQ296216DSGR | WSON | DSG | 8 | 3000 | 178.0 | 8.4 | 2.3 | 2.3 | 1.15 | 4.0 | 8.0 | Q2 |
| BQ296216DSGT | WSON | DSG | 8 | 250 | 180.0 | 8.4 | 2.3 | 2.3 | 1.15 | 4.0 | 8.0 | Q2 |
| BQ296217DSGR | WSON | DSG | 8 | 3000 | 180.0 | 8.4 | 2.3 | 2.3 | 1.15 | 4.0 | 8.0 | Q2 |
| BQ296217DSGT | WSON | DSG | 8 | 250 | 180.0 | 8.4 | 2.3 | 2.3 | 1.15 | 4.0 | 8.0 | Q2 |
| BQ296221DSGR | WSON | DSG | 8 | 3000 | 178.0 | 8.4 | 2.3 | 2.3 | 1.15 | 4.0 | 8.0 | Q3 |
| BQ296221DSGT | WSON | DSG | 8 | 250 | 180.0 | 8.4 | 2.3 | 2.3 | 1.15 | 4.0 | 8.0 | Q3 |
| BQ296222DSGR | WSON | DSG | 8 | 3000 | 178.0 | 8.4 | 2.3 | 2.3 | 1.15 | 4.0 | 8.0 | Q3 |
| BQ296222DSGT | WSON | DSG | 8 | 250 | 180.0 | 8.4 | 2.3 | 2.3 | 1.15 | 4.0 | 8.0 | Q3 |
| BQ296223DSGR | WSON | DSG | 8 | 3000 | 178.0 | 8.4 | 2.3 | 2.3 | 1.15 | 4.0 | 8.0 | Q3 |
| BQ296223DSGT | WSON | DSG | 8 | 250 | 180.0 | 8.4 | 2.3 | 2.3 | 1.15 | 4.0 | 8.0 | Q3 |
| BQ296224DSGR | WSON | DSG | 8 | 3000 | 180.0 | 8.4 | 2.3 | 2.3 | 1.15 | 4.0 | 8.0 | Q3 |
| BQ296224DSGT | WSON | DSG | 8 | 250 | 180.0 | 8.4 | 2.3 | 2.3 | 1.15 | 4.0 | 8.0 | Q3 |
| BQ296226DSGR | WSON | DSG | 8 | 3000 | 180.0 | 8.4 | 2.3 | 2.3 | 1.15 | 4.0 | 8.0 | Q3 |
| BQ296226DSGT | WSON | DSG | 8 | 250 | 180.0 | 8.4 | 2.3 | 2.3 | 1.15 | 4.0 | 8.0 | Q3 |
| BQ296227DSGR | WSON | DSG | 8 | 3000 | 180.0 | 8.4 | 2.3 | 2.3 | 1.15 | 4.0 | 8.0 | Q3 |
| BQ296228DSGR | WSON | DSG | 8 | 3000 | 178.0 | 8.4 | 2.3 | 2.3 | 1.15 | 4.0 | 8.0 | Q3 |
| BQ296228DSGT | WSON | DSG | 8 | 250 | 180.0 | 8.4 | 2.3 | 2.3 | 1.15 | 4.0 | 8.0 | Q3 |
| BQ296229DSGR | WSON | DSG | 8 | 3000 | 178.0 | 8.4 | 2.3 | 2.3 | 1.15 | 4.0 | 8.0 | Q3 |
| BQ296229DSGT | WSON | DSG | 8 | 250 | 180.0 | 8.4 | 2.3 | 2.3 | 1.15 | 4.0 | 8.0 | Q3 |
| BQ296230DSGR | WSON | DSG | 8 | 3000 | 180.0 | 8.4 | 2.3 | 2.3 | 1.15 | 4.0 | 8.0 | Q3 |
| BQ296230DSGT | WSON | DSG | 8 | 250 | 180.0 | 8.4 | 2.3 | 2.3 | 1.15 | 4.0 | 8.0 | Q3 |
| BQ296231DSGR | WSON | DSG | 8 | 3000 | 178.0 | 8.4 | 2.3 | 2.3 | 1.15 | 4.0 | 8.0 | Q3 |
| BQ296231DSGT | WSON | DSG | 8 | 250 | 180.0 | 8.4 | 2.3 | 2.3 | 1.15 | 4.0 | 8.0 | Q3 |
| BQ296232DSGR | WSON | DSG | 8 | 3000 | 180.0 | 8.4 | 2.3 | 2.3 | 1.15 | 4.0 | 8.0 | Q3 |
| BQ296232DSGT | WSON | DSG | 8 | 250 | 180.0 | 8.4 | 2.3 | 2.3 | 1.15 | 4.0 | 8.0 | Q3 |
| BQ296233DSGR | WSON | DSG | 8 | 3000 | 180.0 | 8.4 | 2.3 | 2.3 | 1.15 | 4.0 | 8.0 | Q3 |
| BQ296234DSGR | WSON | DSG | 8 | 3000 | 178.0 | 8.4 | 2.3 | 2.3 | 1.15 | 4.0 | 8.0 | Q3 |
| BQ296235DSGR | WSON | DSG | 8 | 3000 | 180.0 | 8.4 | 2.3 | 2.3 | 1.15 | 4.0 | 8.0 | Q3 |

TAPE AND REEL BOX DIMENSIONS

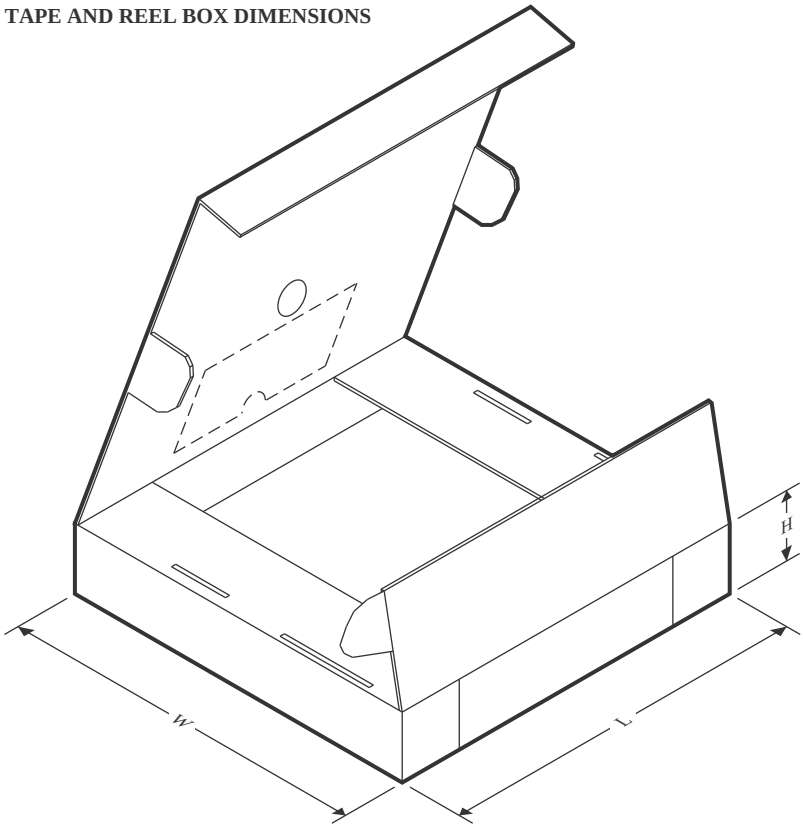


*All dimensions are nominal

| Device | Package Type | Package Drawing | Pins | SPQ | Length (mm) | Width (mm) | Height (mm) |
|---|---|---|---|---|---|---|---|
| BQ296100DSGR | WSON | DSG | 8 | 3000 | 182.0 | 182.0 | 20.0 |
| BQ296100DSGT | WSON | DSG | 8 | 250 | 182.0 | 182.0 | 20.0 |
| BQ296103DSGR | WSON | DSG | 8 | 3000 | 182.0 | 182.0 | 20.0 |
| BQ296103DSGT | WSON | DSG | 8 | 250 | 182.0 | 182.0 | 20.0 |
| BQ296106DSGR | WSON | DSG | 8 | 3000 | 182.0 | 182.0 | 20.0 |
| BQ296106DSGT | WSON | DSG | 8 | 250 | 182.0 | 182.0 | 20.0 |
| BQ296107DSGR | WSON | DSG | 8 | 3000 | 182.0 | 182.0 | 20.0 |
| BQ296107DSGT | WSON | DSG | 8 | 250 | 182.0 | 182.0 | 20.0 |
| BQ296111DSGR | WSON | DSG | 8 | 3000 | 210.0 | 185.0 | 35.0 |
| BQ296111DSGT | WSON | DSG | 8 | 250 | 182.0 | 182.0 | 20.0 |
| BQ296112DSGR | WSON | DSG | 8 | 3000 | 210.0 | 185.0 | 35.0 |
| BQ296112DSGT | WSON | DSG | 8 | 250 | 210.0 | 185.0 | 35.0 |
| BQ296113DSGR | WSON | DSG | 8 | 3000 | 182.0 | 182.0 | 20.0 |
| BQ296113DSGT | WSON | DSG | 8 | 250 | 182.0 | 182.0 | 20.0 |
| BQ296114DSGR | WSON | DSG | 8 | 3000 | 182.0 | 182.0 | 20.0 |
| BQ296114DSGT | WSON | DSG | 8 | 250 | 182.0 | 182.0 | 20.0 |
| BQ296115DSGR | WSON | DSG | 8 | 3000 | 210.0 | 185.0 | 35.0 |
| BQ296202DSGR | WSON | DSG | 8 | 3000 | 182.0 | 182.0 | 20.0 |

| Device | Package Type | Package Drawing | Pins | SPQ | Length (mm) | Width (mm) | Height (mm) |
|---|---|---|---|---|---|---|---|
| BQ296202DSGT | WSON | DSG | 8 | 250 | 182.0 | 182.0 | 20.0 |
| BQ296203DSGR | WSON | DSG | 8 | 3000 | 182.0 | 182.0 | 20.0 |
| BQ296203DSGR | WSON | DSG | 8 | 3000 | 208.0 | 191.0 | 35.0 |
| BQ296203DSGT | WSON | DSG | 8 | 250 | 182.0 | 182.0 | 20.0 |
| BQ296212DSGR | WSON | DSG | 8 | 3000 | 210.0 | 185.0 | 35.0 |
| BQ296212DSGT | WSON | DSG | 8 | 250 | 210.0 | 185.0 | 35.0 |
| BQ296213DSGR | WSON | DSG | 8 | 3000 | 182.0 | 182.0 | 20.0 |
| BQ296213DSGT | WSON | DSG | 8 | 250 | 182.0 | 182.0 | 20.0 |
| BQ296215DSGR | WSON | DSG | 8 | 3000 | 210.0 | 185.0 | 35.0 |
| BQ296215DSGT | WSON | DSG | 8 | 250 | 210.0 | 185.0 | 35.0 |
| BQ296216DSGR | WSON | DSG | 8 | 3000 | 208.0 | 191.0 | 35.0 |
| BQ296216DSGT | WSON | DSG | 8 | 250 | 182.0 | 182.0 | 20.0 |
| BQ296217DSGR | WSON | DSG | 8 | 3000 | 182.0 | 182.0 | 20.0 |
| BQ296217DSGT | WSON | DSG | 8 | 250 | 182.0 | 182.0 | 20.0 |
| BQ296221DSGR | WSON | DSG | 8 | 3000 | 208.0 | 191.0 | 35.0 |
| BQ296221DSGT | WSON | DSG | 8 | 250 | 210.0 | 185.0 | 35.0 |
| BQ296222DSGR | WSON | DSG | 8 | 3000 | 208.0 | 191.0 | 35.0 |
| BQ296222DSGT | WSON | DSG | 8 | 250 | 210.0 | 185.0 | 35.0 |
| BQ296223DSGR | WSON | DSG | 8 | 3000 | 208.0 | 191.0 | 35.0 |
| BQ296223DSGT | WSON | DSG | 8 | 250 | 210.0 | 185.0 | 35.0 |
| BQ296224DSGR | WSON | DSG | 8 | 3000 | 210.0 | 185.0 | 35.0 |
| BQ296224DSGT | WSON | DSG | 8 | 250 | 210.0 | 185.0 | 35.0 |
| BQ296226DSGR | WSON | DSG | 8 | 3000 | 210.0 | 185.0 | 35.0 |
| BQ296226DSGT | WSON | DSG | 8 | 250 | 210.0 | 185.0 | 35.0 |
| BQ296227DSGR | WSON | DSG | 8 | 3000 | 210.0 | 185.0 | 35.0 |
| BQ296228DSGR | WSON | DSG | 8 | 3000 | 208.0 | 191.0 | 35.0 |
| BQ296228DSGT | WSON | DSG | 8 | 250 | 210.0 | 185.0 | 35.0 |
| BQ296229DSGR | WSON | DSG | 8 | 3000 | 208.0 | 191.0 | 35.0 |
| BQ296229DSGT | WSON | DSG | 8 | 250 | 210.0 | 185.0 | 35.0 |
| BQ296230DSGR | WSON | DSG | 8 | 3000 | 210.0 | 185.0 | 35.0 |
| BQ296230DSGT | WSON | DSG | 8 | 250 | 210.0 | 185.0 | 35.0 |
| BQ296231DSGR | WSON | DSG | 8 | 3000 | 208.0 | 191.0 | 35.0 |
| BQ296231DSGT | WSON | DSG | 8 | 250 | 210.0 | 185.0 | 35.0 |
| BQ296232DSGR | WSON | DSG | 8 | 3000 | 210.0 | 185.0 | 35.0 |
| BQ296232DSGT | WSON | DSG | 8 | 250 | 210.0 | 185.0 | 35.0 |
| BQ296233DSGR | WSON | DSG | 8 | 3000 | 210.0 | 185.0 | 35.0 |
| BQ296234DSGR | WSON | DSG | 8 | 3000 | 208.0 | 191.0 | 35.0 |
| BQ296235DSGR | WSON | DSG | 8 | 3000 | 210.0 | 185.0 | 35.0 |

# GENERIC PACKAGE VIEW

## DSG 8

## WSON - 0.8 mm max height

**2 x 2, 0.5 mm pitch**

PLASTIC SMALL OUTLINE - NO LEAD

This image is a representation of the package family, actual package may vary.
Refer to the product data sheet for package details.

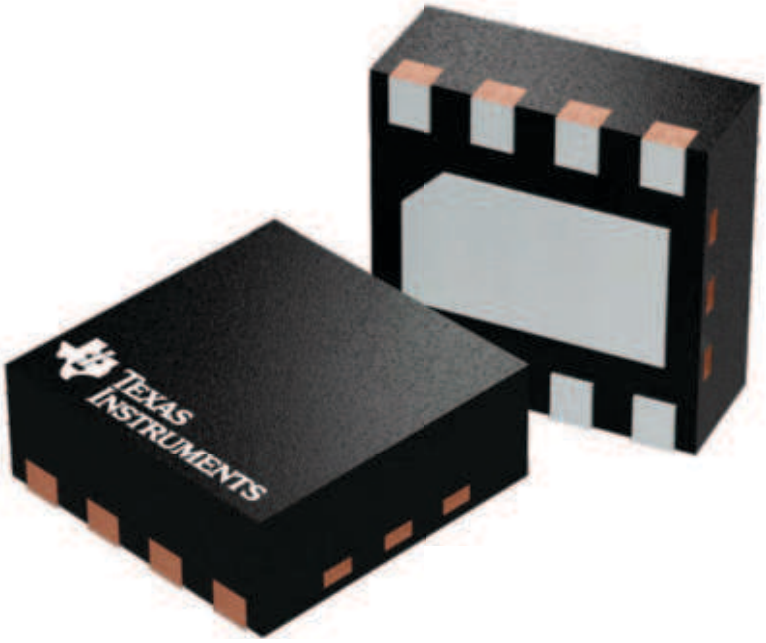


4224783/A

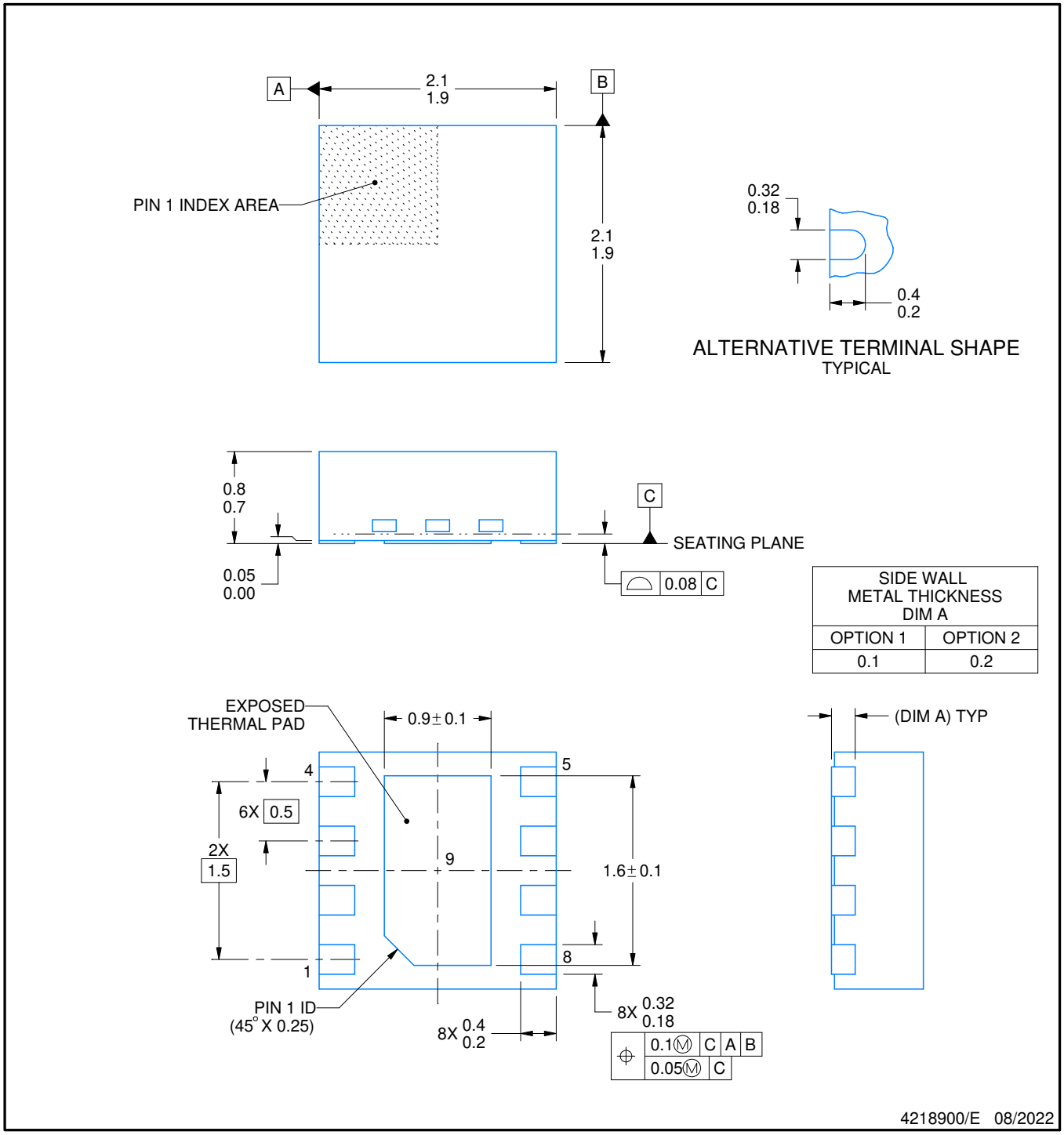


NOTES:

1. All linear dimensions are in millimeters. Any dimensions in parenthesis are for reference only. Dimensioning and tolerancing per ASME Y14.5M.
2. This drawing is subject to change without notice.
3. The package thermal pad must be soldered to the printed circuit board for thermal and mechanical performance.

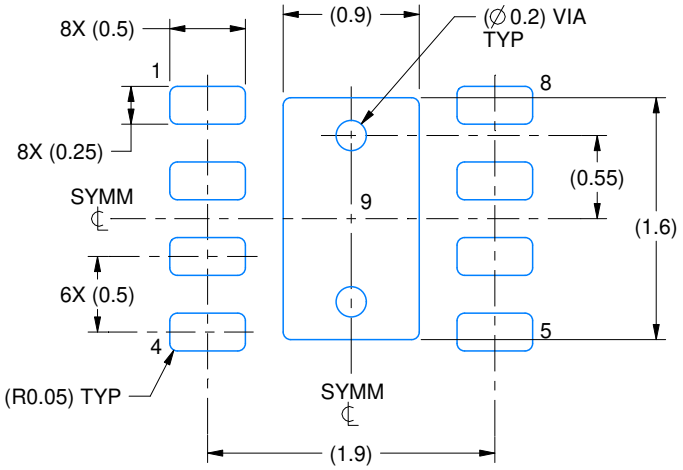


LAND PATTERN EXAMPLE
SCALE:20X

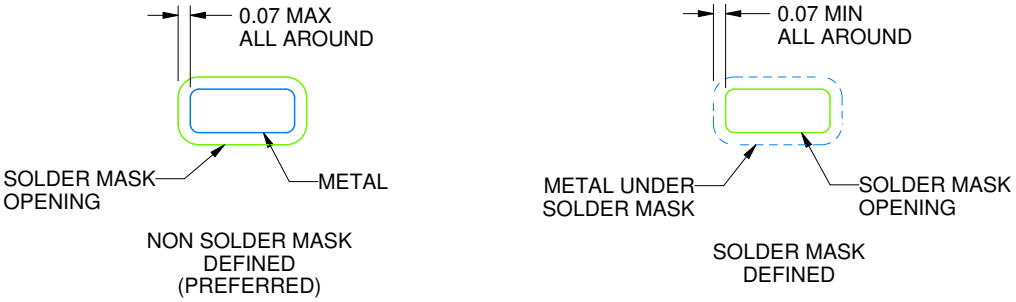


SOLDER MASK DETAILS

4218900/E 08/2022

NOTES: (continued)

4. This package is designed to be soldered to a thermal pad on the board. For more information, see Texas Instruments literature number SLUA271 (www.ti.com/lit/slua271).
5. Vias are optional depending on application, refer to device data sheet. If any vias are implemented, refer to their locations shown on this view. It is recommended that vias under paste be filled, plugged or tented.

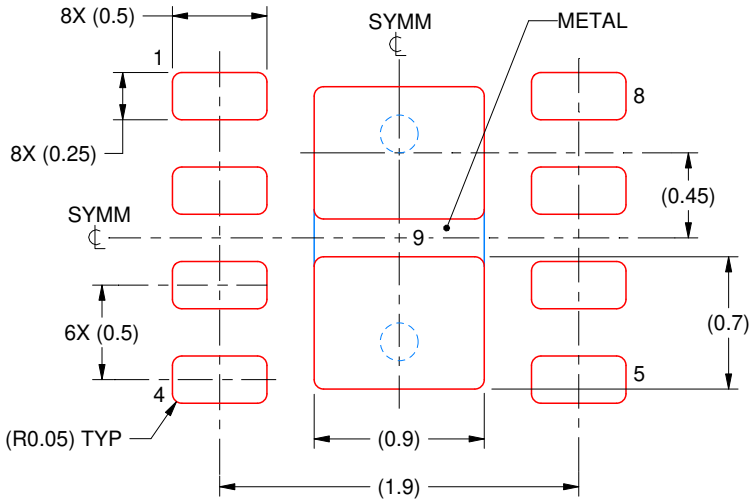


SOLDER PASTE EXAMPLE
BASED ON 0.125 mm THICK STENCIL

EXPOSED PAD 9:
87% PRINTED SOLDER COVERAGE BY AREA UNDER PACKAGE
SCALE:25X

4218900/E 08/2022

NOTES: (continued)

6. Laser cutting apertures with trapezoidal walls and rounded corners may offer better paste release. IPC-7525 may have alternate design recommendations.

# IMPORTANT NOTICE AND DISCLAIMER

TI PROVIDES TECHNICAL AND RELIABILITY DATA (INCLUDING DATASHEETS), DESIGN RESOURCES (INCLUDING REFERENCE DESIGNS), APPLICATION OR OTHER DESIGN ADVICE, WEB TOOLS, SAFETY INFORMATION, AND OTHER RESOURCES “AS IS” AND WITH ALL FAULTS, AND DISCLAIMS ALL WARRANTIES, EXPRESS AND IMPLIED, INCLUDING WITHOUT LIMITATION ANY IMPLIED WARRANTIES OF MERCHANTABILITY, FITNESS FOR A PARTICULAR PURPOSE OR NON-INFRINGEMENT OF THIRD PARTY INTELLECTUAL PROPERTY RIGHTS.

These resources are intended for skilled developers designing with TI products. You are solely responsible for (1) selecting the appropriate TI products for your application, (2) designing, validating and testing your application, and (3) ensuring your application meets applicable standards, and any other safety, security, regulatory or other requirements.

These resources are subject to change without notice. TI grants you permission to use these resources only for development of an application that uses the TI products described in the resource. Other reproduction and display of these resources is prohibited. No license is granted to any other TI intellectual property right or to any third party intellectual property right. TI disclaims responsibility for, and you fully indemnify TI and its representatives against any claims, damages, costs, losses, and liabilities arising out of your use of these resources.

TI’s products are provided subject to TI’s Terms of Sale, TI’s General Quality Guidelines, or other applicable terms available either on ti.com or provided in conjunction with such TI products. TI’s provision of these resources does not expand or otherwise alter TI’s applicable warranties or warranty disclaimers for TI products. Unless TI explicitly designates a product as custom or customer-specified, TI products are standard, catalog, general purpose devices.

TI objects to and rejects any additional or different terms you may propose.

Copyright © 2026, Texas Instruments Incorporated

Last updated 10/2025