bq3055 CEDV Gas Gauge and Battery Pack Manager for 2-Series, 3-Series, and 4-Series Li-Ion Batteries

1 Features

- Fully Integrated 2-Series, 3-Series, and 4-Series Li-Ion or Li-Polymer Cell Battery Pack Manager and Protection
- Advanced Compensated End-of-Discharge Voltage (CEDV) Gauging
- High-Side N-CH Protection FET Drive
- Integrated Cell Balancing
- Low-Power Modes
  - Low Power: < 180 µA
  - Sleep < 76 µA
- Full Array of Programmable Protection Features
  - Voltage
  - Current
  - Temperature
- Sophisticated Charge Algorithms
  - JEITA
  - Enhanced Charging
  - Adaptive Charging
- Supports Two-Wire SMBus v1.1 Interface
- SHA-1 Authentication
- Compact Package: 30-Lead TSSOP

2 Applications

- Notebook and Netbook PCs
- Medical and Test Equipment
- Portable Instrumentation

3 Description

The bq3055 device is a fully integrated, single-chip, pack-based solution that provides a rich array of features for gas gauging, protection, and authentication for 2-series, 3-series, and 4-series cell Li-Ion and Li-Polymer battery packs.

Using its integrated high-performance analog peripherals, the bq3055 device measures and maintains an accurate record of available capacity, voltage, current, temperature, and other critical parameters in Li-Ion or Li-Polymer batteries, and reports this information to the system host controller over an SMBus v1.1 compatible interface.

The bq3055 provides software-based 1st-level and 2nd-level safety protection for overvoltage, undervoltage, overtemperature, and overcharge conditions, as well as hardware-based protection for overcurrent in discharge and short circuit in charge and discharge conditions.

SHA-1 authentication with secure memory for authentication keys enables identification of genuine battery packs beyond any doubt.

The compact 30-lead TSSOP package minimizes solution cost and size for smart batteries while providing maximum functionality and safety for battery gauging applications.

Device Information(1)

PART NUMBER	PACKAGE	BODY SIZE (NOM)
bq3055	TSSOP (30)	7.80 mm × 4.40 mm

(1) For all available packages, see the orderable addendum at the end of the data sheet.

Simplified Schematic

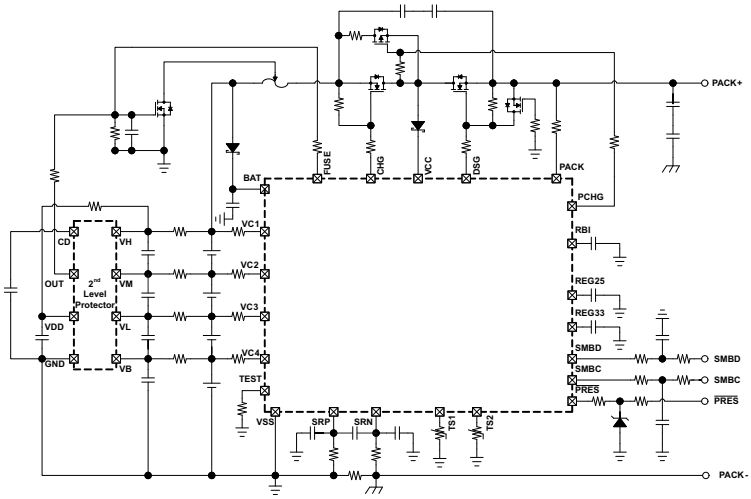

An IMPORTANT NOTICE at the end of this data sheet addresses availability, warranty, changes, use in safety-critical applications, intellectual property matters and other important disclaimers. PRODUCTION DATA.

Table of Contents

1 **Features** ... 1
2 **Applications** ... 1
3 **Description** ... 1
4 **Revision History** ... 2
5 **Pin Configuration and Functions** ... 3
6 **Specifications** ... 4
6.1 Absolute Maximum Ratings ... 4
6.2 ESD Ratings ... 5
6.3 Recommended Operating Conditions ... 5
6.4 Thermal Information ... 5
6.5 Electrical Characteristics: Supply Current ... 5
6.6 Power-On Reset (POR) ... 6
6.7 Wake From Sleep ... 6
6.8 RBI RAM Backup ... 6
6.9 3.3-V Regulator ... 6
6.10 2.5-V Regulator ... 7
6.11 $\overline{\text{PRES}}$, SMBD, SMBC ... 7
6.12 CHG, DSG FET Drive ... 7
6.13 PCHG FET Drive ... 8
6.14 FUSE ... 8
6.15 Coulomb Counter ... 8
6.16 VC1, VC2, VC3, VC4 ... 8
6.17 TS1, TS2 ... 9
6.18 Internal Temperature Sensor ... 9
6.19 Internal Thermal Shutdown ... 9
6.20 High-Frequency Oscillator ... 9
6.21 Low-Frequency Oscillator ... 10
6.22 Internal Voltage Reference ... 10
6.23 Flash ... 10
6.24 OCD Current Protection ... 10
6.25 SCD1 Current Protection ... 11
6.26 SCD2 Current Protection ... 11
6.27 SCC Current Protection ... 11
6.28 SBS Timing Requirements ... 12
6.29 Typical Characteristics ... 13
7 **Parameter Measurement Information** ... 14
7.1 Battery Parameter Measurements ... 14
8 **Detailed Description** ... 15
8.1 Overview ... 15
8.2 Functional Block Diagram ... 17
8.3 Feature Description ... 17
8.4 Device Functional Modes ... 18
9 **Application and Implementation** ... 19
9.1 Application Information ... 19
9.2 Typical Application ... 19
9.3 System Example ... 30
10 **Power Supply Recommendations** ... 31
11 **Layout** ... 31
11.1 Layout Guidelines ... 31
11.2 Layout Example ... 31
12 **Device and Documentation Support** ... 32
12.1 Documentation Support ... 32
12.2 Community Resources ... 32
12.3 Trademarks ... 32
12.4 Glossary ... 32
13 **Mechanical, Packaging, and Orderable Information** ... 32

4 Revision History

NOTE: Page numbers for previous revisions may differ from page numbers in the current version.

Changes from Revision B (October 2013) to Revision C	Page
• Added *ESD Ratings* table, *Feature Description* section, *Device Functional Modes*, *Application and Implementation* section, *Power Supply Recommendations* section, *Layout* section, *Device and Documentation Support* section, *Community Resources* section, and *Mechanical, Packaging, and Orderable Information* section	1
• Changed SRP, SRN absolute maximum values	4

Changes from Revision A (June 2011) to Revision B	Page
• Changed Electrical Characteristic for I_{CC} Shutdown	5

Copyright © 2010–2015, Texas Instruments Incorporated

5 Pin Configuration and Functions

DBT Package
30-Pin TSSOP
Top View

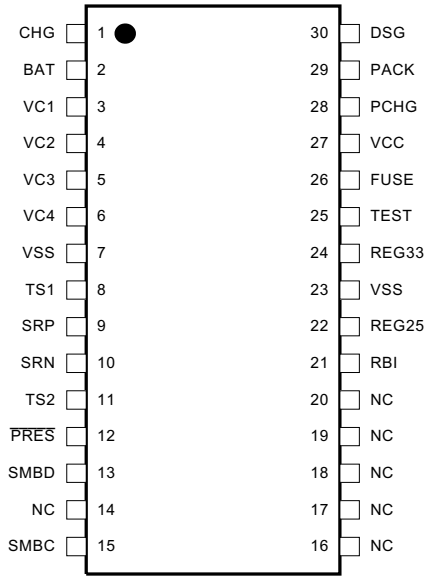

Pin Functions

PIN		TYPE(1)	DESCRIPTION
NAME	NO.		
BAT	2	P	Alternate power source
CHG	1	O	Charge N-FET gate drive
DSG	30	O	Discharge N-FET gate drive
FUSE	26	O	Fuse drive
NC	14	—	Not internally connected. Connect to VSS.
NC	16	—	Not internally connected. Connect to VSS.
NC	17	—	Not internally connected. Connect to VSS.
NC	18	—	Not internally connected. Connect to VSS.
NC	19	—	Not internally connected. Connect to VSS.
NC	20	—	Not internally connected. Connect to VSS.
PACK	29	P	Alternate power source
PCHG	28	I/OD	Precharge P-FET gate drive
$\overline{\text{PRES}}$	12	I	Host system present input
RBI	21	P	RAM backup
REG25	22	P	2.5-V regulator output
REG33	24	P	3.3-V regulator output
SMBC	15	I/OD	SMBus v1.1 clock line
SMBD	13	I/OD	SMBus v1.1 data line
SRN	10	AI	Differential Coulomb Counter input
SRP	9	AI	Differential Coulomb Counter input
TEST	25	—	Test pin, connect to VSS through 2-kΩ resistor.
TS1	8	AI	Temperature sensor 1 thermistor input
TS2	11	AI	Temperature sensor 2 thermistor input

(1) P = Power Connection, O = Digital Output, AI = Analog Input, I = Digital Input, I/OD = Digital Input/Output

Copyright © 2010–2015, Texas Instruments Incorporated

Pin Functions (continued)

PIN		TYPE(1)	DESCRIPTION
NAME	NO.		
VC1	3	I	Sense input for positive voltage of top most cell in stack and cell balancing input for top most cell in stack
VC2	4	I	Sense input for positive voltage of third lowest cell in stack and cell balancing input for third lowest cell in stack
VC3	5	I	Sense input for positive voltage of second lowest cell in stack and cell balancing input for second lowest cell in stack
VC4	6	I	Sense input for positive voltage of lowest cell in stack and cell balancing input for lowest cell in stack
VCC	27	P	Power supply voltage
VSS	7	P	Device ground
VSS	23	P	Device ground

6 Specifications

6.1 Absolute Maximum Ratings

Over operating free-air temperature range (unless otherwise noted)(1)

		MIN	MAX	UNIT
Supply voltage, V_{MAX}	VCC, TEST, PACK w.r.t. V_{SS}	–0.3	34	V
Input voltage, V_{IN}	VC1, BAT	V_{VC2} – 0.3	V_{VC2} + 8.5 V or 34 V, whichever is lower	V
	VC2	V_{VC3} – 0.3	V_{VC3} + 8.5 V	
	VC3	V_{VC4} – 0.3	V_{VC4} + 8.5 V	
	VC4	V_{SRP} – 0.3	V_{SRP} + 8.5 V	
	SRP, SRN	–0.5	0.5	
	SMBC, SMBD	V_{SS} – 0.3	6.0	
	TS1, TS2, $\overline{PRES}$	–0.3 V	V_{REG25} + 0.3 V	
Output voltage, V_O	DSG	–0.3	V_{PACK} + 20 V or V_{SS} + 34 V, whichever is lower	V
	CHG	–0.3	V_{BAT} + 20 V or V_{SS} + 34 V, whichever is lower	
	FUSE	–0.3	34	
	RBI, REG25	–0.3	2.75	
	REG33	–0.3	5.0	
Maximum VSS current, I_{SS}		50		mA
Current for cell balancing, I_{CB}			10	
Functional Temperature, T_{FUNC}		–40	110	°C
Lead temperature (soldering, 10 s), T_{SOLDER}			300	°C
Storage temperature, T_{stg}		–65	150	°C

(1) Stresses beyond those listed under *Absolute Maximum Ratings* may cause permanent damage to the device. These are stress ratings only, which do not imply functional operation of the device at these or any other conditions beyond those indicated under *Recommended Operating Conditions*. Exposure to absolute–maximum–rated conditions for extended periods may affect device reliability.

Copyright © 2010–2015, Texas Instruments Incorporated

6.2 ESD Ratings

				VALUE	UNIT
$V_{(ESD)}$	Electrostatic discharge	Human body model (HBM), per ANSI/ESDA/JEDEC JS-001 (1)	All pins except pins 3 to 6	±2000	V
			Pins 3 to 6	±1000	
		Charged device model (CDM), per JEDEC specification JESD22-C101 (2)		±500	

(1) JEDEC document JEP155 states that 500-V HBM allows safe manufacturing with a standard ESD control process.
(2) JEDEC document JEP157 states that 250-V CDM allows safe manufacturing with a standard ESD control process.

6.3 Recommended Operating Conditions

Typical values stated where TA = 25ºC and VCC = 14.4 V, Min/Max values stated where T_A= –40ºC to 85ºC and VCC = 3.8 V to 25 V (unless otherwise noted)

			MIN	NOM	MAX	UNIT
Supply voltage		VCC, PACK			25	V
		BAT	3.8		V_{VC2} + 5	
$V_{STARTUP}$		Start up voltage at PACK	3		5.5	V
V_{IN}	Input voltage range	VC1, BAT	V_{VC2}		V_{VC2} + 5	V
		VC2	V_{VC3}		V_{VC3} + 5	
		VC3	V_{VC4}		V_{VC4} + 5	
		VC4	V_{SRP}		V_{SRP} + 5	
		VCn – VC(n+1), (n=1, 2, 3, 4)	0		5	
		PACK			25	
		SRP to SRN	–0.2		0.2	
C_{REG33}	External 3.3-V REG capacitor		1			µF
C_{REG25}	External 2.5-V REG capacitor		1			µF
T_{OPR}	Operating temperature		–40		85	°C

6.4 Thermal Information

THERMAL METRIC (1)		bq3055 TSSOP (DBT) 30 PINS	UNIT
$R_{\theta JA}$	Junction-to-ambient thermal resistance	73.1	°C/W
$R_{\theta JC(top)}$	Junction-to-case(top) thermal resistance	17.5	°C/W
$R_{\theta JB}$	Junction-to-board thermal resistance	34.5	°C/W
ψ_{JT}	Junction-to-top characterization parameter	0.3	°C/W
ψ_{JB}	Junction-to-board characterization parameter	30.3	°C/W
$R_{\theta JC(bot)}$	Junction-to-case(bottom) thermal resistance	n/a	°C/W

(1) For more information about traditional and new thermal metrics, see the *Semiconductor and IC Package Thermal Metrics* application report, SPRA953.

6.5 Electrical Characteristics: Supply Current

Typical values stated where TA = 25ºC and VCC = 14.4 V, Min/Max values stated where T_A= –40ºC to 85ºC and VCC = 3.8 V to 25 V (unless otherwise noted)

PARAMETER		TEST CONDITIONS	MIN	TYP	MAX	UNIT
I_{CC}	Normal	CHG on, DSG on, no Flash write		410		µA
	Sleep	CHG on, DSG on, no SBS communication		160		
		CHG off, DSG off, no SBS communication		80		
	Shutdown				3.7	

Copyright © 2010–2015, Texas Instruments Incorporated

6.6 Power-On Reset (POR)

Typical values stated where TA = 25ºC and VCC = 14.4 V, Min/Max values stated where T_A= –40ºC to 85ºC and VCC = 3.8 V to 25 V (unless otherwise noted)

PARAMETER		TEST CONDITIONS	MIN	TYP	MAX	UNIT
V_{IT-}	Negative-going voltage input	At REG25	1.9	2	2.1	V
V_{HYS}	POR Hysteresis	At REG25	65	125	165	mV

6.7 Wake From Sleep

Typical values stated where TA = 25ºC and VCC = 14.4 V, Min/Max values stated where T_A= –40ºC to 85ºC and VCC = 3.8 V to 25 V (unless otherwise noted)

PARAMETER		TEST CONDITIONS	MIN	TYP	MAX	UNIT
V_{WAKE}	V_{WAKE} Threshold	V_{WAKE}	0.2	1.2	2	mV
		V_{WAKE}	0.4	2.4	3.6	
		V_{WAKE}	2	5	6.8	
		V_{WAKE}	5.3	10	13	
V_{WAKE_TCO}	Temperature drift of VWAKE accuracy			0.5%		°C
t_{WAKE}	Time from application of current and wake of bq3055			0.2	1	ms

6.8 RBI RAM Backup

Typical values stated where TA = 25ºC and VCC = 14.4 V, Min/Max values stated where T_A= –40ºC to 85ºC and VCC = 3.8 V to 25 V (unless otherwise noted)

PARAMETER		TEST CONDITIONS	MIN	TYP	MAX	UNIT
$I_{(RBI)}$	RBI data-retention input current	VRBI > $V_{(RBI)MIN}$, VCC < VIT		20	1100	nA
		VRBI > $V_{(RBI)MIN}$, VCC < VIT, T_A= 0°C to 70°C			500	
$V_{(RBI)}$	RBI data-retention voltage		1			V

6.9 3.3-V Regulator

Typical values stated where TA = 25ºC and VCC = 14.4 V, Min/Max values stated where T_A= –40ºC to 85ºC and VCC = 3.8 V to 25 V (unless otherwise noted)

PARAMETER		TEST CONDITIONS	MIN	TYP	MAX	UNIT
V_{REG33}	Regulator output voltage	3.8 V < VCC or BAT ≤ 5 V, I_{CC} ≤4 mA	2.4		3.5	V
		5V < VCC or BAT ≤ 6.8 V, I_{CC} ≤13 mA	3.1	3.3	3.5	
		6.8 V < VCC or BAT ≤ 20 V, I_{CC} ≤ 30 mA	3.1	3.3	3.5	
I_{REG33}	Regulator output current		2			mA
$\Delta V_{(VDDTEMP)}$	Regulator output change with temperature	VCC or BAT = 14.4 V, I_{REG33} = 2 mA		0.2%		
$\Delta V_{(VDDLINE)}$	Line regulation	VCC or BAT = 14.4 V, I_{REG33} = 2 mA		1	13	mV
$\Delta V_{(VDDLOAD)}$	Load regulation	VCC or BAT = 14.4 V, I_{REG33} = 2 mA		5	18	mV
$I_{(REG33MAX)}$	Current limit	VCC or BAT = 14.4 V, V_{REG33} = 3 V			70	mA
		VCC or BAT = 14.4 V, V_{REG33} = 0 V			33	

Copyright © 2010–2015, Texas Instruments Incorporated

6.10 2.5-V Regulator

Typical values stated where TA = 25ºC and VCC = 14.4 V, Min/Max values stated where T_A= –40ºC to 85ºC and VCC = 3.8 V to 25 V (unless otherwise noted)

PARAMETER		TEST CONDITIONS	MIN	TYP	MAX	UNIT
V_{REG25}	Regulator output voltage	I_{REG25} = 10 mA	2.35	2.5	2.55	V
I_{REG25}	Regulator output current		3			mA
$\Delta V_{(VDDTEMP)}$	Regulator output change with temperature	VCC or BAT = 14.4 V, I_{REG25} = 2 mA		0.25%		
$\Delta V_{(VDDLINE)}$	Line regulation	VCC or BAT = 14.4 V, I_{REG25} = 2 mA		1	4	mV
$\Delta V_{(VDDLOAD)}$	Load regulation	VCC or BAT = 14.4 V, I_{REG25} = 2 mA		20	40	mV
$I_{(REG33MAX)}$	Current limit	VCC or BAT = 14.4 V, V_{REG25} = 2.3 V			65	mA
		VCC or BAT = 14.4 V, V_{REG25} = 0 V			23	

6.11 $\overline{\text{PRES}}$, SMBD, SMBC

Typical values stated where TA = 25ºC and VCC = 14.4 V, Min/Max values stated where T_A= –40ºC to 85ºC and VCC = 3.8 V to 25 V (unless otherwise noted)

PARAMETER		TEST CONDITIONS	MIN	TYP	MAX	UNIT
V_{IH}	High-level input	$\overline{\text{PRES}}$, SMBD, SMBC	2.0			V
V_{IL}	Low-level input	$\overline{\text{PRES}}$, SMBD, SMBC			0.8	V
V_{OL}	Low-level output voltage	SMBD, SMBC			0.4	V
C_{IN}	Input capacitance	$\overline{\text{PRES}}$, SMBD, SMBC		5		pF
I_{LKG}	Input leakage current	$\overline{\text{PRES}}$, SMBD, SMBC			1	µA
I_{WPU}	Weak pullup current	$\overline{\text{PRES}}$, V_{OH} = V_{REG25} – 0.5 V	60		120	µA
$R_{PD(SMBx)}$	SMBC, SMBD pulldown	T_A = –40 to 100˚C	550	775	1000	kΩ

6.12 CHG, DSG FET Drive

Typical values stated where TA = 25ºC and VCC = 14.4 V, Min/Max values stated where T_A= –40ºC to 85ºC and VCC = 3.8 V to 25 V (unless otherwise noted)

PARAMETER		TEST CONDITIONS	MIN	TYP	MAX	UNIT
$V_{(FETON)}$	Output voltage, charge, and discharge FETs on	$V_{O(FETONDSG)}$ = $V_{(DSG)}$ – V_{PACK}, V_{GS} connect 10 MΩ, VCC 3.8 V to 8.4 V	8	9.7	12	V
		$V_{O(FETONDSG)}$ = $V_{(DSG)}$ – V_{PACK}, V_{GS} connect 10 MΩ, VCC > 8.4 V	9	11	12	
		$V_{O(FETONCHG)}$ = $V_{(CHG)}$ – V_{BAT}, V_{GS} connect 10 MΩ, VCC 3.8 V to 8.4 V	8	9.7	12	
		$V_{O(FETONCHG)}$ = $V_{(CHG)}$ – V_{BAT}, V_{GS} connect 10 MΩ, VCC > 8.4 V	9	11	12	
$V_{(FETOFF)}$	Output voltage, charge and discharge FETs off	$VO_{(FETOFFDSG)}$ = $V_{(DSG)}$ – V_{PACK}	–0.4		0.4	V
		$V_{O(FETOFFCHG)}$ = $V_{(CHG)}$ – V_{BAT}	–0.4		0.4	
t_r	Rise time	C_L= 4700 pF R_G= 5.1 kΩ VCC < 8.4 V_{DSG}: V_{BAT} to V_{BAT} + 4 V V_{CHG}: V_{PACK} to V_{PACK} + 4 V		800	1400	µs
		C_L = 4700 pF R_G = 5.1 kΩ VCC > 8.4 V_{DSG}: V_{BAT} to V_{BAT} + 4 V V_{CHG}: V_{PACK} to V_{PACK} + 4 V		200	500	
t_f	Fall time	C_L = 4700 pF R_G = 5.1 kΩ V_{DSG}: V_{BAT} + $V_{O(FETONDSG)}$ to V_{BAT} + 1 V V_{CHG}: V_{PACK} + $V_{O(FETONCHG)}$ to V_{PACK} + 1 V		80	200	µs

Copyright © 2010–2015, Texas Instruments Incorporated

6.13 PCHG FET Drive

Typical values stated where TA = 25ºC and VCC = 14.4 V, Min/Max values stated where T_A= –40ºC to 85ºC and VCC = 3.8 V to 25 V (unless otherwise noted)

PARAMETER		TEST CONDITIONS	MIN	TYP	MAX	UNIT
V_{PU_PCHG}	PCHG pullup voltage				V_{CC}	V
V_{OL_PCHG}	PCHG output voltage low	I_{OL} = 1 mA	0.3			V

6.14 FUSE

Typical values stated where TA = 25ºC and VCC = 14.4 V, Min/Max values stated where T_A= –40ºC to 85ºC and VCC = 3.8 V to 25 V (unless otherwise noted)

PARAMETER		TEST CONDITIONS	MIN	TYP	MAX	UNIT
$V_{OH(FUSE)}$	High-level FUSE output	VCC = 3.8 V to 9 V	2.4		8.5	V
		VCC = 9 V to 25 V	7	8	9	
$V_{IH(FUSE)}$	Weak pullup current in off state(1)		2.8			V
				100		nA
$t_{R(FUSE)}$	FUSE output rise time	C_L = 1 nF, VCC = 9 V to 25 V, $V_{OH(FUSE)}$ = 0 V to 5 V		5	20	µs
$Z_{O(FUSE)}$	FUSE output impedance			2	5	kΩ

(1) Verified by design. Not production tested.

6.15 Coulomb Counter

Typical values stated where TA = 25ºC and VCC = 14.4 V, Min/Max values stated where T_A= –40ºC to 85ºC and VCC = 3.8 V to 25 V (unless otherwise noted)

PARAMETER	TEST CONDITIONS	MIN	TYP	MAX	UNIT
Input voltage range	SRP – SRN	–0.20		0.25	V
Conversion time	Single conversion		250		ms
Resolution (no missing codes)		16			Bits
Effective resolution	Single conversion, signed	15			Bits
Offset error	Post calibrated		10		µV
Offset error drift			0.3	0.5	µV/°C
Full-scale error		–0.8%	0.2%	0.8%	
Full-scale error drift				150	PPM/°C
Effective input resistance		2.5			mΩ

6.16 VC1, VC2, VC3, VC4

Typical values stated where TA = 25ºC and VCC = 14.4 V, Min/Max values stated where T_A= –40ºC to 85ºC and VCC = 3.8 V to 25 V (unless otherwise noted)

PARAMETER		TEST CONDITIONS	MIN	TYP	MAX	UNIT
V_{IN}	Input voltage range	VC4 – VC3, VC3 – VC2, VC2 – VC1, VC1 – VSS	–0.20		8	V
	Conversion time	Single conversion		32		ms
	Resolution (no missing codes)		16			Bits
	Effective resolution	Single conversion, signed	15			Bits
$R_{(BAL)}$	$R_{DS(ON)}$ for internal FET at V_{DS} > 2 V	V_{DS} = VC4 – VC3, VC3 – VC2, VC2 – VC1, VC1 – VSS	200	310	430	Ω
	$R_{DS(ON)}$ for internal FET at V_{DS} > 4 V	V_{DS} = VC4 – VC3, VC3 – VC2, VC2 – VC1, VC1 – VSS	60	125	230	

Copyright © 2010–2015, Texas Instruments Incorporated

6.17 TS1, TS2

Typical values stated where TA = 25ºC and VCC = 14.4 V, Min/Max values stated where T_A= –40ºC to 85ºC and VCC = 3.8 V to 25 V (unless otherwise noted)

PARAMETER		TEST CONDITIONS	MIN	TYP	MAX	UNIT
R	Internal pullup resistor		16.5	17.5	19	KΩ
R_{DRIFT}	Internal pullup resistor drift from 25°C				200	PPM/°C
R_{PAD}	Internal pin pad resistance			84		Ω
V_{IN}	Input voltage range	TS1 – VSS, TS2 – VSS	–0.20		0.8 × V_{REG25}	V
	Conversion time			16		ms
	Resolution (no missing codes)		16			Bits
	Effective resolution		11	12		Bits

6.18 Internal Temperature Sensor

Typical values stated where TA = 25ºC and VCC = 14.4 V, Min/Max values stated where T_A= –40ºC to 85ºC and VCC = 3.8 V to 25 V (unless otherwise noted)

PARAMETER		TEST CONDITIONS	MIN	TYP	MAX	UNIT
$V_{(TEMP)}$	Temperature sensor voltage		–1.9	–2	–2.1	mV/°C
	Conversion time			16		ms
	Resolution (no missing codes)		16			Bits
	Effective resolution		11	12		Bits

6.19 Internal Thermal Shutdown

Typical values stated where TA = 25ºC and VCC = 14.4 V, Min/Max values stated where T_A= –40ºC to 85ºC and VCC = 3.8 V to 25 V (unless otherwise noted)

PARAMETER		TEST CONDITIONS	MIN	TYP	MAX	UNIT
T_{MAX2}	Maximum REG33 temperature		125		175	°C
$T_{RECOVER}$	Recovery hysteresis temperature			10		°C
$t_{PROTECT}$	Protection time			5		µs

6.20 High-Frequency Oscillator

Typical values stated where TA = 25ºC and VCC = 14.4 V, Min/Max values stated where T_A= –40ºC to 85ºC and VCC = 3.8 V to 25 V (unless otherwise noted)

PARAMETER		TEST CONDITIONS	MIN	TYP	MAX	UNIT
$f_{(OSC)}$	Operating frequency of CPU Clock			4.194		MHz
$f_{(EIO)}$	Frequency error (1) (2)	T_A = –20°C to 70°C	–2%	±0.25%	2%	
		T_A = –40°C to 85°C	–3%	±0.25%	3%	
$t_{(SXO)}$	Start-up time (3)	T_A = –25°C to 85°C		3	6	ms

(1) The frequency error is measured from 4.194 MHz.
(2) The frequency drift is included and measured from the trimmed frequency at V_{REG25} = 2.5 V, T_A = 25°C.
(3) The start-up time is defined as the time it takes for the oscillator output frequency to be ±3% when the device is already powered.

Copyright © 2010–2015, Texas Instruments Incorporated

6.21 Low-Frequency Oscillator

Typical values stated where TA = 25ºC and VCC = 14.4 V, Min/Max values stated where T_A= –40ºC to 85ºC and VCC = 3.8 V to 25 V (unless otherwise noted)

PARAMETER		TEST CONDITIONS	MIN	TYP	MAX	UNIT
$f_{(LOSC)}$	Operating frequency			32.768		kHz
$f_{(LEIO)}$	Frequency error (1) (2)	T_A = –20°C to 70°C	–1.5%	±0.25%	1.5%	
		T_A = –40°C to 85°C	–2.5%	±0.25%	2.5%	
$t_{(LSXO)}$	Start-up time (3)	T_A = –25°C to 85°C			100	µs

(1) The frequency drift is included and measured from the trimmed frequency at VCC = 2.5 V, T_A = 25°C.
(2) The frequency error is measured from 32.768 kHz.
(3) The start-up time is defined as the time it takes for the oscillator output frequency to be ±3%.

6.22 Internal Voltage Reference

Typical values stated where TA = 25ºC and VCC = 14.4 V, Min/Max values stated where T_A= –40ºC to 85ºC and VCC = 3.8 V to 25 V (unless otherwise noted)

PARAMETER		TEST CONDITIONS	MIN	TYP	MAX	UNIT
V_{REF}	Internal reference voltage		1.215	1.225	1.230	V
V_{REF_DRIFT}	Internal reference voltage drift	T_A = –25°C to 85°C		±80		PPM/°C
		T_A = 0°C to 60°C		±50		

6.23 Flash

Typical values stated where TA = 25ºC and VCC = 14.4 V, Min/Max values stated where T_A= –40ºC to 85ºC and VCC = 3.8 V to 25 V (unless otherwise noted)

PARAMETER (1)		TEST CONDITIONS	MIN	TYP	MAX	UNIT
	Data retention		10			Year
	Flash programming write-cycles	Data Flash	20k			Cycle
		Instruction Flash	1k			
$I_{CC(PROG_DF)}$	Data Flash-write supply current	T_A = –40°C to 85°C		3	4	mA
$I_{CC(ERASE_DF)}$	Data Flash-erase supply current	T_A = –40°C to 85°C		3	18	mA

(1) Verified by design. Not production tested.

6.24 OCD Current Protection

Typical values stated where TA = 25ºC and VCC = 14.4 V, Min/Max values stated where T_A= –40ºC to 85ºC and VCC = 3.8 V to 25 V (unless otherwise noted)

PARAMETER		TEST CONDITIONS	MIN	TYP	MAX	UNIT
$V_{(OCD)}$	OCD detection threshold voltage range, typical	RSNS = 0	50		200	mV
		RSNS = 1	25		100	
$\Delta V_{(OCDT)}$	OCD detection threshold voltage program step	RSNS = 0		10		mV
		RSNS = 1		5		
$V_{(OFFSET)}$	OCD offset		–10		10	mV
$V_{(Scale_Err)}$	OCD scale error		–10%		10%	
$t_{(OCDD)}$	Overcurrent in discharge delay		1		31	ms
$t_{(OCDD_STEP)}$	OCDD step options			2		ms
$t_{(DETECT)}$	Current fault detect time	VSRP – SRN = VTHRESH + 12.5 mV			160	µs
t_{ACC}	Overcurrent and short-circuit delay time accuracy	Accuracy of typical delay time	–20%		20%	

Copyright © 2010–2015, Texas Instruments Incorporated

6.25 SCD1 Current Protection

Typical values stated where TA = 25ºC and VCC = 14.4 V, Min/Max values stated where T_A= –40ºC to 85ºC and VCC = 3.8 V to 25 V (unless otherwise noted)

PARAMETER		TEST CONDITIONS	MIN	TYP	MAX	UNIT
$V_{(SDC1)}$	SCD1 detection threshold voltage range, typical	RSNS = 0	100		450	mV
		RSNS = 1	50		225	
$\Delta V_{(SCD1T)}$	SCD1 detection threshold voltage program step	RSNS = 0		50		mV
		RSNS = 1		25		
$V_{(OFFSET)}$	SCD1 offset		–10		10	mV
$V_{(Scale_Err)}$	SCD1 scale error		–10%		10%	
$t_{(SCD1D)}$	Short-circuit in discharge delay	AFE.STATE_CNTL[SCDDx2] = 0	0		915	µs
		AFE.STATE_CNTL[SCDDx2] = 1	0		1830	
$t_{(SCD1D_STEP)}$	SCD1D step options	AFE.STATE_CNTL[SCDDx2] = 0		61		µs
		AFE.STATE_CNTL[SCDDx2] = 1		122		
$t_{(DETECT)}$	Current fault detect time	VSRP – SRN = VTHRESH + 12.5 mV			160	µs
t_{ACC}	Overcurrent and short-circuit delay time accuracy	Accuracy of typical delay time	–20%		20%	

6.26 SCD2 Current Protection

Typical values stated where TA = 25ºC and VCC = 14.4 V, Min/Max values stated where T_A= –40ºC to 85ºC and VCC = 3.8 V to 25 V (unless otherwise noted)

PARAMETER		TEST CONDITIONS	MIN	TYP	MAX	UNIT
$V_{(SDC2)}$	SCD2 detection threshold voltage range, typical	RSNS = 0	100		450	mV
		RSNS = 1	50		225	
$\Delta V_{(SCD2T)}$	SCD2 detection threshold voltage program step	RSNS = 0		50		mV
		RSNS = 1		25		
$V_{(OFFSET)}$	SCD2 offset		–10		10	mV
$V_{(Scale_Err)}$	SCD2 scale error		–10%		10%	
$t_{(SCD1D)}$	Short-circuit in discharge delay	AFE.STATE_CNTL[SCDDx2] = 0	0		458	µs
		AFE.STATE_CNTL[SCDDx2] = 1	0		915	
$t_{(SCD2D_STEP)}$	SCD2D step options	AFE.STATE_CNTL[SCDDx2] = 0		30.5		µs
		AFE.STATE_CNTL[SCDDx2] = 1		61		
$t_{(DETECT)}$	Current fault detect time	VSRP – SRN = VTHRESH + 12.5 mV			160	µs
t_{ACC}	Overcurrent and short-circuit delay time accuracy	Accuracy of typical delay time	–20%		20%	

6.27 SCC Current Protection

Typical values stated where TA = 25ºC and VCC = 14.4 V, Min/Max values stated where T_A= –40ºC to 85ºC and VCC = 3.8 V to 25 V (unless otherwise noted)

PARAMETER		TEST CONDITIONS	MIN	TYP	MAX	UNIT
$V_{(SCCT)}$	SCC detection threshold voltage range, typical	RSNS = 0	–100		–300	mV
		RSNS = 1	–50		–225	
$\Delta V_{(SCCDT)}$	SCC detection threshold voltage program step	RSNS = 0		–50		mV
		RSNS = 1		–25		
$V_{(OFFSET)}$	SCC offset		–10		10	mV
$V_{(Scale_Err)}$	SCC scale error		–10%		10%	
$t_{(SCCD)}$	Short-circuit in charge delay		0		915	ms
$t_{(SCCD_STEP)}$	SCCD step options			61		ms
$t_{(DETECT)}$	Current fault detect time	VSRP – SRN = VTHRESH + 12.5 mV			160	µs
t_{ACC}	Overcurrent and short-circuit delay time accuracy	Accuracy of typical delay time	–20%		20%	

Copyright © 2010–2015, Texas Instruments Incorporated

6.28 SBS Timing Requirements

			MIN	TYP	MAX	UNIT
f_{SMB}	SMBus operating frequency	Slave mode, SMBC 50% duty cycle	10		100	kHz
f_{MAS}	SMBus master clock frequency	Master mode, no clock low slave extend		51.2		kHz
t_{BUF}	Bus free time between start and stop		4.7			µs
$t_{HD:STA}$	Hold time after (repeated) start		4.0			µs
$t_{SU:STA}$	Repeated start setup time		4.7			µs
$t_{SU:STO}$	Stop setup time		4.0			µs
$t_{HD:DAT}$	Data hold time		300			ns
$t_{SU:DAT}$	Data setup time		250			ns
$t_{TIMEOUT}$	Error signal/detect	See (1)	25		35	ms
t_{LOW}	Clock low period		4.7			µs
t_{HIGH}	Clock high period	See (2)			Disabled	
t_{HIGH}	Clock high period	See (2)	4.0		50	µs
$t_{LOW:SEXT}$	Cumulative clock low slave extend time	See (3)			25	ms
$t_{LOW:MEXT}$	Cumulative clock low master extend time	See (4)			10	ms
t_F	Clock/data fall time	See (5)			300	ns
t_R	Clock/data rise time	See (6)			1000	ns

(1) The bq3055 times out when any clock low exceeds $t_{TIMEOUT}$.
(2) t_{HIGH}, Max, is the minimum bus idle time. SMBC = 1 for t > 50 µs causes reset of any transaction involving bq3055 that is in progress. This specification is valid when the THIGH_VAL=0. If THIGH_VAL = 1, then the value of THIGH is set by THIGH_1,2 and the time-out is not SMBus standard.
(3) $t_{LOW:SEXT}$ is the cumulative time a slave device is allowed to extend the clock cycles in one message from initial start to the stop.
(4) $t_{LOW:MEXT}$ is the cumulative time a master device is allowed to extend the clock cycles in one message from initial start to the stop.
(5) Rise time tR = V_{ILMAX} – 0.15) to (V_{IHMIN} + 0.15)
(6) Fall time tF = 0.9 V_{DD} to (V_{ILMAX} – 0.15)

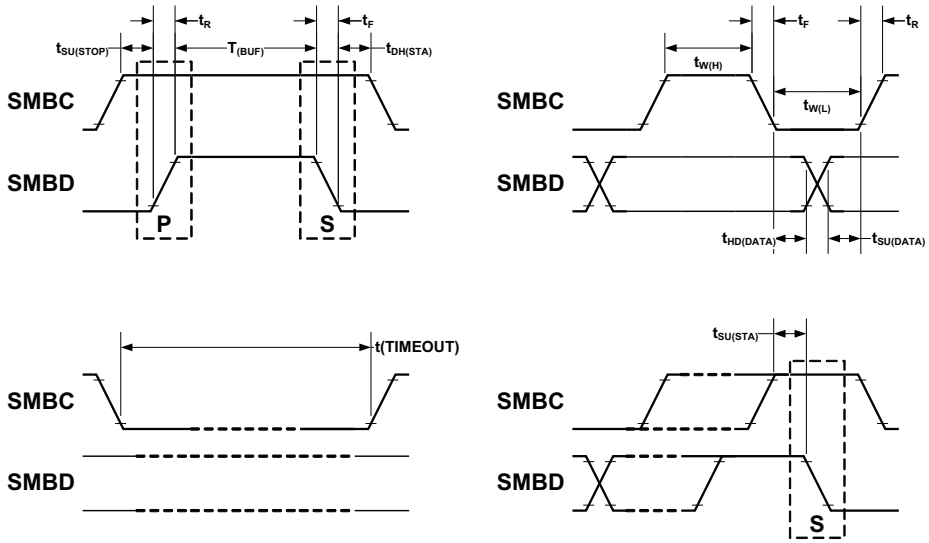

Figure 1. SMBus Timing Diagram

Copyright © 2010–2015, Texas Instruments Incorporated

6.29 Typical Characteristics

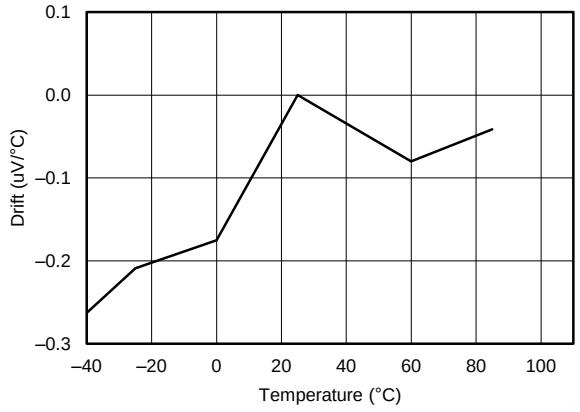

Figure 2. CC Input Offset Drift Overtemperature

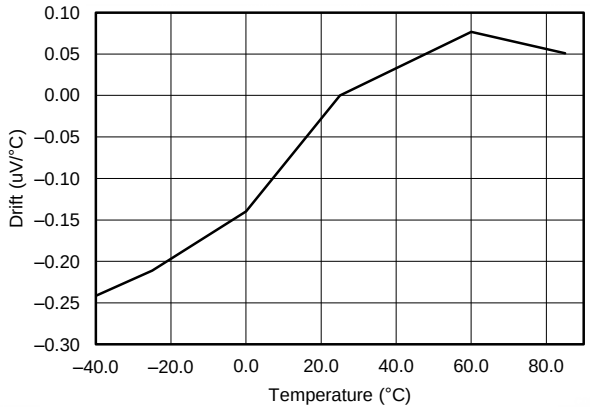

Figure 3. ADC Input Offset Drift Overtemperature

7 Parameter Measurement Information

7.1 Battery Parameter Measurements

7.1.1 Charge and Discharge Counting

The bq3055 uses an integrating delta-sigma analog-to-digital converter (ADC) for current measurement, and a second delta-sigma ADC for individual cell and battery voltage and temperature measurement.

The integrating delta-sigma ADC measures the charge/discharge flow of the battery by measuring the voltage drop across a small-value sense resistor between the SR1 and SR2 pins. The integrating ADC measures bipolar signals from –0.25 V to 0.25 V. The bq3055 detects charge activity when $V_{SR} = V_{(SRP)} – V_{(SRN)}$ is positive, and discharge activity when $V_{SR} = V_{(SRP)} – V_{(SRN)}$ is negative. The bq3055 continuously integrates the signal over time, using an internal counter. The fundamental rate of the counter is 0.65 nVh.

7.1.2 Voltage

The bq3055 updates the individual series cell voltages at 0.25-second intervals. The internal ADC of the bq3055 measures the voltage, and scales and calibrates it appropriately. This data is also used to calculate the impedance of the cell for the CEDV gas-gauging.

7.1.3 Current

The bq3055 uses the SRP and SRN inputs to measure and calculate the battery charge and discharge current using a 5-mΩ to 20-mΩ typ. sense resistor.

7.1.4 Auto Calibration

The bq3055 provides an auto-calibration feature to cancel the voltage offset error across SRN and SRP for maximum charge measurement accuracy. The bq3055 performs auto-calibration when the SMBus lines stay low continuously for a minimum of 5 s.

7.1.5 Temperature

The bq3055 has an internal temperature sensor and inputs for two external temperature sensors. All three temperature sensor options are individually enabled and configured for cell or FET temperature. Two configurable thermistor models are provided to allow the monitoring of cell temperature in addition to FET temperature, which may be of a higher temperature type.

7.1.6 Communications

The bq3055 uses SMBus v1.1 with Master Mode and packet error checking (PEC) options per the SBS specification.

7.1.6.1 SMBus On and Off State

The bq3055 detects an SMBus off state when SMBC and SMBD are low for two or more seconds. Clearing this state requires that either SMBC or SMBD transition high. The communication bus will resume activity within 1 ms.

7.1.6.2 SBS Commands

See the *bq3055 Technical Reference Manual* (SLUU440) for further details.

 Copyright © 2010–2015, Texas Instruments Incorporated

8 Detailed Description

8.1 Overview

The bq3055 device measures the voltage, temperature, and current to determine battery capacity and state-of-charge (SOC). The bq3050 monitors charge and discharge activity by sensing the voltage across a small value resistor (5 mΩ to 20 mΩ, typical) between the SRP and SRN pins and in series with the battery. By integrating charge passing through the battery, the battery's SOC is adjusted during battery charge or discharge. Measurements of OCV and charge integration determine chemical SOC.

The Qmax values are taken from a cell manufacturers' data sheet multiplied by the number of parallel cells, and is also used for the value in ***Design Capacity***. It uses the OCV and Qmax value to determine *StateOfCharge()* on battery insertion, device reset, or on command. The *FullChargeCapacity()* is reported as the learned capacity available from full charge until *Voltage()* reaches the EDV0 threshold. As *Voltage()* falls below the ***Shutdown Voltage*** for ***Shutdown Time*** and has been out of SHUTDOWN mode for at least ***Shutdown Time***, the *PF Flags1 () [VSHUT]* bit is set. For additional details, see *bq3055 Technical Reference Manual* (SLUU440).

Fuel gauging is derived from the Compensated End of Discharge Voltage (CEDV) method, which uses a mathematical model to correlate remaining state of charge (RSOC) and voltage near to the end of discharge state. This requires a full-discharge cycle for a single-point FCC update. The implementation models cell voltage (OCV) as a function of battery SOC, temperature, and current. The impedance is also a function of SOC and temperature, which can be satisfied by using seven parameters: EMF, C0, R0, T0, R1, TC, and C1.

8.1.1 Configuration

8.1.1.1 Oscillator Function

The bq3055 fully integrates the system oscillators and does not require any external components to support this feature.

8.1.1.2 System Present Operation

The bq3055 checks the $\overline{\text{PRES}}$ pin periodically (1 s). If $\overline{\text{PRES}}$ input is pulled to ground by the external system, the bq3055 detects this as system present.

8.1.1.3 2-, 3-, or 4-Cell Configuration

In a 2-cell configuration, VC1 is shorted to VC2 and VC3. In a 3-cell configuration, VC1 is shorted to VC2.

8.1.1.4 Cell Balancing

The device supports cell balancing by bypassing the current of each cell during charging or at rest. If the device's internal bypass is used, up to 10 mA can be bypassed and multiple cells can be bypassed at the same time. Higher cell balance current can be achieved by using an external cell balancing circuit. In external cell balancing mode, only one cell at a time can be balanced.

The cell balancing algorithm determines the amount of charge needed to be bypassed to balance the capacity of all cells.

8.1.1.4.1 Internal Cell Balancing

When internal cell balancing is configured, the cell balance current is defined by the external resistor R_{VC} at the VCx input. See Figure 4.

Overview (continued)

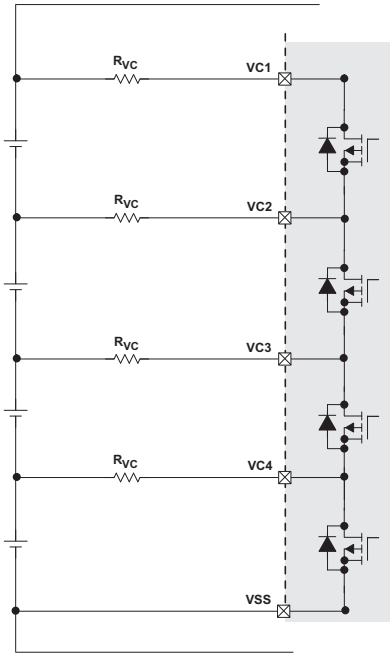

Figure 4. Internal Cell Balancing with R_{VC}

8.1.1.4.2 External Cell Balancing

When external cell balancing is configured, the cell balance current is defined by R_B. See Figure 5. Only one cell at a time can be balanced.

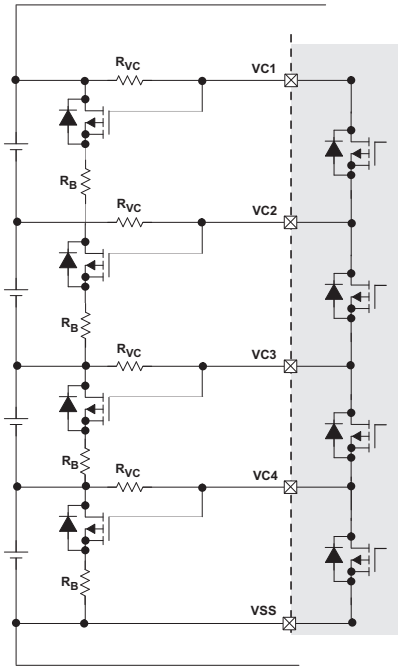

Figure 5. External Cell Balancing with R_B

Copyright © 2010–2015, Texas Instruments Incorporated

8.2 Functional Block Diagram

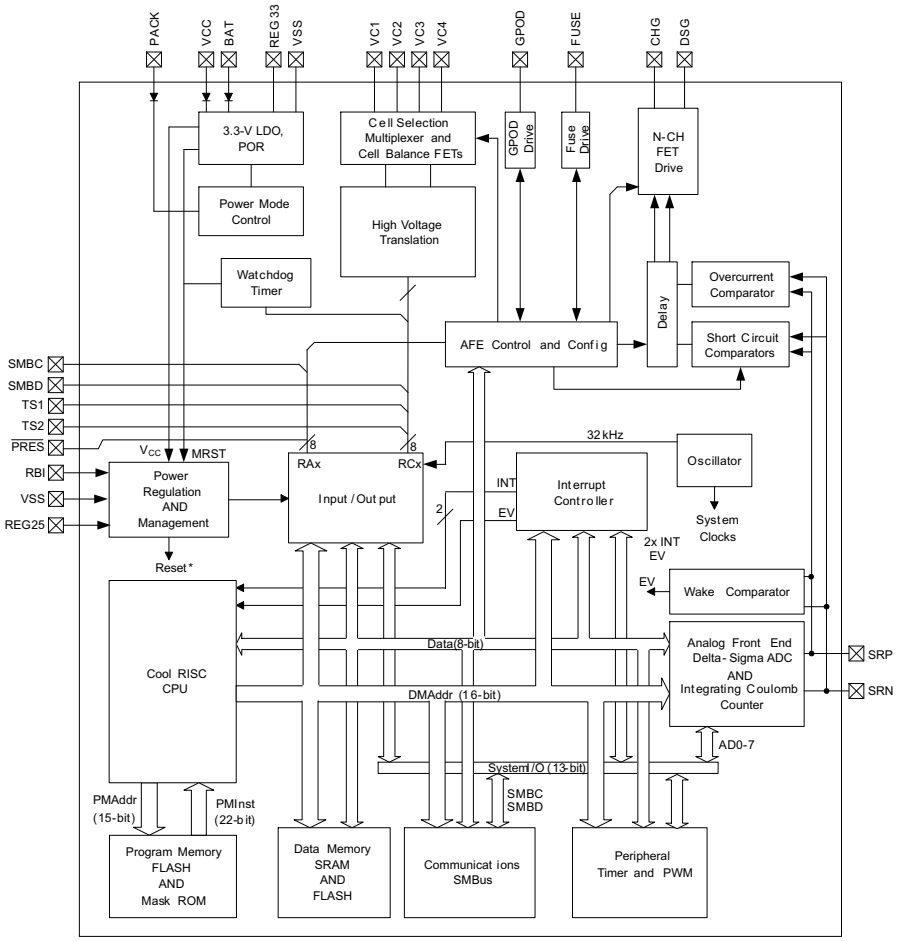

8.3 Feature Description

8.3.1 Primary (1st Level) Safety Features

The bq3055 supports a wide range of battery and system protection features that can easily be configured. The primary safety features include:

- Cell Overvoltage and Undervoltage Protection
- Charge and Discharge Overcurrent
- Short-Circuit
- Charge and Discharge Overtemperature
- AFE Watchdog

8.3.2 Secondary (2nd Level) Safety Features

The secondary safety features of the bq3055 can be used to indicate more serious faults through the FUSE pin. This pin can be used to blow an in-line fuse to permanently disable the battery pack from charging or discharging. The secondary safety protection features include:

- Safety Overvoltage
- Safety Overcurrent in Charge and Discharge
- Safety Overtemperature in Charge and Discharge
- Charge FET, Discharge FET, and Precharge FET Faults
- Cell Imbalance Detection

Feature Description (continued)

- Fuse Blow by Secondary Voltage Protection IC
- AFE Register Integrity Fault (AFE_P)
- AFE Communication Fault (AFE_C)

8.3.3 Charge Control Features

The bq3055 charge control features include:

- Supports JEITA temperature ranges. Reports charging voltage and charging current according to the active temperature range
- Handles more complex charging profiles. Allows for splitting the standard temperature range into two sub-ranges and allows for varying the charging current according to the cell voltage
- Reports the appropriate charging current needed for constant current charging and the appropriate charging voltage needed for constant voltage charging to a smart charger using SMBus broadcasts
- Reduce the charge difference of the battery cells in fully charged state of the battery pack gradually using a voltage-based cell balancing algorithm during charging. A voltage threshold can be set up for cell balancing to be active. This prevents fully charged cells from overcharging and causing excessive degradation and also increases the usable pack energy by preventing premature charge termination.
- Supports precharging and zero-volt charging
- Supports charge inhibit and charge suspend if battery pack temperature is out of temperature range
- Reports charging fault and also indicate charge status through charge and discharge alarms

8.3.4 Gas Gauging

The bq3055 uses the CEDV algorithm to measure and calculate the available capacity in battery cells. The bq3055 accumulates a measure of charge and discharge currents and compensates the charge current measurement for the temperature and state-of-charge of the battery. The bq3055 estimates self-discharge of the battery and also adjusts the self-discharge estimation based on temperature. See the *bq3055 Technical Reference Manual* (SLUU440) for further details.

8.3.5 Lifetime Data Logging Features

The bq3055 offers limited lifetime data logging for the following critical battery parameters:

- Lifetime Maximum Temperature
- Lifetime Minimum Temperature
- Lifetime Maximum Battery Cell Voltage
- Lifetime Minimum Battery Cell Voltage

8.3.6 Authentication

- The bq3055 supports authentication by the host using SHA-1.
- SHA-1 authentication by the gas gauge is required for unsealing and full access.

8.4 Device Functional Modes

The bq3055 supports three power modes to reduce power consumption:

- In NORMAL Mode, the bq3055 performs measurements, calculations, protection decisions, and data updates in 0.25-s intervals. Between these intervals, the bq3055 is in a reduced power stage.
- In SLEEP Mode, the bq3055 performs measurements, calculations, protection decisions, and data updates in adjustable time intervals. Between these intervals, the bq3055 is in a reduced power stage. The bq3055 has a wake function that enables exit from Sleep mode when current flow or failure is detected.
- In SHUTDOWN Mode, the bq3055 is completely disabled.

Copyright © 2010–2015, Texas Instruments Incorporated

9 Application and Implementation

NOTE

Information in the following applications sections is not part of the TI component specification, and TI does not warrant its accuracy or completeness. TI's customers are responsible for determining suitability of components for their purposes. Customers should validate and test their design implementation to confirm system functionality.

9.1 Application Information

The bq3055 gas gauge is a primary protection device that can be used with a 2-series, 3-series, or 4-series Li-Ion or Li-Polymer battery pack. To implement and design a comprehensive set of parameters for a specific battery pack, the user needs the bqEVSW tool, which is a graphical user-interface tool installed on a PC during development. The firmware installed in the product has default values, which are summarized in the *bq3055 Technical Reference Manual* (SLUU440). Using the bqEVSW tool, these default values can be changed to cater to specific application requirements during development once the system parameters are known, such as fault-trigger thresholds for protection, enable or disable certain features for operation, configuration of cells, and more.

9.2 Typical Application

In a typical application, the bq3055 is typically paired with a 2nd-level overvoltage protection device to provide an independent level of voltage protection. Figure 6 shows a typical application.

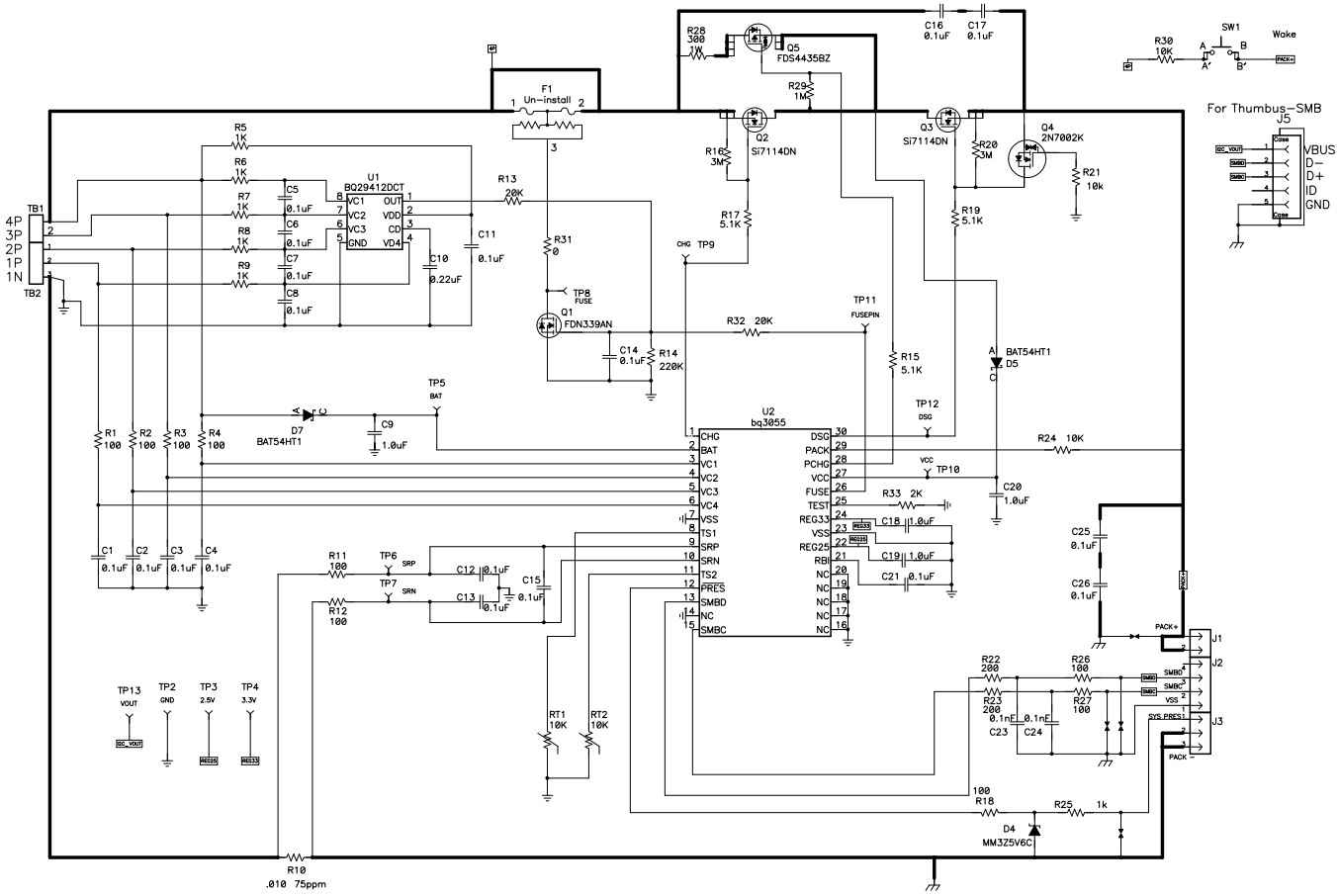

Figure 6. Application Schematic

Typical Application (continued)

9.2.1 Design Requirements

For the bq3055 design example, use the parameters in Table 1 as input parameters.

Table 1. Requirements

DESIGN PARAMETER	VALUE OR STATE
Cell Configuration	3s2p (4-series with 1 Parallel)
Design Capacity	4400 mAh
Device Chemistry	Chem ID 100 (LiCoO2/graphitized carbon)
Cell Overvoltage (per cell)	4500 mV
Cell Undervoltage (per cell)	2200 mV
1st Tier Overcurrent in CHARGE Mode	6000 mA
1st Tier Overcurrent in DISCHARGE Mode	–6000 mA
AFE Overcurrent in CHARGE Mode	0.120 V/Rsense across SRP, SRN
AFE Short-Circuit in DISCHARGE Mode	0.450 V/Rsense across SRP, SRN
AFE Short-Circuit in CHARGE Mode	0.250V/Rsense across SRP, SRN
Overtemperature in CHARGE Mode	55°C
Overtemperature in DISCHARGE Mode	60°C
SAFE Pin Activation Enabled	No
Safety Overvoltage (per cell)	4600 mV
Shutdown Voltage	5250 mV
Cell Balancing Enabled	Yes
Internal or External Temperature Sensor	External Enabled
SMB BROADCAST Mode	Disabled
PRES Feature Enabled	No

9.2.2 Detailed Design Procedure

9.2.2.1 High-Current Path

The high-current path begins at the PACK+ terminal of the battery pack. As charge current travels through the pack, it finds its way through protection FETs, a chemical fuse, the lithium-ion cells and cell connections, and the sense resistor, and then returns to the PACK– terminal. In addition, some components are placed across the PACK+ and PACK– terminals to reduce effects from electrostatic discharge.

9.2.2.1.1 Protection FETs

The N-channel charge and discharge FETs must be selected for a given application (Figure 7). Most portable battery applications are a good match for the CSD17308Q3. The TI CSD17308Q3 is an 47A-A, 30-V device with Rds(on) of 8.2 mΩ when the gate drive voltage is 10 V.

If a precharge FET is used, R28 is calculated to limit the precharge current to the desired rate. Be sure to account for the power dissipation of the series resistor. The precharge current is limited to $(V_{charger} – V_{bat})/R28$ and maximum power dissipation is $(V_{charger} – V_{bat})^2/R28$.

The gates of all protection FETs are pulled to the source with a high-value resistor between the gate and source to ensure they are turned off if the gate drive is open.

Capacitors C16 and C17 help protect the FETs during an ESD event. The use of two devices ensures normal operation if one of them becomes shorted. To have good ESD protection, the copper trace inductance of the capacitor leads must be designed to be as short and wide as possible. Ensure that the voltage rating of both C16 and C17 are adequate to hold off the applied voltage if one of the capacitors becomes shorted.

Copyright © 2010–2015, Texas Instruments Incorporated

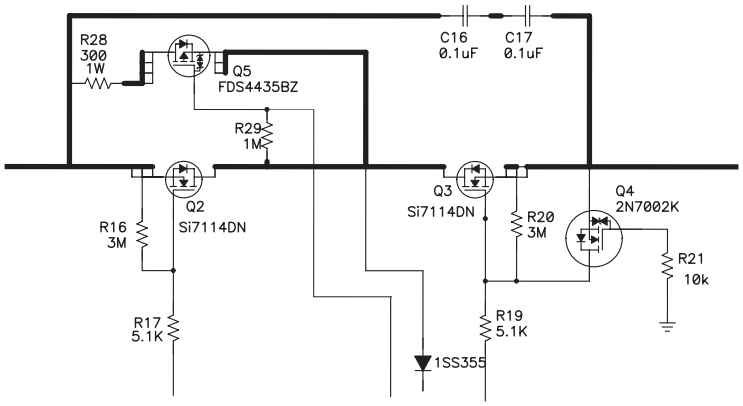

Figure 7. bq3055 Protection FETs

9.2.2.1.2 Chemical Fuse

The chemical fuse (Sony Chemical, Uchihashi, and so forth) is ignited under command from either the bq294705 secondary voltage protection IC or from the FUSE pin of the gas gauge. Either event applies a positive voltage to the gate of Q1, shown in Figure 8, which then sinks current from the third terminal of the fuse, causing it to ignite and open permanently.

It is important to carefully review the fuse specifications and match the required ignition current to that available from the N-channel FET. Ensure that the proper voltage, current, and Rds(on) ratings are used for this device. The fuse control circuit is discussed in detail in *FUSE Circuitry*.

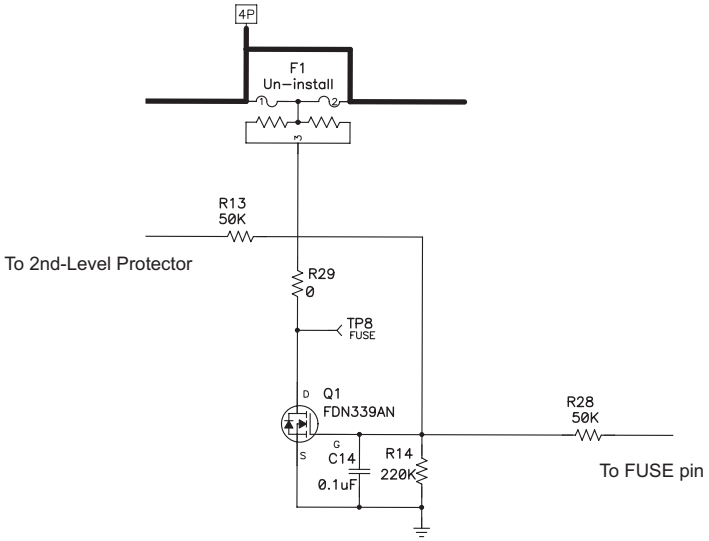

Figure 8. FUSE Circuit

9.2.2.1.3 Lithium-Ion Cell Connections

The important thing to remember about the cell connections is that high current flows through the top and bottom connections; therefore, the voltage sense leads at these points must be made with a Kelvin connection to avoid any errors due to a drop in the high-current copper trace. The location marked 4P in Figure 9 indicates the Kelvin connection of the most positive battery node. The connection marked 1N is equally important. The VC5 pin (a ground reference for cell voltage measurement), which is in the older generation devices, is not in the bq3055 device. Hence, the single-point connection at 1N to the low-current ground is needed to avoid an undesired voltage drop through long traces while the gas gauge is measuring the bottom cell voltage.

Copyright © 2010–2015, Texas Instruments Incorporated

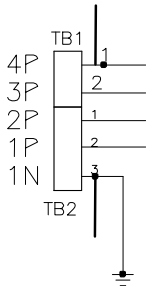

Figure 9. Lithium-Ion Cell Connections

9.2.2.1.4 Sense Resistor

As with the cell connections, the quality of the Kelvin connections at the sense resistor is critical. The sense resistor must have a temperature coefficient no greater than 75 ppm to minimize current measurement drift with temperature (Figure 10). Choose the value of the sense resistor to correspond to the available overcurrent and short-circuit ranges of the bq3055. Select the smallest value possible to minimize the negative voltage generated on the bq3055 V_{SS} nodes during a short-circuit. This pin has an absolute minimum of –0.3 V. For a pack with two parallel cylindrical cells, 10 mΩ is generally ideal. Parallel resistors can be used as long as good Kelvin sensing is ensured.

The ground scheme of bq3055 is different from the older generation devices. In previous devices, the device ground (or low-current ground) is connected to the SRN side of the Rsense resistor pad. The bq3055, however, connects the low-current ground on the SRP side of the Rsense resistor pad, close to the battery 1N terminal (see *Lithium-Ion Cell Connections*). This is because the bq3055 has one less VC pin (a ground reference pin VC5) compared to the previous devices. The pin was removed and was internally combined to SRP.

Figure 10. Sense Resistor

9.2.2.1.5 ESD Mitigation

A pair of series 0.1-µF ceramic capacitors is placed across the PACK+ and PACK– terminals to help in the mitigation of external electrostatic discharges. The two devices in series ensure continued operation of the pack if one of the capacitors becomes shorted.

Optionally, a tranzorb, such as the SMBJ2A, can be placed across the terminals to further improve ESD immunity.

9.2.2.2 Gas Gauge Circuit

The Gas Gauge Circuit includes the bq3055 and its peripheral components. These components are divided into the following groups: Differential Low-Pass Filter, Power Supply Decoupling/RBI, System Present, SMBus Communication, FUSE circuit, and LED.

9.2.2.2.1 Differential Low-Pass Filter

As shown in Figure 11, a differential filter must precede the current sense inputs of the gas gauge. This filter eliminates the effect of unwanted digital noise, which can cause offset in the measured current. Even the best differential amplifier has less common-mode rejection at high frequencies. Without a filter, the amplifier input stage may rectify a strong RF signal, which then may appear as a DC offset error.

Five percent tolerance of the components is adequate because capacitor C15 shunts C12/C13, and reduces AC common mode arising from component mismatch. It is also proven to reduce offset and noise error by maintaining µa symmetrical placement pattern and adding ground shielding for the differential filter network.

Copyright © 2010–2015, Texas Instruments Incorporated

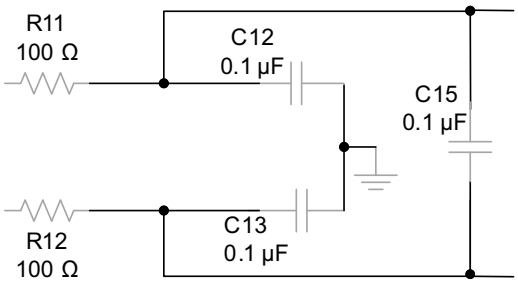

Figure 11. Differential Low-Pass Filter

9.2.2.2.2 Power Supply Decoupling and RBI

Power supply decoupling is important for optimal operation of the bq3055 advanced gas gauges. As shown in Figure 12, a single 1-µF ceramic decoupling capacitor from REG33 to V_{SS} and REG25 to V_{SS} must be placed adjacent to the IC pins.

The RBI pin is used to supply backup RAM voltage during brief transient power outages. The partial reset mechanism makes use of the RAM to restore the critical CPU registers following a temporary loss of power. A standard 0.1-µF ceramic capacitor is connected from the RBI pin to ground, as shown in Figure 12.

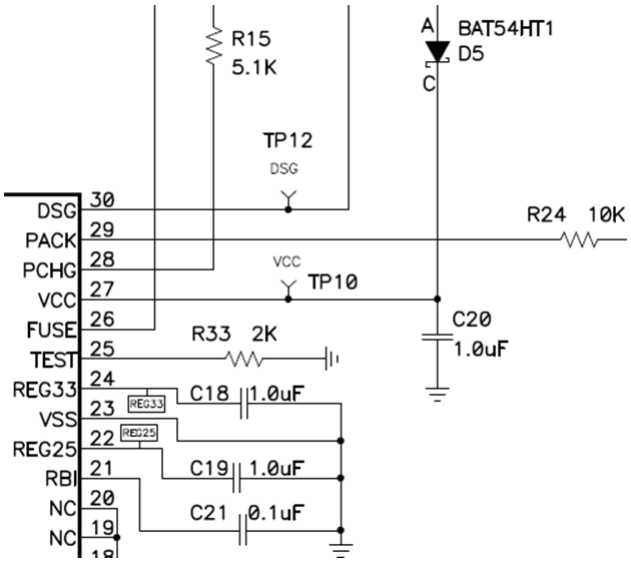

Figure 12. Power Supply Decoupling

9.2.2.2.3 System Present

The System Present signal is used to inform the gas gauge whether the pack is installed into or removed from the system. In the host system, this pin is grounded. The PRES pin of the bq3055 is occasionally sampled to test for system present. To save power, an internal pullup resistor is provided by the gas gauge during a brief 4-µs sampling pulse once per second.

Because the System Present signal is part of the pack connector interface to the outside world, it must be protected from external electrostatic discharge events. An integrated ESD protection on the PRES device pin reduces the external protection requirement to just R25 for an 8-kV ESD contact rating (Figure 13). However, if it is possible that the System Present signal may short to PACK+, then R18 and D3 must be included for high-voltage protection.

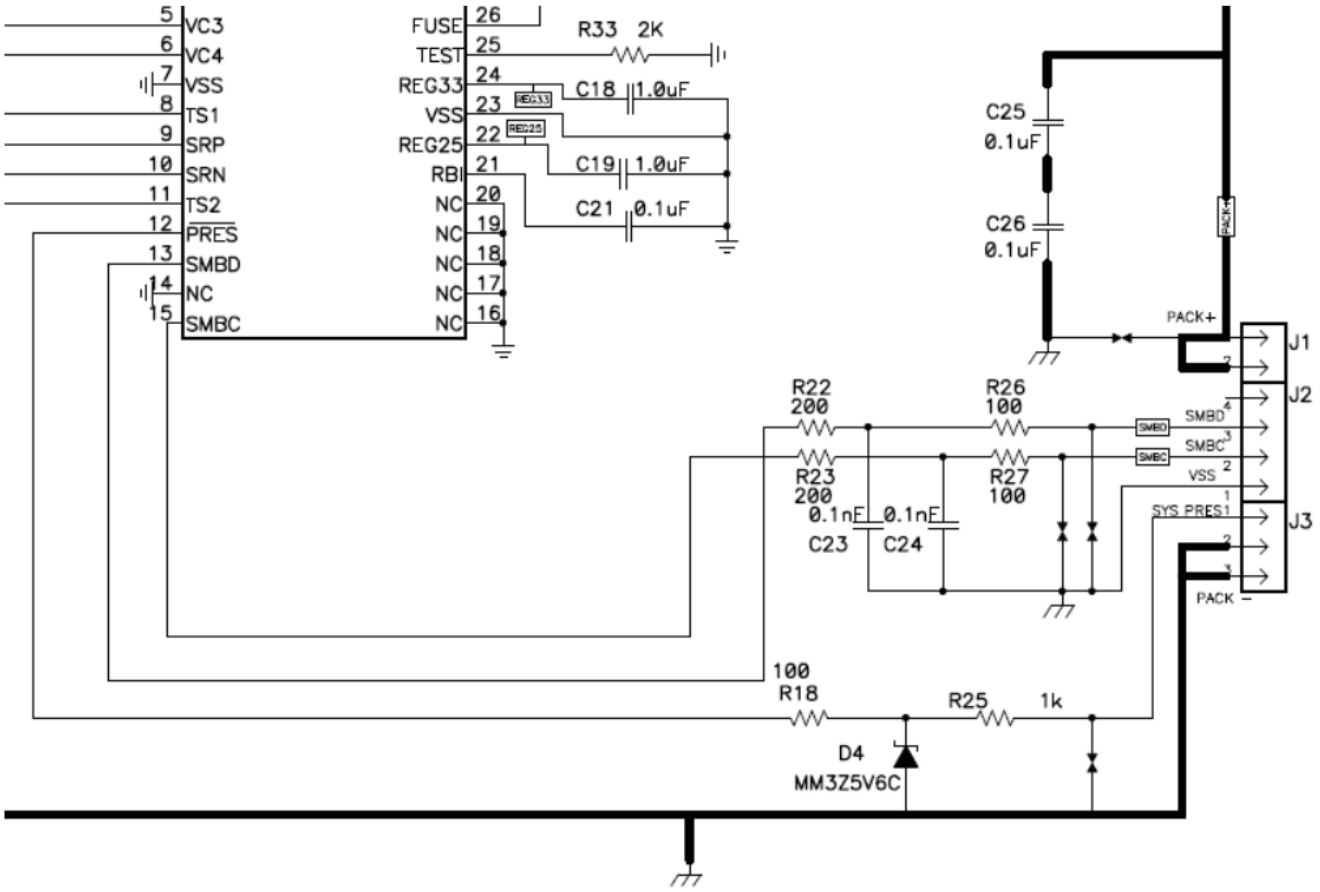

Figure 13. System Present ESD and Short Protection

9.2.2.2.4 SMBus Communication

Similar to the System Present pin, the SMBus clock and data pins have integrated high-voltage ESD protection circuits that reduce the need for external Zener diode protection. When using the circuit shown in Figure 14, the communication lines can withstand an 8-kV (contact) ESD strike. C23 and C24 are selected with a 100-pF value to meet the SMBus specifications. If it is desirable to provide increased protection with a larger input resistor and/or Zener diode, carefully investigate the signal quality of the SMBus signals under worst-case communication conditions.

The SMbus clock and data lines have internal pulldowns. When the gas gauge senses that both lines are low (such as during removal of the pack), the device performs auto-offset calibration and then goes into sleep mode to conserve power.

Copyright © 2010–2015, Texas Instruments Incorporated

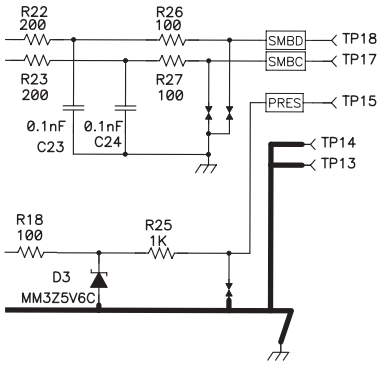

Figure 14. ESD Protection for SMB Communication

9.2.2.2.5 FUSE Circuitry

The FUSE pin of the bq3055 is designed to ignite the chemical fuse if one of the various safety criteria is violated (Figure 15). The FUSE pin also monitors the state of the secondary-voltage protection IC. Q3 ignites the chemical fuse when its gate is high. The 7-V output of the bq29705 is divided by R13 and R14, which provides adequate gate drive for Q1 while guarding against excessive back current into the bq29705 if the FUSE signal is high.

Using C14 is generally a good practice, especially for RFI immunity. C14 may be removed, if desired, because the chemical fuse is a comparatively slow device and is not affected by any sub-microsecond glitches that may come from the SAFE output during the cell connection process.

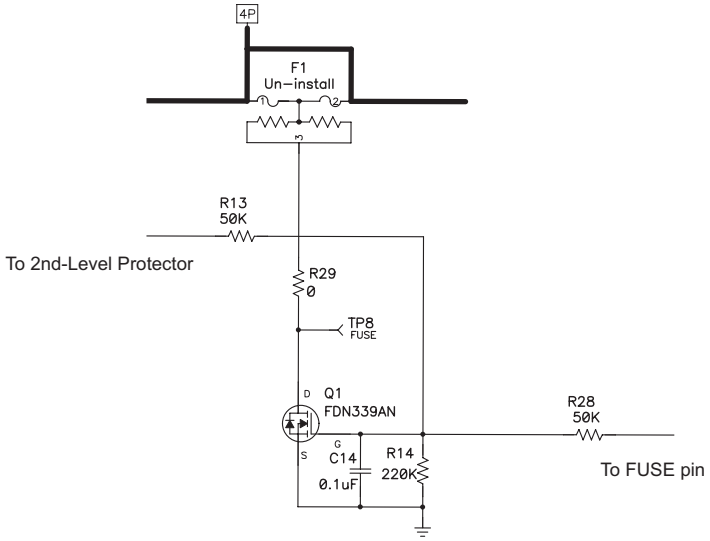

Figure 15. FUSE Circuit

When the bq3055 is commanded to ignite the chemical fuse, the FUSE pin activates to give a typical 8-V output. The new design makes it possible to use a higher Vgs FET for Q1. This improves the robustness of the system, as well as widens the choices for Q1.

9.2.2.2.6 PFIN Detection

As previously mentioned, the FUSE pin has a dual role on this device. When bq3055 is not commanded to ignite the chemical fuse, the FUSE pin defaults to sense the OUT pin status of the secondary voltage protector. When the secondary voltage protector ignites the chemical fuse, the high voltage is sensed by the FUSE pin, and the bq3055 sets the PFIN flag accordingly.

Copyright © 2010–2015, Texas Instruments Incorporated

9.2.2.3 Secondary-Current Protection

The bq3055 provides secondary overcurrent and short-circuit protection, cell balancing, cell voltage multiplexing, and voltage translation. The following sections examine Cell and Battery Inputs, Pack and FET Control, Regulator Output, Temperature Output, and Cell Balancing.

9.2.2.3.1 Cell and Battery Inputs

Each cell input is conditioned with a simple RC filter, which provides ESD protection during cell connect and acts to filter unwanted voltage transients. The resistor value allows some trade-off for cell balancing versus safety protection.

The internal cell balancing FETs in bq3055 provide about typically 310 Ω (310 Ω with cell voltage ≥ 2 V. The cell balancing FETs Rds-on reduced to typically 125 Ω with cell voltage ≥ 4 V), which can be used to bypass charge current in individual cells that may be overcharged with respect to the others (Figure 16). The purpose of this bypass path is to reduce the current into any one cell during charging to bring the series elements to the same voltage. Series resistors placed between the input pins and the positive series element nodes control the bypass current value. The bq3055 device is designed to take up to 10-mA cell balancing current. Series input resistors between 100 Ω and 1 kΩ are recommended for effective cell balancing.

The BAT input uses a diode (D1) and 1-µF ceramic capacitor (C9) to isolate and decouple it from the cells in the event of a transient dip in voltage caused by a short-circuit event.

Also, as described previously in *High-Current Path*, the top and bottom nodes of the cells must be sensed at the battery connections with a Kelvin connection to prevent voltage sensing errors caused by a drop in the high-current PCB copper.

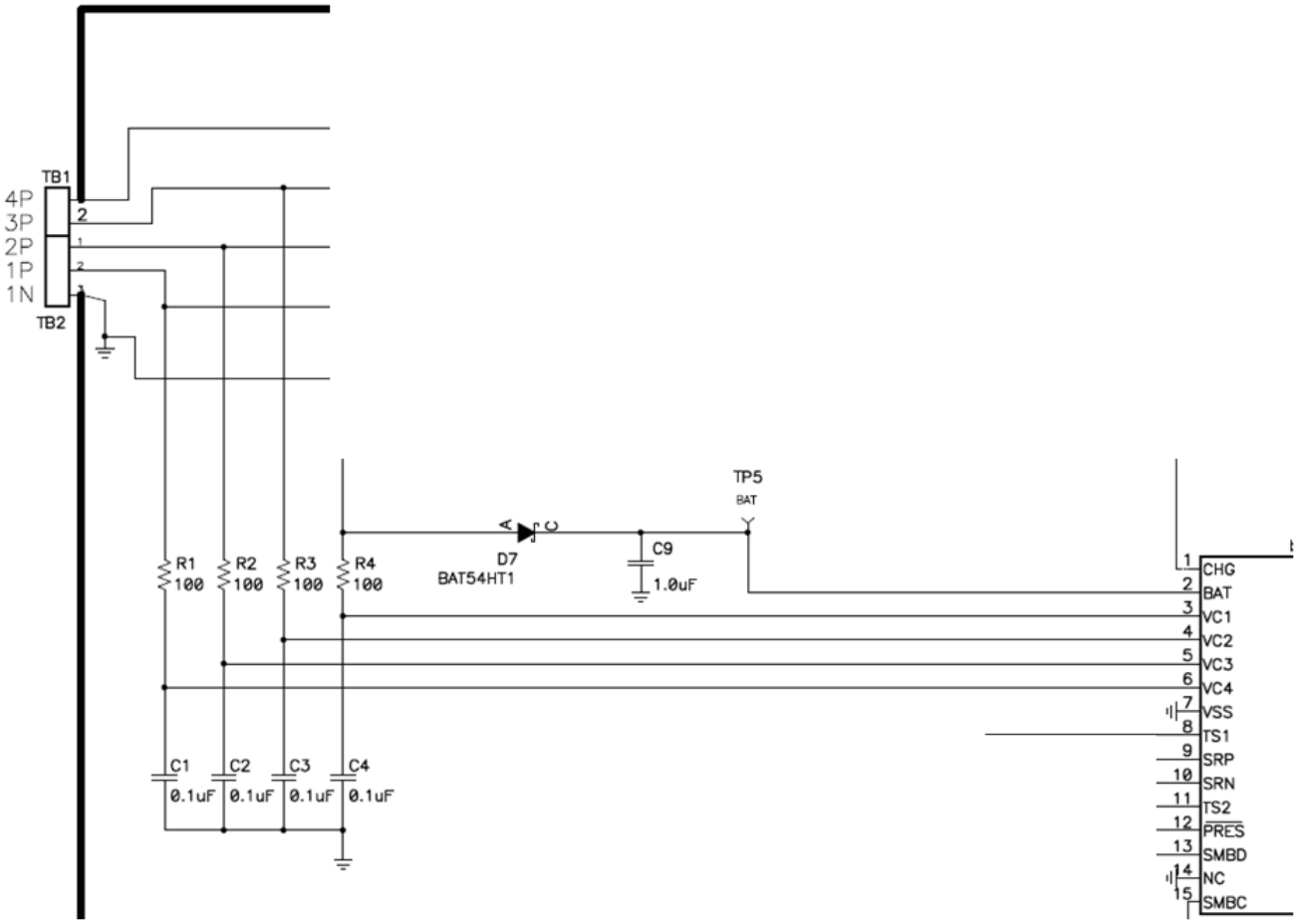

Figure 16. Cell and BAT Inputs

Copyright © 2010–2015, Texas Instruments Incorporated

9.2.2.3.2 External Cell Balancing

Internal cell balancing can only support up to 10 mA. External cell balancing provides another option for faster cell balancing. For details, refer to the application note, *Fast Cell Balancing Using External MOSFET* (SLUA420).

9.2.2.3.3 PACK and FET Control

The PACK and V_{CC} inputs provide power to the bq305x from the charger. The PACK input also provides a method to measure and detect the presence of a charger. The PACK input uses a 10-KΩ resistor, whereas the V_{CC} input uses a diode to guard against input transients and prevents malfunction of the date driver during short-circuit events (Figure 17).

The N-channel charge and discharge FETs are controlled with 5.1-KΩ series gate resistors, which provide a switching time constant of a few microseconds. The 3.01-MΩ resistors ensure that the FETs are off in the event of an open connection to the FET drivers. Q4 is provided to protect the discharge FET (Q3) in the event of a reverse-connected charger. Without Q4, Q3 can be driven into its linear region and suffer severe damage if the PACK+ input becomes slightly negative.

Q4 turns on in that case to protect Q3 by shorting its gate to source. To use the simple ground gate circuit, the FET must have a low gate turnon threshold. If it is desired to use a more standard device, such as the 2N7000 as the reference schematic, the gate should be biased up to 3.3 V with a high-value resistor. The bq3055 device uses an external P-channel, precharge FET controlled by GPOD. When selecting the external load resistor, user should take into account the max charger voltage and the Rdson of the internal precharge FET.

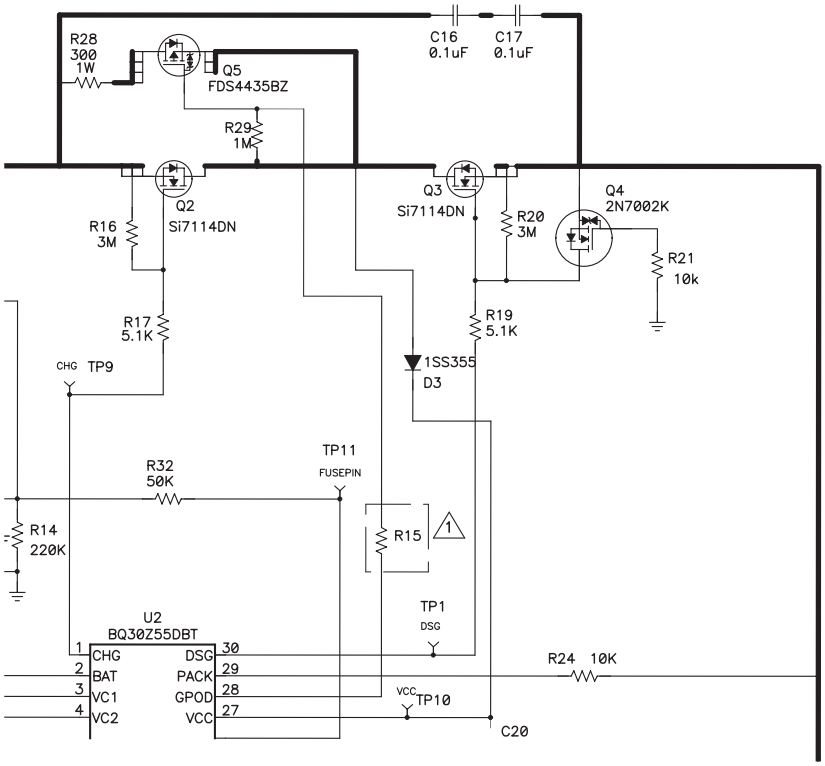

Figure 17. bq3055 PACK and FET Control

9.2.2.3.4 Regulator Output

As mentioned in *Power Supply Decoupling and RBI*, the two low-dropout regulators in the bq3055 require capacitive compensation on the output. The outputs must have a 1-µF ceramic capacitor placed close to the IC terminal pins.

9.2.2.3.5 Temperature Output

For the bq3055 device, TS1 and TS2 provide thermistor drive-under program control (Figure 18). Each pin can be enabled with an integrated 18-kΩ (typical) linearization pullup resistor to support the use of a 10-kΩ at 25°C (103) NTC external thermistor, such as a Mitsubishi BN35-3H103. The reference design includes two 10-kΩ thermistors: RT1 and RT2.

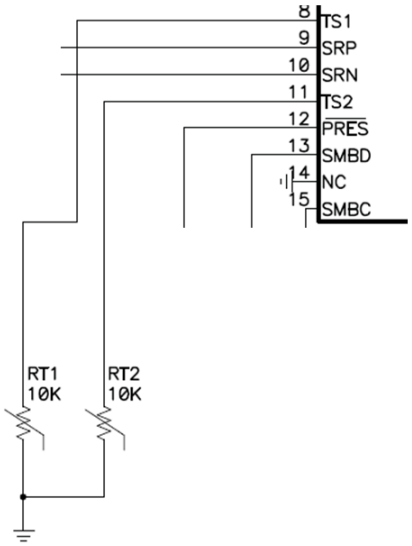

Figure 18. Thermistor Drive

9.2.2.4 Secondary-Overvoltage Protection

The bq29705 provides secondary-overvoltage protection and commands the chemical fuse to ignite if any cell exceeds the internally referenced threshold. The peripheral components are Cell Inputs and Time Delay Capacitor.

9.2.2.4.1 Cell Inputs

An input filter is provided for each cell input. This comprises the resistors R5, R6, R7, and R9 along with capacitors C5, C6, C7, and C8 (Figure 19). This input network is completely independent of the filter network used as input to thebq3055. To ensure independent safety functionality, the two devices must have separate input filters.

Because the filter capacitors are implemented differentially, a low-voltage device can be used in each case.

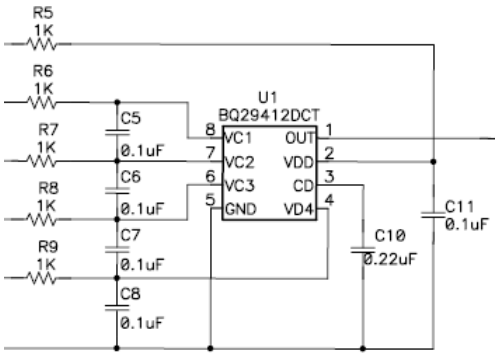

Figure 19. bq29705 Cell Inputs and Time-Delay Capacitor

Copyright © 2010–2015, Texas Instruments Incorporated

9.2.2.4.2 Time-Delay Capacitor

C10 sets the time delay for activation of the output after any cell exceeds the threshold voltage. The time delay is calculated as td = 1.2 V × DelayCap (µF)/0.18 µA.

9.2.3 Application Curves

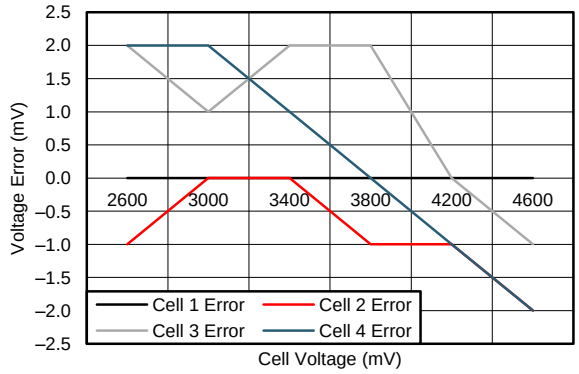

Figure 20. Cell Voltage Error Across Input Range at 25°C

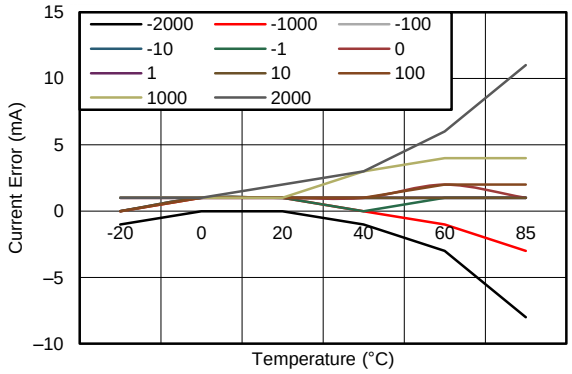

Figure 21. Current Error vs Temperature

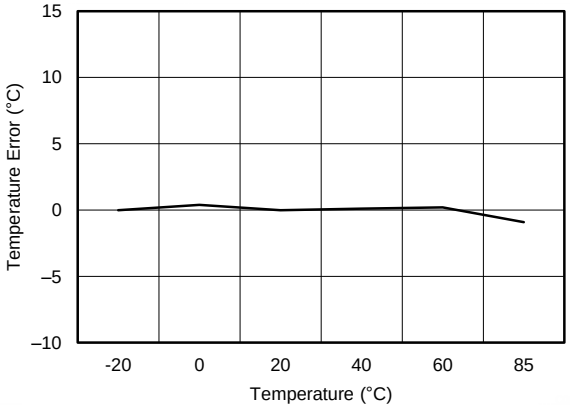

Figure 22. TSx Error vs Temperature

9.3 System Example

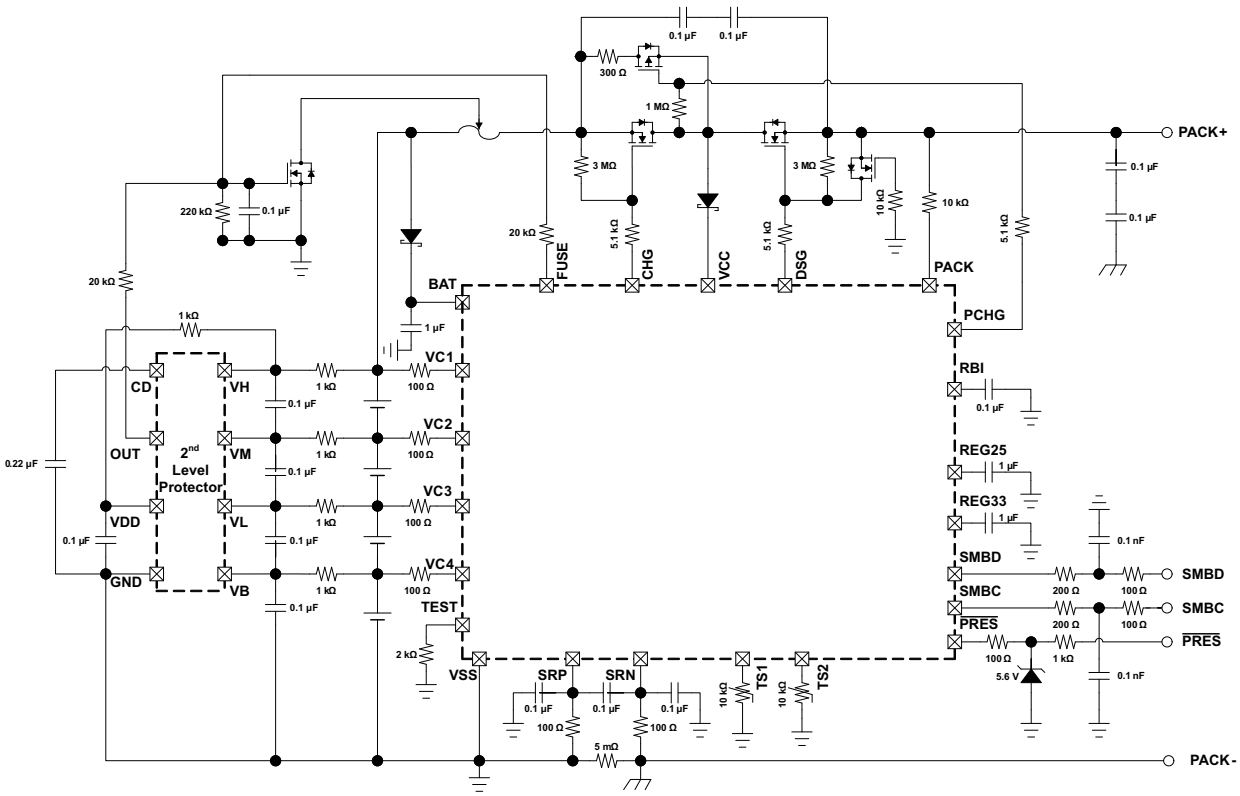

Figure 23. bq3055 Implementation

Copyright © 2010–2015, Texas Instruments Incorporated

10 Power Supply Recommendations

Power supply decoupling is important for optimal operation of the bq3055 Gas Gauge. A single 1.0-µF ceramic decoupling capacitor from REG33 to VSS and REG25 to VSS must be placed adjacent to the integrated circuit (IC) pins.

The RBI pin is used to supply backup RAM voltage during brief transient-power outages. The partial reset mechanism makes use of RAM to restore the critical CPU registers following a temporary loss of power. A standard 0.1-µF ceramic capacitor is connected from the RBI pin to ground.

11 Layout

11.1 Layout Guidelines

The predominant layout concern for the bq3055 is related to the coulomb counter measurement. The external components and PCB layout surrounding the SRP and SRN pins should be carefully considered.

11.2 Layout Example

As shown in Figure 24, a differential filter must precede the current sense inputs of the gas gauge. This filter eliminates the effect of unwanted digital noise, which can cause offset in the measured current. Even the best differential amplifier has less common-mode rejection at high frequencies. Without a filter, the amplifier input stage may rectify a strong RF signal, which then may appear as a DC-offset error.

Five percent tolerance of the components is adequate, because capacitor C15 shunts C12 and C13 and reduces AC common mode arising from a component mismatch. It is important to locate C15 as close as possible to the gas gauge pins. The other components also must be relatively close to the IC. The ground connection of C12 and C13 must be close to the IC. It is also proven to reduce offset and noise error by maintaining a symmetrical placement pattern and adding ground shielding for the differential filter network.

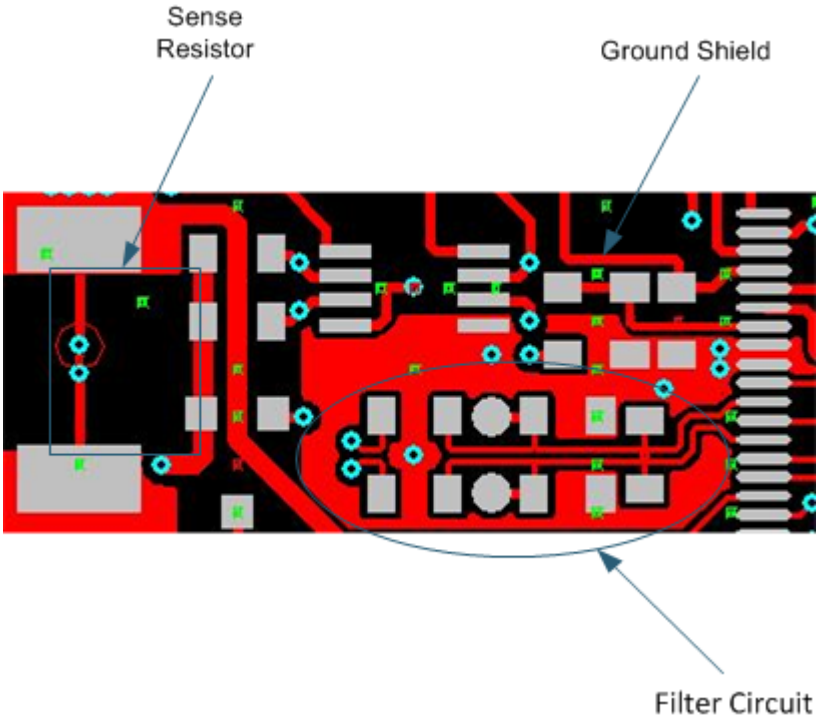

Figure 24. PCB Layout Example

12 Device and Documentation Support

12.1 Documentation Support

12.1.1 Related Documentation

For related documentation, see the following:

- *bq3055 Technical Reference Manual* (SLUU440)
- *Fast Cell Balancing Using External MOSFET* (SLUA420)

12.2 Community Resources

The following links connect to TI community resources. Linked contents are provided "AS IS" by the respective contributors. They do not constitute TI specifications and do not necessarily reflect TI's views; see TI's Terms of Use.

TI E2E™ Online Community ***TI's Engineer-to-Engineer (E2E) Community.*** Created to foster collaboration among engineers. At e2e.ti.com, you can ask questions, share knowledge, explore ideas and help solve problems with fellow engineers.

Design Support ***TI's Design Support*** Quickly find helpful E2E forums along with design support tools and contact information for technical support.

12.3 Trademarks

E2E is a trademark of Texas Instruments.
All other trademarks are the property of their respective owners.

12.4 Glossary

SLYZ022 — *TI Glossary*.

This glossary lists and explains terms, acronyms, and definitions.

13 Mechanical, Packaging, and Orderable Information

The following pages include mechanical packaging and orderable information. This information is the most current data available for the designated devices. This data is subject to change without notice and revision of this document. For browser-based versions of this data sheet, refer to the left-hand navigation.

Copyright © 2010–2015, Texas Instruments Incorporated

PACKAGING INFORMATION

Orderable part number	Status (1)	Material type (2)	Package | Pins	Package qty | Carrier	RoHS (3)	Lead finish/ Ball material (4)	MSL rating/ Peak reflow (5)	Op temp (°C)	Part marking (6)
BQ3055DBT	Active	Production	TSSOP (DBT) | 30	60 | TUBE	Yes	NIPDAU	Level-2-260C-1 YEAR	-40 to 85	BQ3055
BQ3055DBT.A	Active	Production	TSSOP (DBT) | 30	60 | TUBE	Yes	NIPDAU	Level-2-260C-1 YEAR	-40 to 85	BQ3055
BQ3055DBT.B	Active	Production	TSSOP (DBT) | 30	60 | TUBE	Yes	NIPDAU	Level-2-260C-1 YEAR	-40 to 85	BQ3055
BQ3055DBTR	Active	Production	TSSOP (DBT) | 30	2000 | LARGE T&R	Yes	NIPDAU	Level-2-260C-1 YEAR	-40 to 85	BQ3055
BQ3055DBTR.A	Active	Production	TSSOP (DBT) | 30	2000 | LARGE T&R	Yes	NIPDAU	Level-2-260C-1 YEAR	-40 to 85	BQ3055

(1) **Status:** For more details on status, see our product life cycle.

(2) **Material type:** When designated, preproduction parts are prototypes/experimental devices, and are not yet approved or released for full production. Testing and final process, including without limitation quality assurance, reliability performance testing, and/or process qualification, may not yet be complete, and this item is subject to further changes or possible discontinuation. If available for ordering, purchases will be subject to an additional waiver at checkout, and are intended for early internal evaluation purposes only. These items are sold without warranties of any kind.

(3) **RoHS values:** Yes, No, RoHS Exempt. See the TI RoHS Statement for additional information and value definition.

(4) **Lead finish/Ball material:** Parts may have multiple material finish options. Finish options are separated by a vertical ruled line. Lead finish/Ball material values may wrap to two lines if the finish value exceeds the maximum column width.

(5) **MSL rating/Peak reflow:** The moisture sensitivity level ratings and peak solder (reflow) temperatures. In the event that a part has multiple moisture sensitivity ratings, only the lowest level per JEDEC standards is shown. Refer to the shipping label for the actual reflow temperature that will be used to mount the part to the printed circuit board.

(6) **Part marking:** There may be an additional marking, which relates to the logo, the lot trace code information, or the environmental category of the part.

Multiple part markings will be inside parentheses. Only one part marking contained in parentheses and separated by a "~" will appear on a part. If a line is indented then it is a continuation of the previous line and the two combined represent the entire part marking for that device.

Important Information and Disclaimer: The information provided on this page represents TI's knowledge and belief as of the date that it is provided. TI bases its knowledge and belief on information provided by third parties, and makes no representation or warranty as to the accuracy of such information. Efforts are underway to better integrate information from third parties. TI has taken and continues to take reasonable steps to provide representative and accurate information but may not have conducted destructive testing or chemical analysis on incoming materials and chemicals. TI and TI suppliers consider certain information to be proprietary, and thus CAS numbers and other limited information may not be available for release.

In no event shall TI's liability arising out of such information exceed the total purchase price of the TI part(s) at issue in this document sold by TI to Customer on an annual basis.

TAPE AND REEL INFORMATION

REEL DIMENSIONS

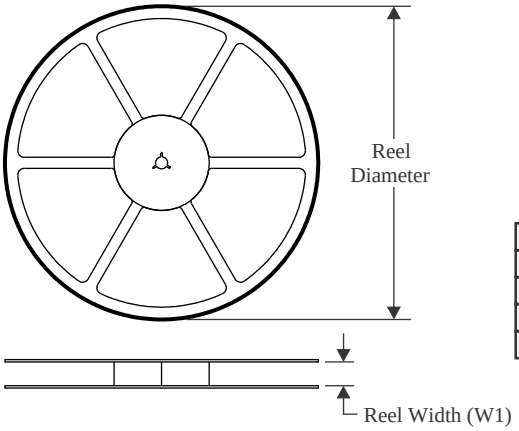

TAPE DIMENSIONS

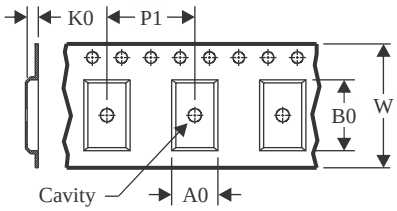

A0	Dimension designed to accommodate the component width
B0	Dimension designed to accommodate the component length
K0	Dimension designed to accommodate the component thickness
W	Overall width of the carrier tape
P1	Pitch between successive cavity centers

QUADRANT ASSIGNMENTS FOR PIN 1 ORIENTATION IN TAPE

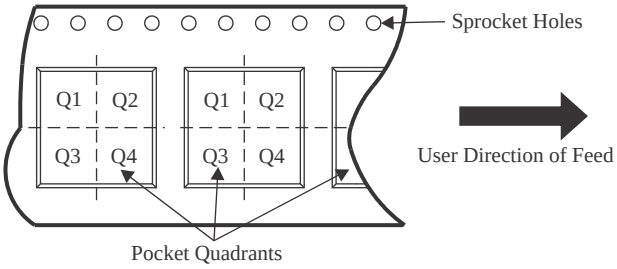

*All dimensions are nominal

Device	Package Type	Package Drawing	Pins	SPQ	Reel Diameter (mm)	Reel Width W1 (mm)	A0 (mm)	B0 (mm)	K0 (mm)	P1 (mm)	W (mm)	Pin1 Quadrant
BQ3055DBTR	TSSOP	DBT	30	2000	330.0	16.4	6.95	8.3	1.6	8.0	16.0	Q1

TAPE AND REEL BOX DIMENSIONS

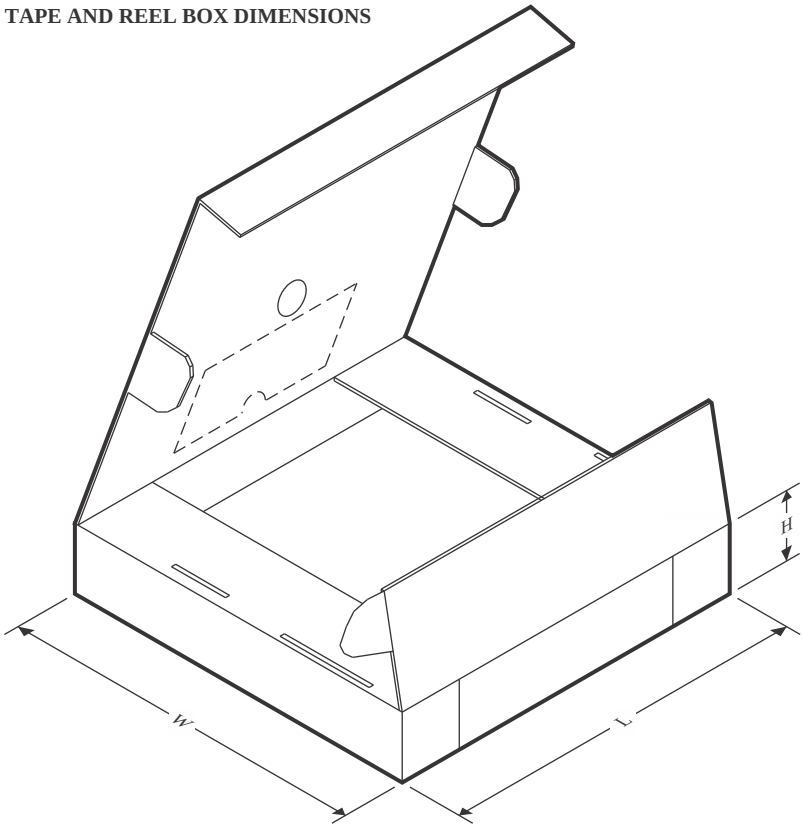

*All dimensions are nominal

Device	Package Type	Package Drawing	Pins	SPQ	Length (mm)	Width (mm)	Height (mm)
BQ3055DBTR	TSSOP	DBT	30	2000	350.0	350.0	43.0

TUBE

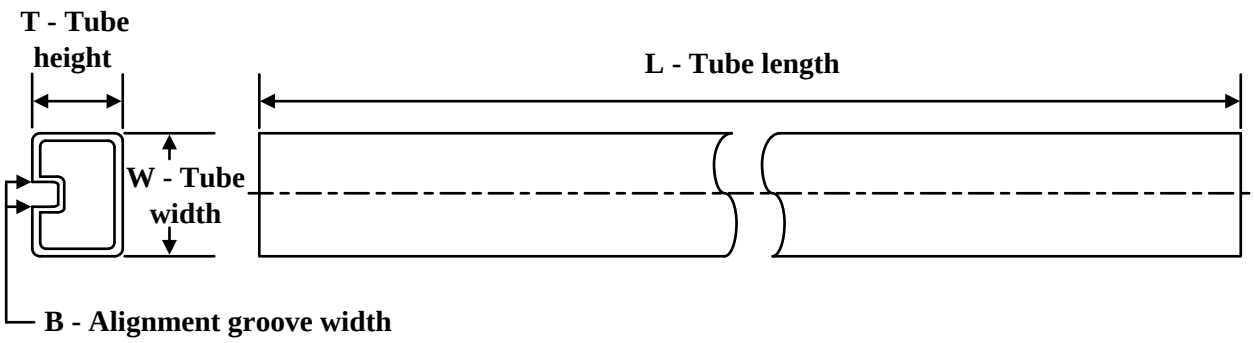

*All dimensions are nominal

Device	Package Name	Package Type	Pins	SPQ	L (mm)	W (mm)	T (µm)	B (mm)
BQ3055DBT	DBT	TSSOP	30	60	530	10.2	3600	3.5
BQ3055DBT	DBT	TSSOP	30	60	530	10.2	3600	3.5
BQ3055DBT.A	DBT	TSSOP	30	60	530	10.2	3600	3.5
BQ3055DBT.A	DBT	TSSOP	30	60	530	10.2	3600	3.5
BQ3055DBT.B	DBT	TSSOP	30	60	530	10.2	3600	3.5
BQ3055DBT.B	DBT	TSSOP	30	60	530	10.2	3600	3.5

DBT0030A

TSSOP - 1.2 mm max height

SMALL OUTLINE PACKAGE

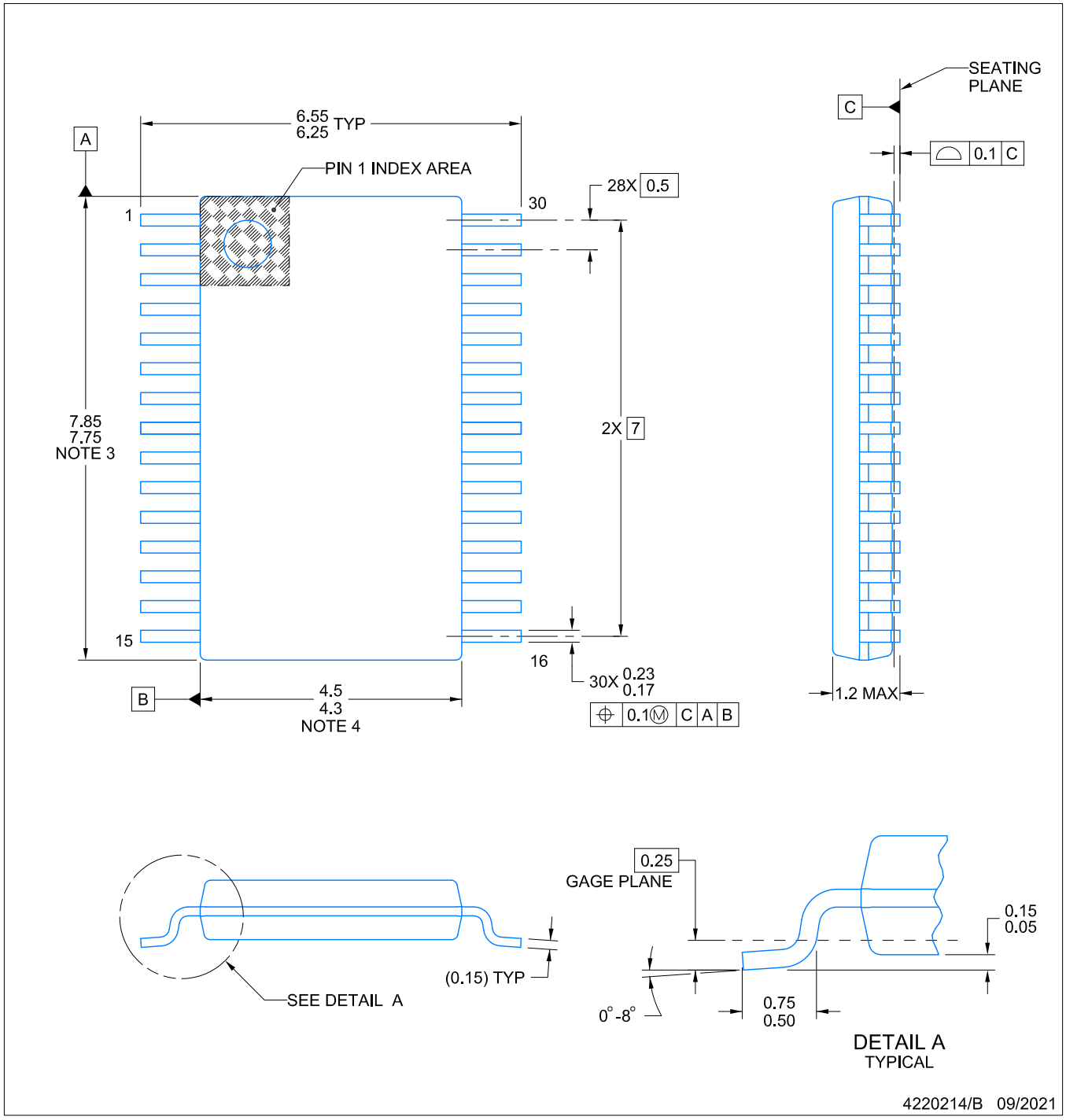

NOTES:

1. All linear dimensions are in millimeters. Any dimensions in parenthesis are for reference only. Dimensioning and tolerancing per ASME Y14.5M.
2. This drawing is subject to change without notice.
3. This dimension does not include mold flash, protrusions, or gate burrs. Mold flash, protrusions, or gate burrs shall not exceed 0.15 mm per side.
4. This dimension does not include interlead flash. Interlead flash shall not exceed 0.25 mm per side.
5. Reference JEDEC registration MO-153.

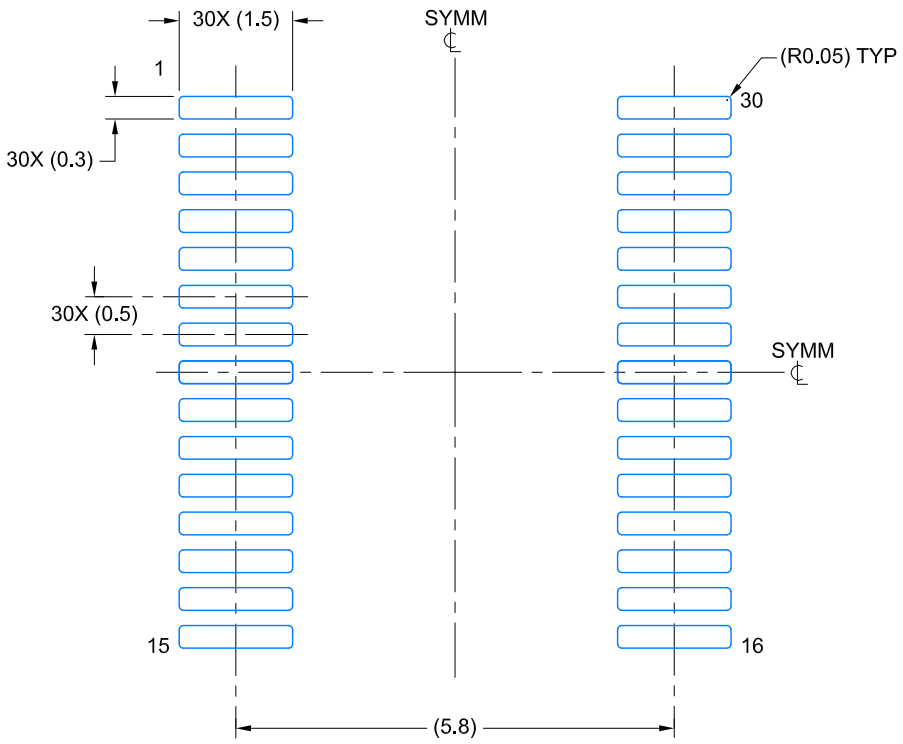

LAND PATTERN EXAMPLE
EXPOSED METAL SHOWN
SCALE: 10X

SOLDER MASK DETAILS

4220214/B 09/2021

NOTES: (continued)

6. Publication IPC-7351 may have alternate designs.
7. Solder mask tolerances between and around signal pads can vary based on board fabrication site.

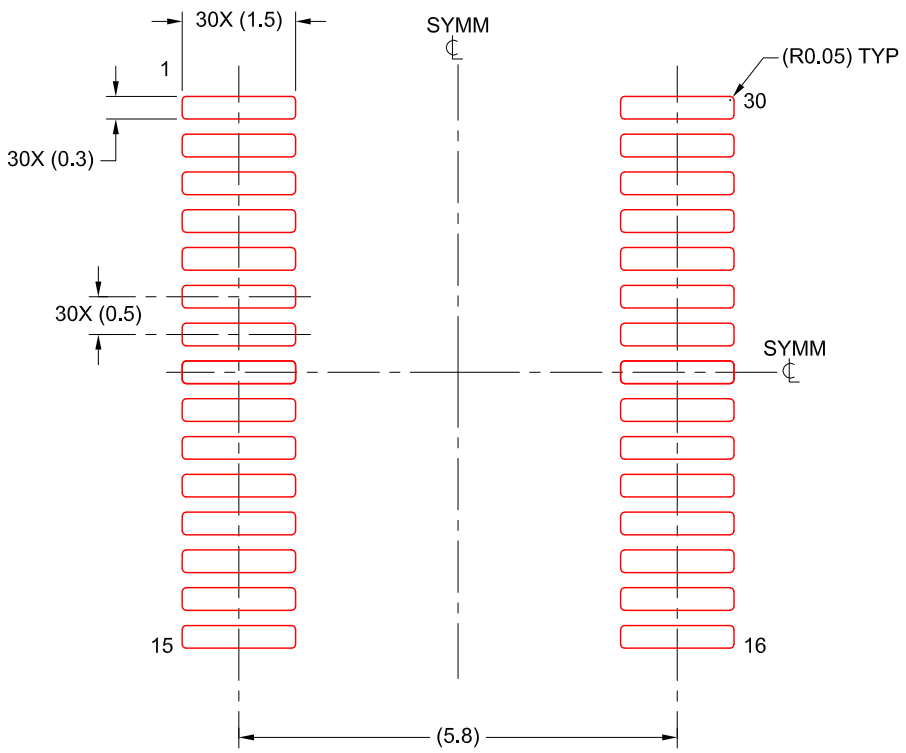

SOLDER PASTE EXAMPLE
BASED ON 0.125 mm THICK STENCIL
SCALE: 10X

4220214/B 09/2021

NOTES: (continued)

8. Laser cutting apertures with trapezoidal walls and rounded corners may offer better paste release. IPC-7525 may have alternate design recommendations.
9. Board assembly site may have different recommendations for stencil design.

IMPORTANT NOTICE AND DISCLAIMER

TI PROVIDES TECHNICAL AND RELIABILITY DATA (INCLUDING DATASHEETS), DESIGN RESOURCES (INCLUDING REFERENCE DESIGNS), APPLICATION OR OTHER DESIGN ADVICE, WEB TOOLS, SAFETY INFORMATION, AND OTHER RESOURCES “AS IS” AND WITH ALL FAULTS, AND DISCLAIMS ALL WARRANTIES, EXPRESS AND IMPLIED, INCLUDING WITHOUT LIMITATION ANY IMPLIED WARRANTIES OF MERCHANTABILITY, FITNESS FOR A PARTICULAR PURPOSE OR NON-INFRINGEMENT OF THIRD PARTY INTELLECTUAL PROPERTY RIGHTS.

These resources are intended for skilled developers designing with TI products. You are solely responsible for (1) selecting the appropriate TI products for your application, (2) designing, validating and testing your application, and (3) ensuring your application meets applicable standards, and any other safety, security, regulatory or other requirements.

These resources are subject to change without notice. TI grants you permission to use these resources only for development of an application that uses the TI products described in the resource. Other reproduction and display of these resources is prohibited. No license is granted to any other TI intellectual property right or to any third party intellectual property right. TI disclaims responsibility for, and you fully indemnify TI and its representatives against any claims, damages, costs, losses, and liabilities arising out of your use of these resources.

TI’s products are provided subject to TI’s Terms of Sale, TI’s General Quality Guidelines, or other applicable terms available either on ti.com or provided in conjunction with such TI products. TI’s provision of these resources does not expand or otherwise alter TI’s applicable warranties or warranty disclaimers for TI products. Unless TI explicitly designates a product as custom or customer-specified, TI products are standard, catalog, general purpose devices.

TI objects to and rejects any additional or different terms you may propose.

Copyright © 2026, Texas Instruments Incorporated

Last updated 10/2025