ANL non-time-delay low voltage limiter

RoHS



Catalog numbers (amps)		
ANL-35	ANL-150	ANL-350
ANL-40	ANL-175	ANL-400
ANL-50	ANL-200	ANL-500
ANL-60	ANL-225	ANL-600
ANL-80	ANL-250	ANL-675
ANL-100	ANL-275	ANL-750
ANL-125	ANL-300	
ANL-130	ANL-325	

Dimensions - in (mm):

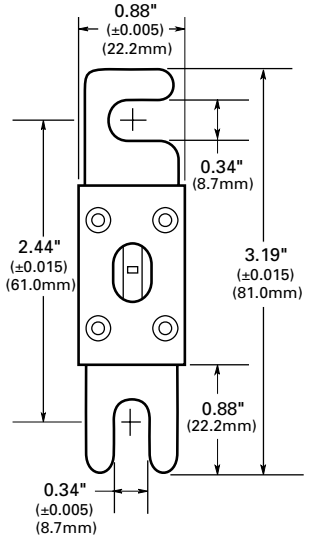

Catalog symbol:

- ANL-(amp)

Description:

Non-time-delay low voltage limiter for use in isolating faults in battery operated systems.

Specifications:

Ratings

- Volts 80Vdc or less
- Amps 35-750A
- IR 2700A

Agency information

- UL Recognized, Guide JFHR2, File E56412
- SAE J1171 ignition protected (35-500A)
- RoHS compliant

Features:

- Element visible through clear window to easily identify open status

Recommended fuse blocks*:

Description	Catalog number
1-pole open stud terminal block with nylon inserted locknuts	4164
1-pole open stud terminal block with standard hex nuts	4164-FR

* Blocks rated to 80Vdc and 800 amps.

Size

- 3.38" long, 09.5" wide, 1.62" tall

Stud centers

- 2.43"

Powering Business Worldwide

Time-current curves – average melt:

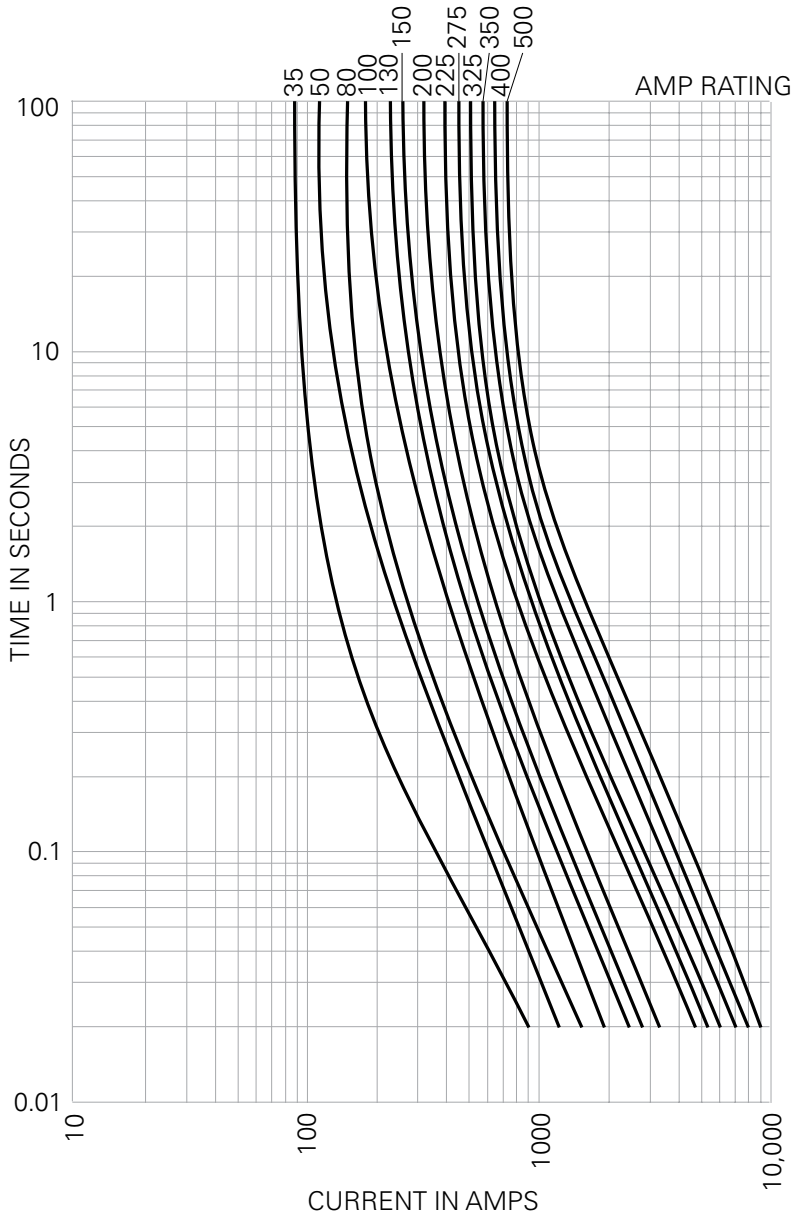

The only controlled copy of this data sheet is the electronic read-only version located on the Eaton network drive. All other copies of this document are by definition uncontrolled. This bulletin is intended to clearly present comprehensive product data and provide technical information that will help the end user with design applications. Eaton reserves the right, without notice, to change design or construction of any products and to discontinue or limit distribution of any products. Eaton also reserves the right to change or update, without notice, any technical information contained in this bulletin. Once a product has been selected, it should be tested by the user in all possible applications.

Eaton
1000 Eaton Boulevard
Cleveland, OH 44122
Eaton.com

Bussmann Division
114 Old State Road
Ellisville, MO 63021
United States
Eaton.com/bussmannseries

© 2015 Eaton
All Rights Reserved
Printed in USA
Publication No. 2024 — BU-MC15053
December 2015

Eaton and Bussmann are valuable trademarks of Eaton in the U.S. and other countries. You are not permitted to use the Eaton trademarks without prior written consent of Eaton.

UL is a registered trademark of the Underwriters Laboratories, Inc.

For Eaton's Bussmann series product information, call **1-855-287-7626** or visit: **Eaton.com/bussmannseries**

Follow us on social media to get the latest product and support information.

Powering Business Worldwide