NOTES:
1. MATERIALS AND FINISHES:
   BODY - STAINLESS STEEL, GOLD PLATING
   CONTACT -BeCu, GOLD PLATING
   INSULATOR - PTFE
2. ELECTRICAL:
   A. IMPEDANCE: 50 OHM
   B. DIELECTRIC WITHSTANDING VOLTAGE: 1500 VRMS, MIN.
3. MECHANICAL:
   A. DURABILITY: 500 CYCLES MIN.
   B. TEMPERATURE RANGE: -65° C TO 165° C
4. PACKAGING:
   A. QUANTITY: SINGLE PACK
   B. MARKING: BAG TO BE MARKED
      "AMPHENOL RF, 901-9209A, AND DATE CODE"

| 901-9209A | REVISIONS | | | | |
|---|---|---|---|---|---|
| DRAWING NO. | REV | DESCRIPTION | DATE | ECO | APPR |
| THIRD ANGLE PROJ. | A | RELEASE TO MFG. | 11/12/76 | 24841 | S.P. |
| | K | REDRAWN IN PRO-E; CHGE NOTE 1; DEL NOTE 2; ADD PLATE CODES; CHGED NOTE 3; .878 WAS .875 | 7/28/98 | 42459 | CPM/ |
| | L | CHANGED PLT ON WASHER; ADDED COD | 12/15/10 | 48366 | CL |

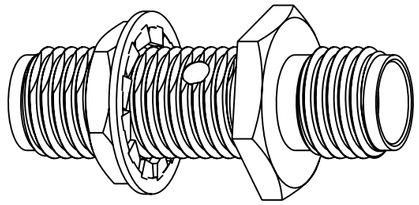

SCALE 3.000

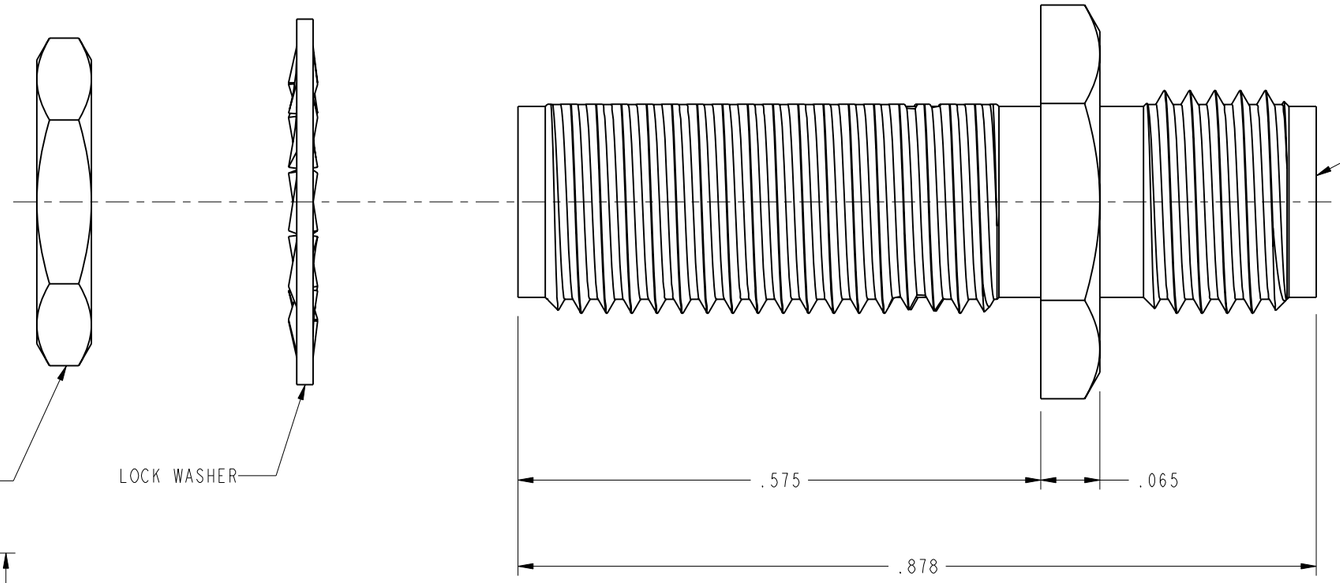


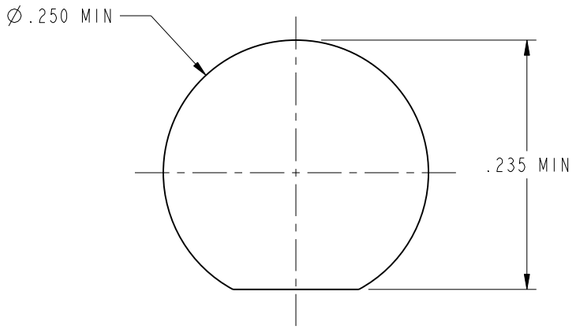


SCALE 7.000

**RECOMMENDED MOUNTING HOLE DIMENSIONS**

# CUSTOMER OUTLINE DRAWING

ALL OTHER SHEETS ARE FOR INTERNAL USE ONLY

UNLESS OTHERWISE SPECIFIED, DIMENSIONS ARE IN INCHES AND TOLERANCES ARE:
2 PLACE DECIMAL ±.015 (0,381 mm) | 3 PLACE DECIMAL ±.005 (0,127 mm) | ANGLES ± 1°

NOTICE - These drawings, specifications, or other data (1) are, and remain the property of Amphenol Corp. (2) must be returned upon request; and (3) are confidential and not to be disclosed to any person other than those to whom they are given by Amphenol Corp. The furnishing of these drawings, specifications, or other data by Amphenol Corp., or to any other person to anyone for any purpose is not to be regarded by implication or otherwise in any manner licensing, granting rights or permitting such holder or any other person to manufacture, use or sell any product, process or design, patented or otherwise, that may in any way be related to or disclosed by said drawings, specifications, or other data.

MATERIAL

REFERENCE
D.O.R. 42-901-315302
GEN # ASSYFI8_SMA

| | | |
|---|---|---|
| DRAWN | CLEMENT | DATE 07-Jul-09 |
| ENGINEER | K. CAPOZZI | DATE 11-29-10 |
| APPROVED | | DATE |

TITLE
SMA
FEED-THRU
ADAPTOR

Amphenol RF
Danbury, CT, USA
Tainan, Taiwan
Shenzhen, China
www.amphenolrf.com

SCALE: 6.0:1 | SHEET 2 OF 2

| CAD FILE | CODE ID | DWG SIZE | DRAWING NO. | REV |
|---|---|---|---|---|
| I:\SMA\901-9209A | 74868 | B | 901-9209A | L |