CC1010

Single Chip Very Low Power RF Transceiver with 8051-Compatible Microcontroller

Applications

- *Very low power UHF wireless data transmitters and receivers*
- *315 / 433 / 868 and 915 MHz ISM/SRD band systems*
- *Home automation and security*
- *AMR – Automatic Meter Reading*
- *RKE – Remote Keyless Entry with acknowledgement*
- *Low power telemetry*
- *Toys*

Product Description

The ***CC1010*** is a true single-chip UHF transceiver with an integrated high performance 8051 microcontroller with 32 kB of Flash program memory. The RF transceiver can be programmed for operation in the 300 – 1000 MHz range, and is designed for very low power wireless applications.

The ***CC1010*** together with a few external passive components constitutes a powerful embedded system with wireless communication capabilities.

CC1010 is based on Chipcon's SmartRF®02 technology in 0.35 μm CMOS.

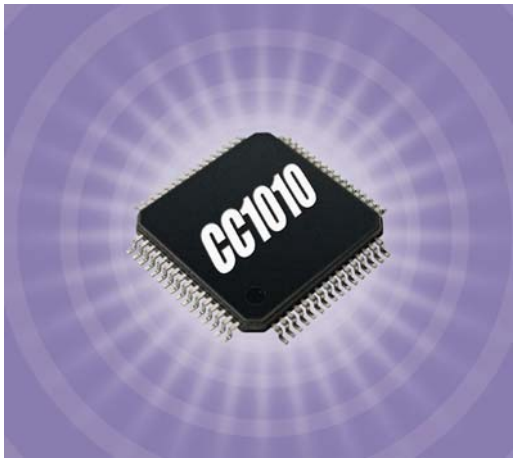

Key Features

- 300-1000 MHz RF Transceiver
  - Very low current consumption (9.1 mA in RX)
  - High sensitivity (typically -107 dBm)
  - Programmable output power up to +10 dBm
  - Data rate up to 76.8 kbps
  - Very few external components
  - Fast PLL settling allowing frequency hopping protocols
  - RSSI
  - EN 300 220 and FCC CFR47 part 15 compliant
- 8051-Compatible Microcontroller
  - Typically 2.5 times the performance of a standard 8051
  - 32 kB Flash, 2048 + 128 Byte SRAM
  - 3 channel 10 bit ADC, 4 timers / 2 PWMs, 2 UARTs, RTC, Watchdog, SPI, DES encryption, 26 general I/O pins
  - In-circuit interactive debugging is supported for the Keil μVision2 IDE through a simple serial interface.
- 2.7 - 3.6 V supply voltage
- 64-lead TQFP

Table Of Contents

1. FEATURES ... 4
2. ABSOLUTE MAXIMUM RATINGS ... 5
3. RECOMMENDED OPERATING CONDITIONS ... 5
4. DC CHARACTERISTICS ... 6
5. ELECTRICAL SPECIFICATIONS ... 7
6. ADC ... 8
7. RF SECTION, GENERAL ... 8
8. RF TRANSMIT SECTION ... 9
9. RF RECEIVE SECTION ... 10
10. IF SECTION ... 11
11. FREQUENCY SYNTHESIZER SECTION ... 12
12. PIN CONFIGURATION ... 13
13. PIN DESCRIPTION ... 15
14. BLOCK DIAGRAM ... 18
15. 8051 CORE ... 19
15.1 GENERAL DESCRIPTION ... 19
15.2 RESET ... 19
15.3 MEMORY MAP ... 20
15.4 CPU REGISTERS ... 23
15.5 INSTRUCTION SET SUMMARY ... 24
15.6 INTERRUPTS ... 28
15.7 EXTERNAL INTERRUPTS ... 32
15.8 MAIN CRYSTAL OSCILLATOR ... 32
15.9 POWER AND CLOCK MODES ... 34
15.10 FLASH PROGRAM MEMORY ... 37
15.11 SPI FLASH PROGRAMMING ... 37
15.12 SERIAL PROGRAMMING ALGORITHM ... 37
15.13 8051 FLASH PROGRAMMING ... 42
15.14 FLASH POWER CONTROL ... 43
15.15 IN CIRCUIT DEBUGGING ... 44
15.16 CHIP VERSION / REVISION ... 45
16. 8051 PERIPHERALS ... 47
16.1 GENERAL PURPOSE I/O ... 47
16.2 TIMER 0 / TIMER 1 ... 52
16.3 TIMER 2 / 3 WITH PWM ... 59
16.4 POWER ON RESET (BROWN-OUT DETECTION) ... 62
16.5 WATCHDOG TIMER ... 63
16.6 REAL-TIME CLOCK ... 65
16.7 SERIAL PORT 0 AND 1 ... 66
16.8 SPI MASTER ... 71
16.9 DES ENCRYPTION / DECRYPTION ... 75
16.10 RANDOM BIT GENERATION ... 78
16.11 ADC ... 79
17. RF TRANSCEIVER ... 83
17.1 GENERAL DESCRIPTION ... 83
17.2 RF TRANSCEIVER BLOCK DIAGRAM ... 83
17.3 RF APPLICATION CIRCUIT ... 85
17.4 TRANSCEIVER CONFIGURATION OVERVIEW ... 88
17.5 RF TRANSCEIVER RX/TX CONTROL AND POWER MANAGEMENT ... 89
17.6 DATA MODEM AND DATA MODES ... 91
17.7 BAUD RATES ... 94
17.8 TRANSMITTING AND RECEIVING DATA ... 95

17.9 DEMODULATION AND DATA DECISION 97
17.10 SYNCHRONIZATION AND PREAMBLE DETECTION 102
17.11 RECEIVER SENSITIVITY VERSUS DATA RATE AND FREQUENCY SEPARATION 105
17.12 FREQUENCY PROGRAMMING 107
17.13 LOCK INDICATION 110
17.14 RECOMMENDED SETTINGS FOR ISM FREQUENCIES 111
17.15 VCO 113
17.16 VCO AND PLL SELF-CALIBRATION 113
17.17 VCO, LNA AND BUFFER CURRENT CONTROL 118
17.18 INPUT / OUTPUT MATCHING 120
17.19 OUTPUT POWER PROGRAMMING 123
17.20 RSSI OUTPUT 126
17.21 IF OUTPUT 127
17.22 OPTIONAL LC FILTER 128
18. RESERVED REGISTERS AND TEST REGISTERS 129
19. SYSTEM CONSIDERATIONS AND GUIDELINES 131
19.1 SRD REGULATIONS 131
19.2 LOW COST SYSTEMS 131
19.3 BATTERY OPERATED SYSTEMS 131
19.4 NARROW-BAND SYSTEMS 131
19.5 HIGH RELIABILITY SYSTEMS 131
19.6 FREQUENCY HOPPING SPREAD SPECTRUM SYSTEMS 132
19.7 SOFTWARE 132
19.8 DEVELOPMENT TOOLS 132
19.9 PA “SPLATTERING” 132
19.10 PCB LAYOUT RECOMMENDATIONS 133
19.11 ANTENNA CONSIDERATIONS 133
20. PACKAGE DESCRIPTION (TQFP-64) 134
21. SOLDERING INFORMATION 134
22. TRAY SPECIFICATION 134
23. LIST OF ABBREVIATIONS 137
24. SFR SUMMARY 138
25. ALPHABETIC REGISTER INDEX 142
26. ORDERING INFORMATION 145
27. GENERAL INFORMATION 146
27.1 DOCUMENT HISTORY 146

1. Features

Fully Integrated UHF RF Transceiver

- Programmable frequency in the range 300 – 1000 MHz
- High sensitivity (typically -107 dBm at 2.4 kBaud)
- Programmable output power –20 to +10 dBm
- Very low current consumption (RX: 9.1 mA)
- Very few external components required and no external RF switch or IF filter required
- Single port antenna connection
- Fast PLL settling allows frequency hopping protocols
- FSK modulation with a data rate of up to 76.8 kBaud
- Manchester or NRZ coding and decoding of data performed in hardware. Byte delineation of data can be performed in hardware to lessen the processor burden
- RSSI output which can be sampled by on-chip ADC
- Complies with EN 300 220 and FCC CFR47 part 15

High-Performance and Low-Power 8051-Compatible Microcontroller

- Optimised 8051-core which typically gives 2.5x the performance of a standard 8051
- Dual data pointers
- Idle and sleep modes
- In-circuit interactive debugging is supported for the Keil µVision IDE through a simple serial interface

Data and Non-volatile Program Memory

- 32 kB of non-volatile Flash memory in-system programmable through a simple SPI interface or by the 8051 core.
- Typical Flash memory endurance: 20 000 write/erase cycles
- Programmable read and write lock of portions of Flash memory for software security
- 2048 + 128 Byte of internal SRAM

Hardware DES Encryption / Decryption

- DES supported in hardware
- Output Feedback Mode or Cipher Feedback Mode DES to avoid the requirement that data length must be a multiple of eight bytes

Peripheral Features

- Power On Reset / Brown-Out Detection
- Three channel, max 23 kSample/s, 10 bit ADC
- Programmable watchdog timer.
- Real time clock with 32 kHz crystal oscillator
- Two timers / pulse counters and two timers / pulse width modulators
- Two programmable serial UARTs.
- Master SPI interface
- 26 configurable general-purpose I/O-pins
- Random bit generator in hardware

Low Power

- 8051 core and peripherals can use the RTC's 32 kHz clock
- Idle and sleep modes for reduced power consumption. System can wake up on interrupt or when ADC input exceeds a set threshold
- Low-power fully static CMOS design

Operating Conditions

- 2.7 - 3.6 V supply voltage
- -40 - 85 °C operational temperature
- 3 - 24 MHz crystal (up to 50 ppm) for the main crystal oscillator

Packaging

- 64-lead TQFP

2. Absolute Maximum Ratings

Under no circumstances must the absolute maximum ratings given in Table 1 be violated. Stress exceeding one or more of the limiting values may cause permanent damage to the device.

Parameter	Min.	Max.	Units	Condition
Supply voltage, VDD	-0.3	5.0	V	
Voltage on any pin	-0.3	VDD+0.3, max 5.0	V	
Input RF level		10	dBm	
Storage temperature range	-50	150	°C	Un-programmed device
Storage temperature range	-40	125	°C	Programmed device, data retention > 0.49 years at 125°C
Lead temperature		260	°C	T = 10 s

Table 1. Absolute Maximum Ratings

Caution! *ESD sensitive device. Precaution should be used when handling the device in order to prevent permanent damage.*

3. Recommended Operating Conditions

Tc = -40 to 85°C, VDD = 2.7 to 3.6 V if nothing else stated

Parameter	Min	Typ	Max	Unit	Condition
Supply voltage, DVDD, AVDD	2.7	3.3	3.6	V	Supply voltage during normal operation
Supply voltage, DVDD, AVDD	2.7		3.6	V	Supply voltage during program/erase Flash memory
Operating temperature, free-air	-40		85	°C	
Main oscillator frequency	3		24	MHz	
RTC oscillator frequency		32768		Hz	

Table 2. Recommended Operating Conditions

4. DC Characteristics

The DC Characteristics of *CC1010* are listed in Table 3 below.

Tc = 25°C, VDD = 3.3 V if nothing else stated

Digital Inputs/Outputs	Min	Max	Unit	Condition
Logic "0" input voltage	0	0.3*VDD	V	
Logic "1" input voltage	0.7*VDD	VDD	V	
Logic "0" output voltage	0	0.4	V	Output current -2.0 mA, ports P0.3-P0.0, P1.7-P1.0, P2.7-P2.4, P2.2-P2.0
Logic "1" output voltage	2.5	VDD	V	Output current 2.0mA, ports P0.3-P0.0, P1.7-P1.0, P2.7-P2.4, P2.2-P2.0
Logic "0" output voltage	0	0.4	V	Output current -8.0 mA, port P2.3
Logic "1" output voltage	2.5	VDD	V	Output current 8.0mA, port P2.3
Logic "0" input current	NA	-1	μA	Input signal equals GND
Logic "1" input current	NA	1	μA	Input signal equals VDD

Table 3. DC Characteristics

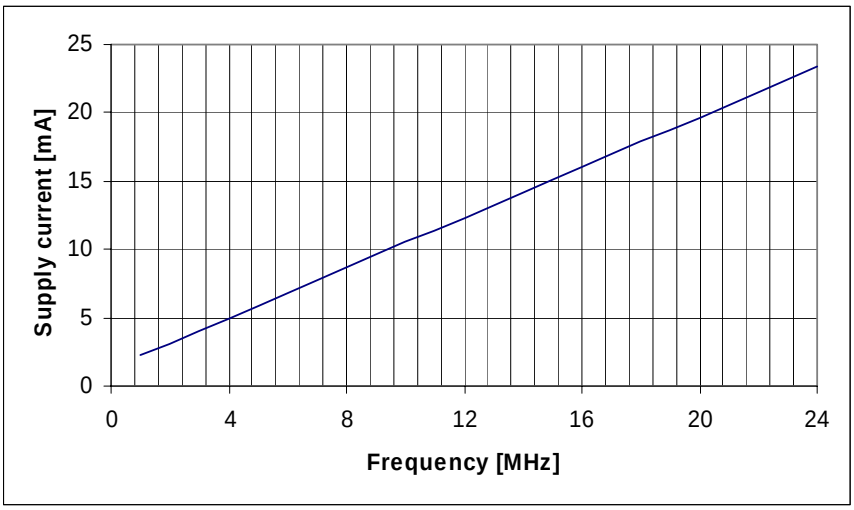

Figure 1. Typical CPU core supply current vs. clock frequency

5. Electrical Specifications

Tc = 25°C, VDD = 3.3 V if nothing else stated

All electrical specifications are measured on Chipcon's CC1010EM reference design.

Parameter	Min.	Typ.	Max.	Unit	Condition
Power on reset (POR) voltage	2.7	2.9	3.1	V	Tc = -40 to 85°C
Brown out voltage	2.7	2.9	3.1	V	Tc = -40 to 85°C
RTC start-up time		160		ms	
Current consumption MCU, Active mode		14.8 1.3		mA mA	14.7456 MHz, main oscillator 32 kHz, RTC oscillator See page 33 for explanation of modes. See Figure 1 page 6 for supply current vs. clock frequency
Current consumption MCU, Idle mode		12.8 29.4		mA µA	14.7456 MHz, main oscillator 32 kHz, RTC oscillator
Current consumption, Power Down mode		0.2	1	µA	
Current consumption, Power-on reset circuit (when enabled)		34		uA	
Current consumption Main crystal oscillator		67		µA	14.7456 MHz crystal
Current consumption RF Transceiver, Receive mode, 433/868 MHz		9.1/ 11.9		mA	Current for RF transceiver alone
Current consumption RF Transceiver, Transmit mode, 433/868 MHz					The output power is delivered to a single-ended 50Ω load, see also page 123. Current is for RF transceiver alone
P=0.01 mW (-20 dBm)		5.3/8.6		mA	
P=0.3 mW (-5 dBm)		8.9/13.8		mA	
P=1 mW (0 dBm)		10.4/17		mA	
P=2.5 mW (4 dBm)		24.8/ 23.5		mA	
P=10 mW (10 dBm)		26.6/NA		mA	
32 kHz oscillator crystal load capacitance		12		pF	

Table 4. Electrical specifications

6. ADC

Parameter	Min.	Typ.	Max.	Unit	Condition
Number of bits		10		bits	
Differential Nonlinearity (DNL)		+/-0.2		LSB	VDD is reference voltage
Integral Nonlinearity (INL)		+/-1.3		LSB	VDD is reference voltage
Offset		3		LSB	7 Hz test tone
Total Harmonic Distortion (THD)		59		dB	7 Hz test tone
SINAD		54 9		dB bits	7 Hz test tone
Internal reference tolerance		± 10		%	
Conversion time	44			µs	When ADC is operated at 250 kHz
Clock frequency	32	250	250	kHz	250 kHz recommended for full 10-bit performance
External reference voltage		1.3	2.7	V	External reference voltage should never exceed 2.7 V. It is recommended to use a reference voltage close to 1.3 V to have the best possible linearity.
Input voltage	0		Vref	V	

Table 5. ADC characteristics

7. RF section, general

Parameter	Min.	Typ.	Max.	Unit	Condition
RF Frequency Range	300		1000	MHz	Programmable in steps of < 250 Hz
Data rate	0.6		76.8	kBaud	NRZ or Manchester encoding. 76.8 kBaud equals 76.8 kbps using NRZ coding. See page 94

Table 6 General RF characteristics

8. RF transmit section

Parameter	Min.	Typ.	Max.	Unit	Condition
Binary FSK frequency separation	0	64	65	kHz	The frequency corresponding to the digital "0" is denoted f_0, while f_1 corresponds to a digital "1". The frequency separation is f_1-f_0. The RF carrier frequency, f_c, is then given by f_c=(f_0+f_1)/2. (The frequency deviation is given by f_d=+/-(f_1-f_0)/2) The frequency separation is programmable in 250 Hz steps. Separations up to 65 kHz are guaranteed at 1 MHz reference frequency. Larger separations can be achieved at higher reference frequencies
Output power 433 / 868 MHz	-20	0	10/4	dBm	Delivered to single-ended 50 Ω load. The output power is programmable, see page 123
RF output impedance 433 / 868 MHz		140/80		Ω	Transmit mode, optimum load impedance. For matching details see “Input/ output matching” p.120
Harmonics 2nd harmonic, 433 / 868 MHz 3rd harmonic, 433 / 868 MHz		 -7/-15 -27/-29		 dBm	Conducted measur at maximum output power. An external LC filter should be used to reduce harmonics emission to comply with SRD requirements. See p.128

Table 7. RF transmit characteristics

9. RF receive section

Parameter	Min.	Typ.	Max.	Unit	Condition
Receiver Sensitivity, 433 / 868 MHz		-107/ -106		dBm	2.4 kBaud, Manchester coded data, 64 kHz frequency separation, BER = 10^{-3} See Table 33 and Table 34page 105 for typical sensitivity figures at other data rates.
System noise bandwidth		30		kHz	2.4 kBaud, Manchester coded data
Cascaded noise figure 433/868 MHz		12/13		dB	
Saturation (maximum input level)	10			dBm	2.4 kBaud, Manchester coded data, BER = 10^{-3}
		-1		dBm	76.8 kBaud NRZ, BER = 10^{-3}
Input IP3		-26		dBm	From LNA to IF output
Blocking		40		dBc	At +/- 1 MHz
LO leakage			-57	dBm	
Input impedance					Receive mode, series equivalent
		90-j13		Ω	at 315 MHz
		68-j24		Ω	at 433 MHz
		36-j11		Ω	at 868 MHz
		36-j13		Ω	at 915 MHz
					For matching details see “Input/ output matching” p. 120.
Turn on time	11		128	Baud	The demodulator settling time, which is programmable, determines the turn-on time. See page 97 for details.

Table 8. RF receive characteristics

10. IF section

Parameter	Min.	Typ.	Max.	Unit	Condition
Intermediate frequency (IF) 433/868 MHz		150/ 130		kHz	Internal IF filter
			10.7	MHz	External IF filter
IF bandwidth (noise bandwidth)		175		kHz	
RSSI dynamic range	-105		-60	dBm	
RSSI 3-dB bandwidth		260		kHz	868 MHz CW, -70 dBm
RSSI accuracy		± 6		dB	See p. 126 for details
RSSI linearity		± 2		dB	

Table 9 IF characteristics

11. Frequency synthesizer section

Parameter	Min.	Typ.	Max.	Unit	Condition
Crystal Oscillator Frequency	3		24	MHz	Crystal frequency can be 3-4, 6-8 or 9-24 MHz. Recommended frequencies are 3.6864, 7.3728, 11.0592, 14.7456, 18.4320 and 22.1184 MHz. See page 32 for details
Crystal frequency accuracy requirement		± 50 ± 25		ppm	433 MHz 868 MHz The crystal frequency accuracy and drift (ageing and temperature dependency) will determine the frequency accuracy of the transmitted signal.
Crystal operation		Parallel			C171 and C181 are loading capacitors
Crystal load capacitance	12 12 12 12	20 16 16 12	30 30 16 16	pF pF pF pF	3-4 MHz, 20 pF recommended 6-8 MHz, 16 pF recommended 9-16 MHz, 16 pF recommended 16-24 MHz, 12 pF recommended
Crystal oscillator start-up time		5 1.5 2		ms ms ms	3.6864 MHz, 16 pF load 7.3728 MHz, 16 pF load 16 MHz, 16 pF load
Output signal phase noise		-85		dBc/Hz	At 100 kHz offset from carrier
PLL lock time (RX / TX turn time)		200		µs	
PLL turn-on time		250		µs	

Table 10. Frequency synthesizer characteristics

12. Pin Configuration

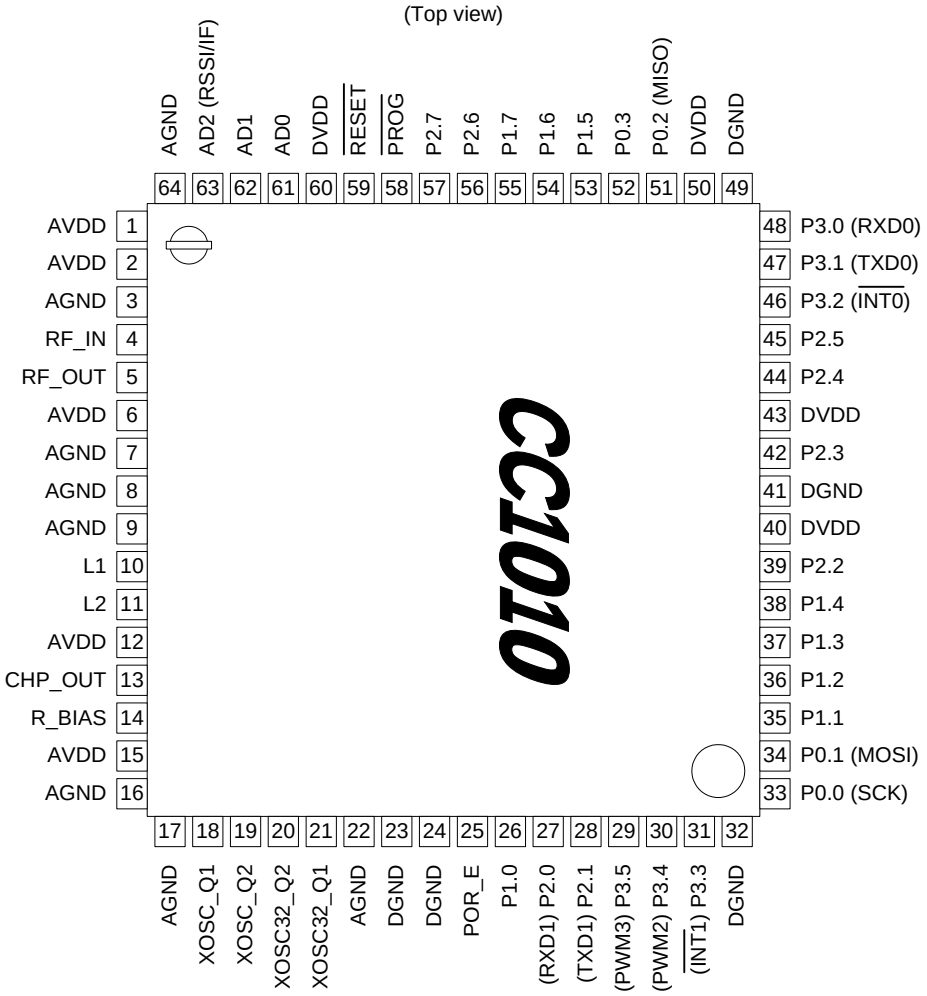

Pin #	Pin name	Alternate function	Pin type	Description
1	AVDD	-	Power (A)	Power supply ADC
2	AVDD	-	Power (A)	Power supply Mixer and IF
3	AGND	-	Power (A)	Ground connection Mixer and IF
4	RF_IN	-	RF input	RF signal input from antenna (external AC-coupling)
5	RF_OUT	-	RF output	RF signal output to antenna
6	AVDD	-	Power (A)	Power supply LNA and PA
7	AGND	-	Power (A)	Ground connection LNA and PA
8	AGND	-	Power (A)	Ground connection PA
9	AGND	-	Power (A)	Ground connection VCO and prescaler
10	L1	-	Analog	Connection #1 for external VCO tank inductor
11	L2	-	Analog	Connection #2 for external VCO tank inductor
12	AVDD	-	Power (A)	Power supply VCO and prescaler

Pin #	Pin name	Alternate function	Pin type	Description
13	CHP_OUT	-	Analog output	Charge pump current output when external loop filter is used
14	R_BIAS	-	Analog	Connection for external precision bias resistor (82 kΩ, ± 1%)
15	AVDD	-	Power (A)	Power supply misc. analog modules
16	AGND	-	Power (A)	Ground connection misc. analog modules
17	AGND	-	Power (A)	Analog ground connection
18	XOSC_Q1	-	Analog input	3-24 MHz crystal, pin 1 or external clock input
19	XOSC_Q2	-	Analog output	3-24 MHz crystal, pin 2
20	XOSC32_Q2	-	Analog output	32 kHz crystal pin2
21	XOSC32_Q1	-	Analog input	32 kHz crystal pin1 or external clock input
22	AGND	-	Power (A)	Analog ground connection
23	DGND	-	Power (D)	Digital ground connection
24	DGND	-	Power (D)	Digital ground connection
25	POR_E	-	Digital input	Power-on reset enable. 0: Disable internal power-on reset module 1: Enable internal power-on reset module
26	P1.0	-	Digital high-Z I/O	8051 port 1, bit 0
27	P2.0	RXD1 (I)	Digital high-Z I/O	8051 port 2, bit 0 or RX of serial port 1
28	P2.1	TXD1 (O)	Digital high-Z I/O	8051 port 2, bit 1 or TX of serial port 1
29	P3.5	PWM3 (O) T1 (I)	Digital high-Z I/O	8051 port 3, bit 5 or pulse width modulator 3's output or Timer / Counter 1 external input
30	P3.4	PWM2 (O) T0 (I)	Digital high-Z I/O	8051 port 3, bit 4 or pulse width modulator 2's output or Timer / Counter 0 external input
31	P3.3	$\overline{\text{INT1}}$ (I)	Digital high-Z I/O	8051 port 3, bit 3 or interrupt 1 input configurable as level or edge sensitive
32	DGND	-	Power (D)	Ground connection digital part
33	P0.0	SCK (O) SCK (I)	Digital high-Z I/O	8051 port 0, bit 0 or SPI master interface serial clock output or Flash programming SPI slave clock input.
34	P0.1	MO (O) SI (I)	Digital high-Z I/O	8051 port 0, bit 1 or SPI interface master output or Flash programming SPI slave serial data input
35	P1.1	-	Digital high-Z I/O	8051 port 1, bit 1
36	P1.2	-	Digital high-Z I/O	8051 port 1, bit 2
37	P1.3	-	Digital high-Z I/O	8051 port 1, bit 3
38	P1.4	-	Digital high-Z I/O	8051 port 1, bit 4
39	P2.2	-	Digital high-Z I/O (Schmitt trigger input)	8051 port 2, bit 2
40	DVDD	-	Power (D)	Digital power supply
41	DGND	-	Power (D)	Ground connection digital part
42	P2.3	-	Digital high-Z I/O (8 mA)	8051 port 2, bit 3
43	DVDD	-	Power (D)	Digital power supply
44	P2.4	-	Digital high-Z I/O	8051 port 2, bit 4
45	P2.5	-	Digital high-Z I/O	8051 port 2, bit 5
46	P3.2	$\overline{\text{INT0}}$ (I)	Digital high-Z I/O	8051 port 3, bit 2 or interrupt 0 input configurable as level or edge sensitive
47	P3.1	TXD0 (O)	Digital high-Z I/O	8051 port 3, bit 1 or TX of serial port 0
48	P3.0	RXD0 (I)	Digital high-Z I/O	8051 port 3, bit 0 or RX of serial port 1
49	DGND	-	Power (D)	Digital ground connection
50	DVDD	-	Power (D)	Digital power supply

Pin #	Pin name	Alternate function	Pin type	Description
51	P0.2	MI (I) SO (O)	Digital high-Z I/O	8051 port 0, bit 2 or SPI interface master input or Flash programming SPI slave serial data output
52	P0.3	-	Digital high-Z I/O	8051 port 0, bit 3
53	P1.5	-	Digital high-Z I/O	8051 port 1, bit 5
54	P1.6	-	Digital high-Z I/O	8051 port 1, bit 6
55	P1.7	-	Digital high-Z I/O	8051 port 1, bit 7
56	P2.6	-	Digital high-Z I/O	8051 port 2, bit 6
57	P2.7	-	Digital high-Z I/O	8051 port 2, bit 7
58	$\overline{\text{PROG}}$	-	Digital input	Flash program enable pad, active low
59	$\overline{\text{RESET}}$	-	Digital input (pull-up)	System reset pin, active low
60	DVDD	-	Power (D)	Digital power supply
61	AD0	-	Analog input	ADC input channel 0
62	AD1	-	Analog input	ADC input channel 1
63	AD2	RSSI (O), IF (O)	Analog input/output	ADC input channel 2, RSSI (Receiver signal strength indicator) output, or IF output when using external demodulator
64	AGND	-	Power (A)	Analog ground connection ADC

A = Analog, D = Digital, I = input, O= Output

13. Pin description

AVDD, DVDD
Supply voltages for analog and digital modules respectively. All supply pins should be decoupled by capacitors. In particular, the digital and analog supply domains should be properly decoupled from each other (a ferrite bead can be used to prevent high-frequency noise from coupling from one supply domain to another). The placement and size of decoupling capacitors and supply filtering are critical with respect to LO leakage and sensitivity. Chipcon's reference layout designs should be used (available from Chipcon's website). See also page 133 for layout recommendations.

AGND, DGND
Ground for analog and digital modules respectively. Normally one common ground plane is recommended. If two separate analog and digital grounds are used they should be interconnected in one place, and one place only.

RFIN
This is the RF input, internally connected to the low noise amplifier (LNA). The signal source (antenna) should be matched to the input impedance. A DC ground is needed for LNA biasing.

RFOUT
This is the RF output, internally connected to the power amplifier (PA). The external load (antenna) should be matched to the output impedance (optimum load impedance). This pin must be DC coupled to AVDD for PA biasing (open drain output).

L1, L2
Connection to internal voltage controlled oscillator (VCO). An inductor should be connected between these pins. The inductor value will determine the VCO tuning range. The inductor should be place very close to the pins in order to minimize paracitic inductance.

CHP_OUT
Charge Pump output. If the RF transceiver is configured for external loop filter this is the current output from the charge pump. Normally the internal loop filter should be used and this pin should be left open (not connected).

RBIAS
Current output from internal band gap cell bias generator. A precision resistor (82 kΩ, ±1%) should be connected between this pin and ground to set the correct bias current level.

XOSC_Q1, XOSC_Q2
These are the main oscillator connection pins. An external crystal should be connected between these pins, and load capacitors should be connected between each pin and ground. If an external oscillator is used, the clock signal should be connected to the XOSC_Q1 pin, and XOSC_Q2 should be left open (not connected).

XOSC32_Q1, XOSC32_Q2
These are the real time clock (RTC) oscillator connection pins. An external crystal should be connected between these pins, and load capacitors should be connected between each pin and ground. If an external oscillator is used, the clock signal should be connected to the XOSC32_Q1 pin, and XOSC32_Q2 should be left open (not connected).

POR_E
Enable signal for the on-chip power-on reset module. The power-on reset is enabled when **POR_E** is connected to **DVDD** and disabled when connected to **DGND**.

$\overline{\text{PROG}}$

Active low Flash programming enable pin. When this signal is active (driven to **DGND**) a Flash programmer can be connected to the SPI interface. Under normal operation it must be driven to **DVDD**.

$\overline{\text{RESET}}$

Active low asynchronous system reset. It has an internal pull-up resistor and can be left unconnected during normal operation.

AD0, AD1
Analog inputs to A/D converter channels 0 and 1 respectively. When not used these pins can be left open (not connected).

AD2 (RSSI/IF)
Analog input to A/D converter channel 2. This pin can also be configured to be RSSI output or IF output. The pin is configured by the **FREND** register. When not used this pin can be left open (not connected).

PORT 0
Port 0 is a 4-bit (**P0.3**-**P0.0**) bi-directional CMOS I/O port with 2 mA drivers. A direction register (**P0DIR**) controls whether each pin is an output or input and the register **P0** is used to read the input or control the logical value of the output.

Pins **P0.0** - **P0.2** can be configured to become a master SPI interface in register **SPCR** and will then override **P0(2:0)**, **P0DIR(2)** and **P0DIR(1)**.

Used as SPI interface, **P0.0** is SCK, **P0.1** is MOSI, and **P0.2** is MISO.

PORT 1
Port 1 is an 8-bit (**P1.7**-**P1.0)** bi-directional CMOS I/O port with 2 mA drivers. A direction register (**P1DIR**) controls whether each pin is an output or input and the register **P1** is used to read the input or control the logical value of the output.

PORT 2
Port 2 is an 8-bit (**P2.7**-**P2.0**) bi-directional CMOS I/O port with 2 mA drivers, except for **P2.3** that has an 8 mA output buffer. A direction register (**P2DIR**) controls whether each pin is an output or input and the register **P2** is used to read the input or control the logical value of the output.

Pins **P2.0** and **P2.1** can be configured to become the RXD1 and TXD1 pin, respectively, of UART 1.

Pin **P2.2** has a Schmitt-trigger input stage. Note that while this pin does have hysteresis, it will draw a large input current (~0.5 mA) if the input voltage is close to VDD/2.

PORT 3
Port 3 is a 6-bit (**P3.5**-**P3.0**) bi-directional CMOS I/O port with 2 mA drivers. A direction register (**P3DIR**) controls whether each pin is an output or input. The register **P3** is used to read the input or control the logical value of the output.

Pins **P3.0** and **P3.1** can be configured to become the RXD0 and TXD0 pin, respectively, of UART 0.

Pins **P3.2** and **P3.3** are connected to the external interrupt inputs **$\overline{\text{INT0}}$** and **$\overline{\text{INT1}}$**, respectively, and can cause interrupts if the corresponding interrupt enable flags are set in register **IE**. The interrupts inputs can be configured to be either level-sensitive or edge-sensitive.

Pins **P3.4** and **P3.5** can be configured to become the pulse width modulator (PWM) outputs of Timer/PWM 2 and Timer/PWM 3, respectively. When pulse width modulation is enabled the corresponding bits in **P3DIR** and **P3** are overridden.

14. Block Diagram

The *CC1010* Block Diagram is shown in Figure 2 below.

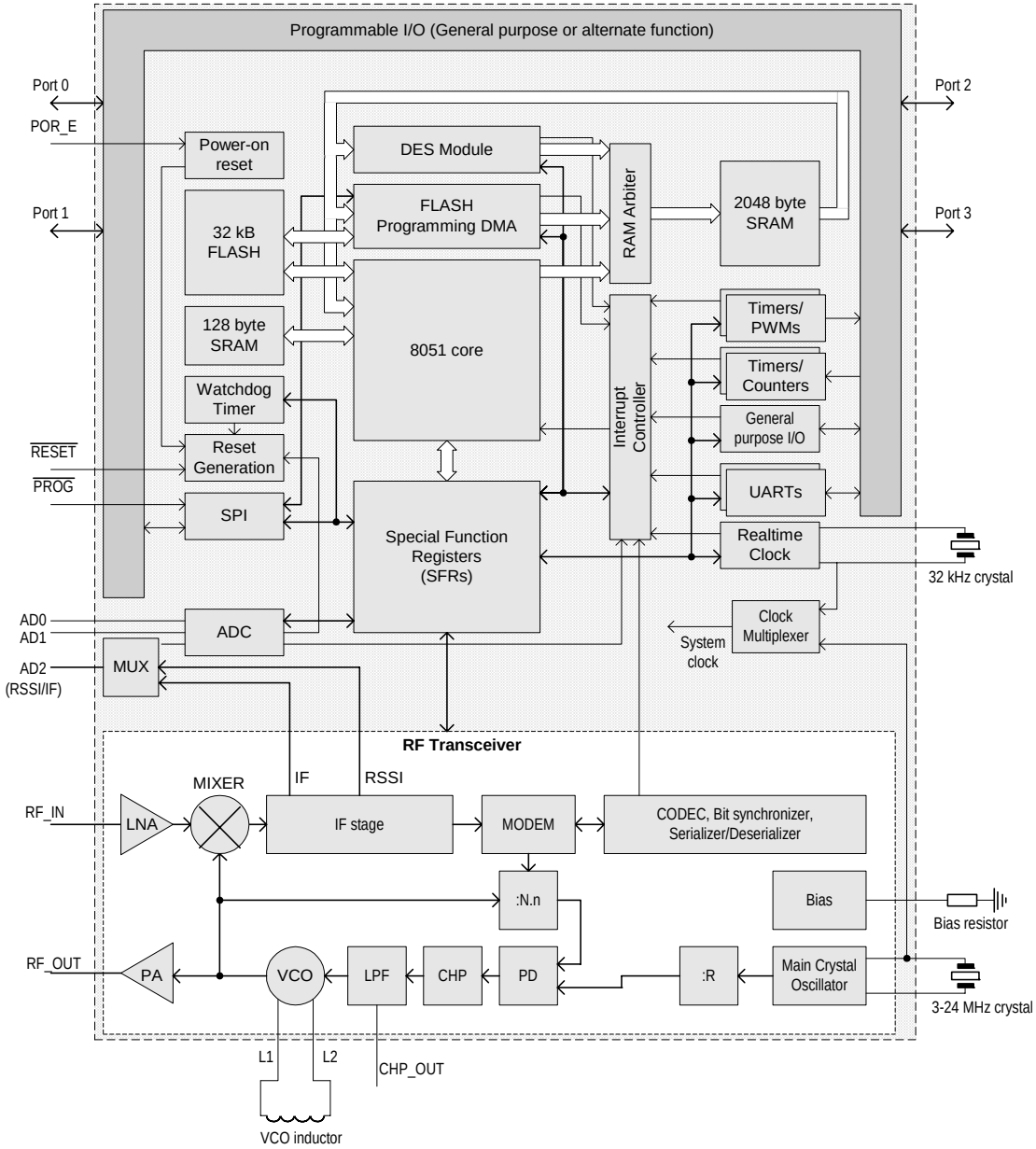

Figure 2. CC1010 Block Diagram

15. 8051 Core

15.1 General description

The *CC1010* microcontroller core is based on the industry-standard 8051 architecture. The MCU core is 8-bit, with program and data memory located in separate memory spaces (Harvard architecture). The internal registers are organised as four banks of 8 registers each. The instruction set supports direct, indirect and register addressing modes. Program memory can be addressed using indexed addressing. The core registers are comprised of an accumulator, a stack pointer and dual data pointer registers in addition to the general registers.

Data memory is split into internal and external RAM. The name "external RAM" is in fact misleading since in the case of the *CC1010* all the RAM is internal to the chip. The difference between external and internal is that external RAM can only be accessed by a few instructions. Therefore, frequently-accessed variables as well as the stack should be kept in internal RAM.

The various peripherals are controlled through Special Function Registers (SFRs) located in the internal RAM space.

The 8051 core is instruction set compatible with the industry standard 8051. It also has one additional instruction, **TRAP**, to enable advanced in-circuit-debugging features. This is described on page 44.

The instruction cycle time is 4 clock cycles, which typically gives a 2.5X average reduction in instruction execution time over the original Intel 8051.

Peripheral units, including general purpose I/O, 2 standard 8051 timers, 2 extra timers with PWM functionality, a watchdog timer, a real-time clock, an SPI master interface, hardware DES encryption, a true random bit generator and ADC are all described from page 47 and out. Dual data pointers are available for faster data transfer.

15.2 Reset

CC1010 must be reset at start-up. There are several sources for reset in *CC1010*:

- External reset pin, $\overline{\text{RESET}}$. Applying a low signal to this pin at any time will reset almost all registers in *CC1010*. Exceptions can be found in Table 40 on page 141. The input is asynchronous and is synchronised internally, so that the reset can be released independent of the timing of the active clock signal. If the main crystal oscillator is inactive, the reset input should be held long enough for the oscillator to start up and stabilize. See Electrical Specifications page 7 for oscillator start-up timing.
- Power On Reset (POR). The internal POR module can generate reset upon power-up. Special requirements for power consumption or power supply voltage may require an external POR module, as described in the Power On Reset (Brown-Out Detection) section at page 62.
- Brown-out detection reset. The POR will also detect low supply voltage and generate a reset.
- Watchdog timer reset. The watchdog timer can generate a reset, as described in the section on page 63.
- ADC reset. The ADC module can be programmed to generate a reset signal if its inputs exceed a programmed threshold. See the ADC section on page 79 for details.

The POR and ADC reset signals will be held for 1024 clock periods after the signal is released. This will ensure a safe clock start-up if the crystal oscillator is currently not running.

15.3 Memory Map

The ***CC1010*** memory map is shown in Figure 3.

CC1010 has 2 blocks of RAM on chip. This includes the 128 bytes Internal RAM and the 2048 bytes External RAM. (The 2048-byte RAM will be referred to as External RAM, although it is on-chip. Direct access to off-chip RAM is not implemented.)

Access to the internal RAM is performed using the `MOV` instruction. `MOV A, @Ri`, `MOV @Ri, A` and `MOV @Ri, #data` use indirect addressing. `MOV A, direct`, `MOV Rn, direct`, `MOV direct, A`, `MOV direct, Rn`, `MOV direct, direct` and `MOV direct, #data` use direct addressing. `MOV @Ri, direct` uses indirect and direct addressing.

All direct addressing instructions can also be used to access the SFRs. ***CC1010*** also implements the option to access SFRs indirectly, as described in the In Circuit Debugging section on page 44. ***CC1010*** has dual data pointers to external RAM, provided in the 16 bit registers **`DPTR0`** and **`DPTR1`** (SFRs **`DPH0`**, **`DPL0`**, **`DPH1`** and **`DPL1`**). If a high-level language compilator is used, it should be set up to make use of both pointers for better performance. The data pointer is selected through **`DPS.SEL`**.

Access to the external RAM is performed using the `MOVX` instruction and indirect addressing using either the 16 bit data pointers or the 8 bit registers `R0` or `R1` together with **`MPAGE`**. `MOVX A, @DPTR` and `MOVX @DPTR, A` moves data to (from) the accumulator, from (to) the address pointed to by the currently selected data pointer.

The instructions `MOVX A, @Ri` and `MOVX @Ri, A` moves data to (from) the accumulator, from (to) the address given by the memory page address register **`MPAGE`** and the register `Ri` (`R0` or `R1`). **`MPAGE`** gives the 8 most significant address bits, while the register `Ri` gives the 8 least significant bits. In many 8051 implementations, this type of external RAM access is performed using **`P2`** to give the most significant address bits. Existing software may therefore have to be adapted to make use of **`MPAGE`** instead of **`P2`**.

The program memory can be read using the `MOVC A, @A+DPTR` and `MOVC A, @A+PC` instructions, which moves a byte from the program memory address given by `A+DPTR` or `A+PC` respectively. The program memory can not be written using `MOV` commands, but uses the method described in the 8051 Flash Programming section on page 42.

CC1010 also provides a possibility to stretch the access cycle to external RAM, through **`CKCON.MD(2:0)`** (see page 55). The default value for **`CKCON.MD`** is "001". It is recommended to set **`CKCON.MD`** to "000" for faster RAM access.

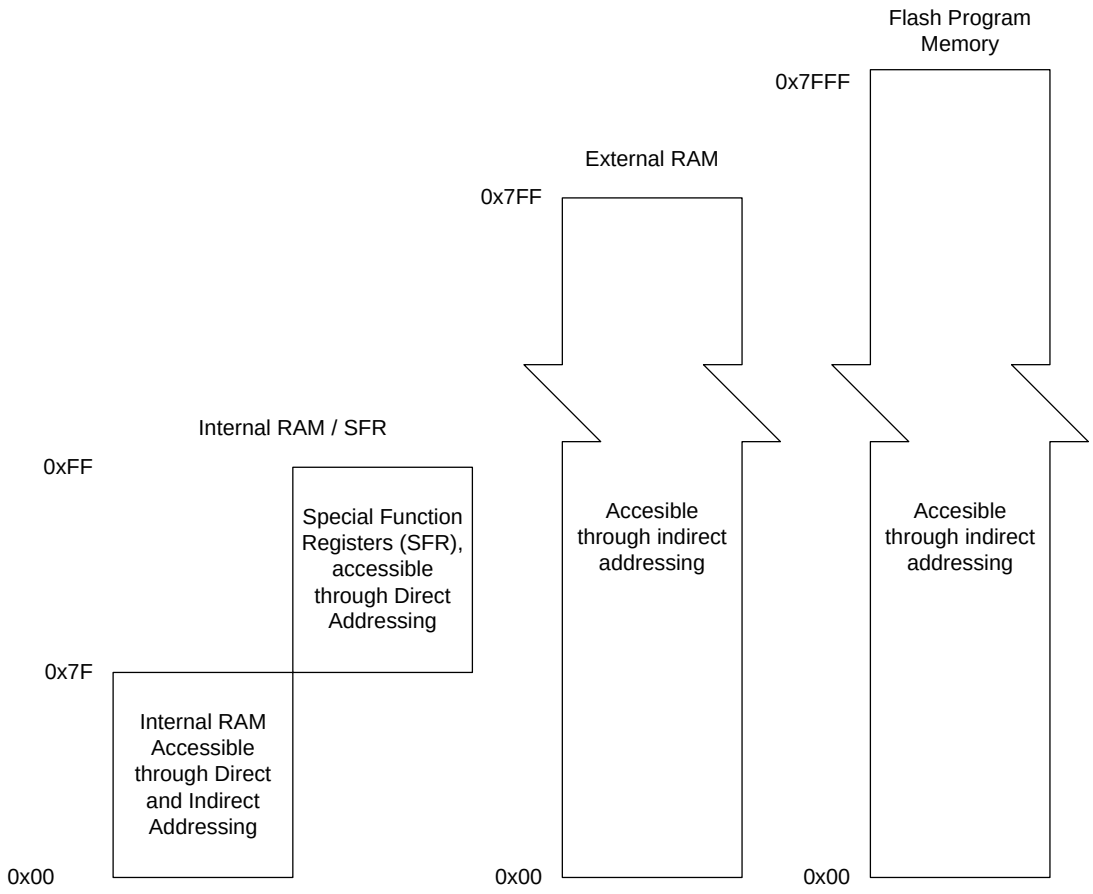

Figure 3. Memory Map

DPL0 (0x82) - Data Pointer 0, low byte

Bit	Name	R/W	Reset value	Description
7:0	**DPL0(7:0)**	R/W	0x00	Data Pointer 0, low byte

DPH0 (0x83) - Data Pointer 0, high byte

Bit	Name	R/W	Reset value	Description
0	**DPH0(7:0)**	R/W	0x00	Data Pointer 0, high byte

DPL1 (0x84) - Data Pointer 1, low byte

Bit	Name	R/W	Reset value	Description
7:0	**DPL1(7:0)**	R/W	0x00	Data Pointer 1, low byte

DPH1 (0x85) - Data Pointer 1, high byte

Bit	Name	R/W	Reset value	Description
7:0	**DPH1(7:0)**	R/W	0x00	Data Pointer 1, high byte

DPS (0x86) - Data Pointer Select

Bit	Name	R/W	Reset value	Description
7:1	-	R0	0x00	Reserved, read as 0
0	SEL	R/W	0x00	Data Pointer Select for external RAM access 0 : **DPH0** and **DPL0** are used 1 : **DPH1** and **DPL1** are used

MPAGE (0x92) - Memory Page Select Register

Bit	Name	R/W	Reset value	Description
7:0	MPAGE(7:0)	R/W	0x00	Memory Page

A total of 119 Special Function Registers (SFRs) are accessible from the microcontroller core. The names and addresses of all SFRs are listed in Table 11. All standard 8051 registers are available, in addition to SFRs which are *CC1010* specific, controlling modules such as the RF Transceiver, DES encryption, ADC and Real-Time Clock.

All SFRs will be described in the following sections. A more detailed overview is provided in Table 40 on page 141, which also includes all reset values. SFRs with addresses ending with 0 or 8 (leftmost column of Table 11) are bit adressable.

	0/8	1/9	2/A	3/B	4/C	5/D	6/E	7/F
0xF8	EIP	TEST0	TEST1	TEST2	TEST3	TEST4	TEST5	TEST6
0xF0	B	FSHAPE7	FSHAPE6	FSHAPE5	FSHAPE4	FSHAPE3	FSHAPE2	FSHAPE1
0xE8	EIE	FSDELAY	FSEP0	FSEP1	FSCTRL	RTCON	FREND	TESTMUX
0xE0	ACC	CURRENT	PA_POW	PLL	LOCK	CAL	PRESCALER	RESERVED
0xD8	EICON	MODEM2	MODEM1	MODEM0	MATCH	FLTIM	-	-
0xD0	PSW	X32CON	WDT	PDET	BSYNC	-	-	-
0xC8	RFMAIN	RFBUF	FREQ_0A	FREQ_1A	FREQ_2A	FREQ_0B	FREQ_1B	FREQ_2B
0xC0	SCON1	SBUF1	RFCON	CRPCON	CRPKEY	CRPDAT	CRPCNT	RANCON
0xB8	IP	RDATA	RADRL	RADRH	CRPINI4	CRPINI5	CRPINI6	CRPINI7
0xB0	P3	-	-	-	CRPINI0	CRPINI1	CRPINI2	CRPINI3
0xA8	IE	TCON2	T2PRE	T3PRE	T2	T3	FLADR	FLCON
0xA0	P2	SPCR	SPDR	SPSR	P0DIR	P1DIR	P2DIR	P3DIR
0x98	SCON0	SBUF0	-	-	-	-	-	CHVER
0x90	P1	EXIF	MPAGE	ADCON	ADDATL	ADDATH	ADCON2	ADTRH
0x88	TCON	TMOD	TL0	TL1	TH0	TH1	CKCON	-
0x80	P0	SP	DPL0	DPH0	DPL1	DPH1	DPS	PCON

Table 11 *CC1010* SFR Overview

15.4 CPU Registers

CC1010 provides 4 register banks of 8 registers each. These register banks are mapped in the the internal data memory (see the Memory section on page 33) at addresses 0x00 - 0x07, 0x08 - 0x0F, 0x10 - 0x17 and 0x18 - 0x1F. Each register bank contains the 8 8-bit registers `R0` through `R7`. The different register banks are selected through the Program Status Word **`PSW.RS(1:0)`** as shown below. **`PSW`** also contains carry, overflow and parity flags that reflect the current CPU state.

In addition, the CPU uses the accumulator register **`A`** (accessed via the SFR space as **`ACC`**), **`B`** (for multiplication and division) and the stack pointer **`SP`**. These registers are shown below. Note that the hardware stack pointer **`SP`** is increased when pushing and decreased when popping data, unlike many other microcontroller architectures.

PSW (0xD0) - Program Status Word

Bit	Name	R/W	Reset value	Description
7	**`CY`**	R/W	0	Carry Flag, set to 1 when the last arithmetic operation resulted in a carry (during addition) or borrow (during subtraction), otherwise cleared to 0 by all arithmetic operations. **`CY`** is also used for rotation instructions.
6	**`AC`**	R/W	0	Auxiliary carry flag. Set to 1 when the last arithmetic operation resulted in a carry into (during addition) or borrow from (during subtraction) the high order nibble, otherwise cleared to 0 by all arithmetic operations.
5	**`F0`**	R/W	0	Flag 0 (Available to the user for general purpose)
4	**`RS1`**	R/W	0	Register bank select. **`RS1`** **`RS0`** Working register bank and address 0 0 Bank0 0x00-0x07 0 1 Bank1 0x08-0x0F 1 0 Bank2 0x10-0x17 1 1 Bank3 0x18-0x1F
3	**`RS0`**	R/W	0	
2	**`OV`**	R/W	0	Overflow flag. Set to 1 when the last arithmetic operation resulted in a carry (addition), borrow (subtraction), or overflow (multiply or divide). Otherwise, the bit cleared to 0 by all arithmetic operations.
1	**`F1`**	R/W	0	Flag 1 (Available to the user for general purpose)
0	**`P`**	R/W	0	Parity flag. Set to 1 when the modulo-2 sum of the 8 bits in the accumulator is 1 (odd parity), cleared to 0 on even parity.

ACC (0xE0) - Accumulator Register

Bit	Name	R/W	Reset value	Description
7:0	**`ACC(7:0)`**	R/W	0x00	Accumulator

B (0xF0) - B Register

Bit	Name	R/W	Reset value	Description
7:0	**`B(7:0)`**	R/W	0x00	**`B`** is used for multiplication and division

SP (0x81) - Stack Pointer

Bit	Name	R/W	Reset value	Description
7:0	**SP(7:0)**	R/W	0x07	Stack Pointer, used for pushing and poping data to and from the stack. Note that the reset value for **SP** is 0x07

15.5 Instruction Set Summary

The 8051 instruction set is summarised in Table 12 below. All mnemonics are Copyright © Intel Corporation 1980.

One non-standard 8051 instruction, TRAP, with opcode 0xA5 is included to enable setting of breakpoints. This instruction is described in the In Circuit Debugging section at page 44. Symbols used in the table are:

- A - Accumulator
- AB - Register pair A and B
- B - Multiplication register
- C - Carry flag
- DPTR - Data pointer
- Rn - Register R0 - R7
- PC - Program counter
- direct - 8-bit data address (Internal RAM 0x00 - 0x7F, SFRs 0x80-0xFF)
- @Ri - Internal register pointed to by R0 or R1 (except MOVX)
- rel - Two's complement offset byte used by SJMP and conditional jumps
- bit - Direct bit address
- #data - 8-bit constant
- #data 16 - 16-bit constant
- addr 16 - 16-bit destination address
- addr 11 - 11-bit destination address, used by ACALL and AJMP. The branch will be within the same 2 kB block of program memory of the first byte of the following instruction.

The 'Bytes' column shows the number of bytes of Flash memory used. Further, the number of instruction cycles is shown. Each instruction cycle requires four clock cycles. The 4 rightmost columns shows which flags in the program status word **PSW** (see page 23) are affected by the instructions.

Mnemonic	Description	Bytes	Instr. Cycles	Hex Opcode	CY	AC	OV	P
	Arithmetic							
ADD A, Rn	Add register to A	1	1	28-2F	x	x	x	x
ADD A, direct	Add direct byte to A	2	2	25	x	x	x	x
ADD A, @Ri	Add data memory to A	1	1	26-27	x	x	x	x
ADD A, #data	Add immediate to A	2	2	24	x	x	x	x
ADDC A, Rn	Add register to A with carry	1	1	38-3F	x	x	x	x
ADDC A, direct	Add direct byte to A with carry	2	2	35	x	x	x	x
ADDC A, @Ri	Add data memory to A with carry	1	1	36-37	x	x	x	x
ADDC A, #data	Add immediate to A with carry	2	2	34	x	x	x	x
SUBB A, Rn	Subtract register from A with borrow	1	1	98-9F	x	x	x	x
SUBB A, direct	Subtract direct byte from A with borrow	2	2	95	x	x	x	x

Mnemonic	Description	Bytes	Instr. Cycles	Hex Opcode	CY	AC	OV	P
SUBB A, @Ri	Subtract data memory from A with borrow	1	1	96-97	x	x	x	x
SUBB A, #data	Subtract immediate from A with borrow	2	2	94	x	x	x	x
INC A	Increment A	1	1	04				x
INC Rn	Increment register	1	1	08-0F				
INC direct	Increment direct byte	2	2	05				
INC @Ri	Increment data memory	1	1	06-07				
DEC A	Decrement A	1	1	14				x
DEC Rn	Decrement register	1	1	18-1F				
DEC direct	Decrement direct byte	2	2	15				
DEC @Ri	Decrement data memory	1	1	16-17				
INC DPTR	Increment data pointer	1	3	A3				
MUL AB	Multiply A by B	1	5	A4	x		x	x
DIV AB	Divide A by B	1	5	84	x		x	x
DA A	Decimal adjust A	1	1	D4	x			x
Logical								
ANL A, Rn	AND register to A	1	1	58-5F				x
ANL A, direct	AND direct byte to A	2	2	55				x
ANL A, @Ri	AND data memory to A	1	1	56-57				x
ANL A, #data	AND immediate to A	2	2	54				x
ANL direct, A	AND A to direct byte	2	2	52				
ANL direct, #data	AND immediate data to direct byte	3	3	53				
ORL A, Rn	OR register to A	1	1	48-4F				x
ORL A, direct	OR direct byte to A	2	2	45				x
ORL A, @Ri	OR data memory to A	1	1	46-47				x
ORL A, #data	OR immediate to A	2	2	44				x
ORL direct, A	OR A to direct byte	2	2	42				
ORL direct, #data	OR immediate data to direct byte	3	3	43				
XRL A, Rn	Exclusive-OR register to A	1	1	68-6F				x
XRL A, direct	Exclusive-OR direct byte to A	2	2	65				x
XRL A, @Ri	Exclusive-OR data memory to A	1	1	66-67				x
XRL A, #data	Exclusive-OR immediate to A	2	2	64				x
XRL direct, A	Exclusive-OR A to direct byte	2	2	62				
XRL direct, #data	Exclusive-OR immediate to direct byte	3	3	63				
CLR A	Clear A	1	1	E4				x
CPL A	Complement A	1	1	F4				x
SWAP A	Swap nibbles of A	1	1	C4				
RL A	Rotate A left	1	1	23				
RLC A	Rotate A left through carry	1	1	33	x			x
RR A	Rotate A right	1	1	03				
RRC A	Rotate A right through carry	1	1	13	x			x
Data Transfer								
MOV A, Rn	Move register to A	1	1	E8-EF				x
MOV A, direct	Move direct byte to A	2	2	E5				x

Mnemonic	Description	Bytes	Instr. Cycles	Hex Opcode	CY	AC	OV	P
MOV A, @Ri	Move data memory to A	1	1	E6-E7				x
MOV A, #data	Move immediate to A	2	2	74				x
MOV Rn, A	Move A to register	1	1	F8-FF				
MOV Rn, direct	Move direct byte to register	2	2	A8-AF				
MOV Rn, #data	Move immediate to register	2	2	78-7F				
MOV direct, A	Move A to direct byte	2	2	F5				
MOV direct, Rn	Move register to direct byte	2	2	88-8F				
MOV direct, direct	Move direct byte to direct byte	3	3	85				
MOV direct, @Ri	Move data memory to direct byte	2	2	86-87				
MOV direct, #data	Move immediate to direct byte	3	3	75				
MOV @Ri, A	MOV A to data memory	1	1	F6-F7				
MOV @Ri, direct	Move direct byte to data memory	2	2	A6-A7				
MOV @Ri, #data	Move immediate to data memory	2	2	76-77				
MOV DPTR, #data	Move immediate to data pointer	3	3	90				
MOVC A, @A+DPTR	Move code byte relative DPTR to A	1	3	93				x
MOVC A, @A+PC	Move code byte relative PC to A	1	3	83				x
MOVX A, @Ri	Move external data (A8) to A	1	2-9	E2-E3				x
MOVX A, @DPTR	Move external data (A16) to A	1	2-9	E0				x
MOVX @Ri, A	Move A to external data (A8)	1	2-9	F2-F3				
MOVX @DPTR, A	Move A to external data (A16)	1	2-9	F0				
PUSH direct	Push direct byte onto stack	2	2	C0				
POP direct	Pop direct byte from stack	2	2	D0				
XCH A, Rn	Exchange A and register	1	1	C8-CF				x
XCH A, direct	Exchange A and direct byte	2	2	C5				x
XCH A, @Ri	Exchange A and data memory	1	1	C6-C7				x
XCHD A, @Ri	Exchange A and data memory nibble	1	1	D6-D7				x
Boolean								
CLR C	Clear carry	1	1	C3	x			
CLR bit	Clear direct bit	2	2	C2				
SETB C	Set carry	1	1	D3	x			
SETB bit	Set direct bit	2	2	D2				
CPL C	Complement carry	1	1	B3	x			
CPL bit	Complement direct bit	2	2	B2				
ANL C, bit	AND direct bit to carry	2	2	82	x			
ANL C, /bit	AND direct bit inverse to carry	2	2	B0	x			
ORL C, bit	OR direct bit to carry	2	2	72	x			
ORL C, /bit	OR direct bit inverse to carry	2	2	A0	x			
MOV C, bit	Move direct bit to carry	2	2	A2	x			
MOV bit, C	Move carry to direct bit	2	2	92				

Mnemonic	Description	Bytes	Instr. Cycles	Hex Opcode	CY	AC	OV	P
Branching								
`ACALL addr 11`	Absolute call to subroutine	2	3	11-F1				
`LCALL addr 16`	Long call to subroutine	3	4	12				
`RET`	Return from subroutine	1	4	22				
`RETI`	Return from interrupt	1	4	32				
`AJMP addr 11`	Absolute jump unconditional	2	3	01-E1				
`LJMP addr 16`	Long jump unconditional	3	4	02				
`SJMP rel`	Short jump (relative address)	2	3	80				
`JC rel`	Jump on carry = 1	2	3	40				
`JNC rel`	Jump on carry = 0	2	3	50				
`JB bit, rel`	Jump on direct bit = 1	3	4	20				
`JNB bit, rel`	Jump on direct bit = 0	3	4	30				
`JBC bit, rel`	Jump on direct bit = 1 and clear	3	4	10				
`JMP @A+DPTR`	Jump indirect relative DPTR	1	3	73				
`JZ rel`	Jump on accumulator = 0	2	3	60				
`JNZ rel`	Jump on accumulator /= 0	2	3	70				
`CJNE A, direct, rel`	Compare A and direct, jump relative if not equal	3	4	B5	x			
`CJNE A, #d, rel`	Compare A and immediate, jump relative if not equal	3	4	B4	x			
`CJNE Rn, #d, rel`	Compare reg and immediate, jump relative if not equal	3	4	B8-BF	x			
`CJNE @Ri, #d, rel`	Compare ind and immediate, jump relative if not equal	3	4	B6-B7	x			
`DJNZ Rn, rel`	Decrement register, jump relative if not zero	2	3	D8-DF				
`DJNZ direct, rel`	Decrement direct byte, jump relative if not zero	3	4	D5				
Misc.								
`NOP`	No operation	1	1	00				
`TRAP`	Set **`EICON.FDIF`** = 1, used for breakpoints	1	3	A5				

Table 12. Instruction Set Summary

15.6 Interrupts

In *CC1010* there are a total of 15 interrupt sources, which share 12 interrupt lines. These are all shown in Table 13. Each interrupt's natural priority, interrupt vector, interrupt enable and interrupt flag, is also shown in the table, and will be described below.

Interrupt	Natural Priority	Priority Control	Interrupt Vector	Interrupt Enable	Interrupt Flag
Flash / Debug interrupt	0	-	0x33	**EICON. FDIE**	**EICON. FDIF**
External Interrupt 0	1	**IP.PX0**	0x03	**IE.EX0**	**TCON.IE0** (*)
Timer 0 Interrupt	2	**IP.PT0**	0x0B	**IE.ET0**	**TCON.TF0** (*)
External Interrupt 1	3	**IP.PX1**	0x13	**IE.EX1**	**TCON.IE1** (*)
Timer 1 Interrupt	4	**IP.PT1**	0x1B	**IE.ET1**	**TCON.TF1** (*)
Serial Port 0 Transmit Interrupt	5	**IP.PS0**	0x23	**IE.ES0**	**SCON0.TI_0**
Serial Port 0 Receive Interrupt					**SCON0.RI_0**
Serial Port 1 Transmit Interrupt	6	**IP.PS1**	0x3B	**IE.ES1**	**SCON1.TI_1**
Serial Port 1 Receive Interrupt					**SCON1.TI_1**
RF Transmit / Receive Interrupt	7	**EIP.PRF**	0x43	**EIE.RFIE**	**EXIF.RFIF**
Timer 2 Interrupt	8	**EIP.PT2**	0x4B	**EIE.ET2**	**EXIF.TF2**
ADC Interrupt	9	**EIP.PAD**	0x53	**EIE.ADIE** and **ADCON2. ADCIE**	**EXIF.ADIF** and **ADCON2. ADCIF**
DES Encryption / Decryption Interrupt				**EIE.ADIE** and **CRPCON. CRPIE**	**EXIF.ADIF** and **CRPCON. CRPIF**
Timer 3 Interrupt	10	**EIP.PT3**	0x5B	**EIE.ET3**	**EXIF.TF3**
Realtime Clock Interrupt	11	**EIP.PRTC**	0x63	**EIE.RTCIE**	**EICON.RTCIF**

(*) - Interrupt flag is cleared by hardware.

Table 13. *CC1010* Interrupt overview

15.6.1 Interrupt Masking

IE.EA is the global interrupt enable for all interrupts, except the Flash / Debug interrupt. When **IE.EA** is set, each interrupt is masked by the interrupt enable bits listed in Table 13. When **IE.EA** is cleared, all interrupts are masked, except the Flash / Debug interrupt, which has its own interrupt mask bit, **EICON.FDIE**.

15.6.2 Interrupt Processing

When an enabled interrupt occurs, the CPU jumps to the address of the interrupt service routine (ISR) associated with that interrupt, as shown in Table 13. Most interrupts can also be initiated by setting the associated interrupt flag from software.

CC1010 executes the ISR to completion unless another interrupt set at a higher interrupt level occurs. Each ISR ends with a RETI (return from interrupt) instruction. After executing the RETI, *CC1010* returns to the next instruction that would have been executed if the interrupt had not occurred.

CC1010 always completes the instruction in progress before servicing an interrupt. If the instruction in progress is RETI, or a write access to any of the **IP**, **IE**, **EIP**, or **EIE** SFRs, *CC1010* completes one additional instruction before servicing the interrupt.

IE (0xA8) - Interrupt Enable Register

Bit	Name	R/W	Reset value	Description
7	**EA**	R/W	0	Global Interrupt enable / disable 0 : All interrupts except the Flash / debug interrupt are disabled 1 : Each interrupt is enabled by its individual masking bit
6	**ES1**	R/W	0	Serial Port 1 interrupt enable / disable 0 : Interrupt is disabled 1 : Interrupt is enabled, when also **EA** is set
5	**-**	R/W	0	Reserved for future use
4	**ES0**	R/W	0	Serial Port 0 interrupt enable / disable 0 : Interrupt is disabled 1 : Interrupt is enabled, when also **EA** is set
3	**ET1**	R/W	0	Timer 1 interrupt enable / disable 0 : Interrupt is disabled 1 : Interrupt is enabled, when also **EA** is set
2	**EX1**	R/W	0	External interrupt 1 (from **P3.3**) enable / disable 0 : Interrupt is disabled 1 : Interrupt is enabled, when also **EA** is set
1	**ET0**	R/W	0	Timer 0 interrupt enable / disable 0 : Interrupt is disabled 1 : Interrupt is enabled, when also **EA** is set
0	**EX0**	R/W	0	External interrupt 0 (from **P3.2**) enable / disable 0 : Interrupt is disabled 1 : Interrupt is enabled, when also **EA** is set

EIE (0xE8) - Extended Interrupt Enable Register

Bit	Name	R/W	Reset value	Description
7	**-**	R1	1	Reserved, read as 1
6	**-**	R1	1	Reserved, read as 1
5	**-**	R1	1	Reserved, read as 1
4	**RTCIE**	R/W	0	Realtime Clock interrupt enable / disable 0 : Interrupt is disabled 1 : Interrupt is enabled, when also **EA** is set
3	**ET3**	R/W	0	Timer 3 interrupt enable / disable 0 : Interrupt is disabled 1 : Interrupt is enabled, when also **EA** is set
2	**ADIE**	R/W	0	ADC / DES interrupt enable / disable 0 : Interrupt is disabled 1 : Interrupt is enabled, when also **EA** is set
1	**ET2**	R/W	0	Timer 2 interrupt enable / disable 0 : Interrupt is disabled 1 : Interrupt is enabled, when also **EA** is set
0	**RFIE**	R/W	0	RF Interrupt enable / disable 0 : Interrupt is disabled 1 : Interrupt is enabled, when also **EA** is set

EICON (0xD8) - Extended Interrupt Control

Bit	Name	R/W	Reset value	Description
7	**SMOD1**	R/W	0	Serial Port 1 baud rate doubler enable / disable 0 : Serial Port 1 baud rate is normal 1 : Serial Port 1 baud rate is doubled
6	**-**	R1	1	Reserved, read as 1
5	**FDIE**	R/W	0	Flash / Debug interrupt enable 0 : Interrupt is disabled 1 : Interrupt is enabled (independent of **IE.EA**)
4	**FDIF**	R/W	0	Flash / Debug interrupt flag **FDIF** is set by hardware when an 8051-initiated write to Flash program memory is completed or a TRAP instruction is executed. **FDIF** may also be set by software. **FDIF** must be cleared by software before exiting the ISR.
3	**RTCIF**	R/W	0	Real-time clock interrupt flag **RTCIF** is set by hardware when an interrupt request is generated from the real-time clock. **RTCIF** may also be set by software. **RTCIF** must be cleared by software before exiting the ISR.
2	**-**	R0	0	Reserved, read as 0
1	**-**	R0	0	Reserved, read as 0
0	**-**	R0	0	Reserved, read as 0

EXIF (0x91) - Extended Interrupt Flag

Bit	Name	R/W	Reset value	Description
7	**TF3**	R/W	0	Timer 3 interrupt flag. **TF3** is set by hardware when an interrupt request is generated from Timer 3. **TF3** may also be set by software. **TF3** must be cleared by software before exiting the ISR.
6	**ADIF**	R/W	0	ADC / DES Interrupt flag. **ADIF** is set by hardware when an interrupt request is generated from the ADC block (**ADCON2.ADCIF**) or by the DES Encryption / Decryption block (**CRPCON.CRPIF**). These interrupts must also be enabled by setting **ADCON2.ADCIE** and **CRPCON.CRPIE**. **ADIF** may also be set by software. **ADIF** must be cleared by software before exiting the ISR
5	**TF2**	R/W	0	Timer 2 interrupt flag. **TF2** is set by hardware when an interrupt request is generated from Timer 2. **TF2** may also be set by software. **TF2** must be cleared by software before exiting the ISR
4	**RFIF**	R/W	0	RF Transmit / receive interrupt flag. **RFIF** is set by hardware when an interrupt request is generated from the RF transceiver block. **RFIF** may also be set by software. **RFIF** must be cleared by software before exiting the ISR.
3	**-**	R1	1	Reserved, read as 1
2	**-**	R0	0	Reserved, read as 0
1	**-**	R0	0	Reserved, read as 0
0	**-**	R0	0	Reserved, read as 0

15.6.3 Interrupt Priority

Interrupts are prioritised in two stages: Interrupt level and natural priority. The interrupt level (low, high or highest) takes precedence over the natural priority.

The Flash / Debug Interrupt, if enabled, always has the highest priority and is the only interrupt that can have the highest priority. All other interrupts can be assigned either low or high priority, set by the registers **IP** and **EIP** listed below.

Two interrupts with the same interrupt priority that occur simultaneously are resolved through their natural priority. The natural priority is shown in Table 13. The interrupt having the lowest natural priority will be serviced first.

Once an interrupt is being serviced, only an interrupt of higher priority level can interrupt the service routine of the interrupt currently being serviced.

IP (0xB8) - Interrupt Priority Register

Bit	Name	R/W	Reset value	Description
7	**-**	R1	1	Reserved, read as 1
6	**PS1**	R/W	0	Serial Port 1 interrupt priority control 0 : Interrupt has low priority 1 : Interrupt has high priority
5	**-**	R/W	0	Reserved for future use
4	**PS0**	R/W	0	Serial Port 0 interrupt priority control 0 : Interrupt has low priority 1 : Interrupt has high priority
3	**PT1**	R/W	0	Timer 1 interrupt priority control 0 : Interrupt has low priority 1 : Interrupt has high priority
2	**PX1**	R/W	0	External Interrupt 1 (from **P3.3**) interrupt priority control 0 : Interrupt has low priority 1 : Interrupt has high priority
1	**PT0**	R/W	0	Timer 0 interrupt priority control 0 : Interrupt has low priority 1 : Interrupt has high priority
0	**PX0**	R/W	0	External Interrupt 0 (from **P3.2**) interrupt priority control 0 : Interrupt has low priority 1 : Interrupt has high priority

EIP (0xF8) - Extended Interrupt Priority Register

Bit	Name	R/W	Reset value	Description
7	**-**	R1	1	Reserved, read as 1
6	**-**	R1	1	Reserved, read as 1
5	**-**	R1	1	Reserved, read as 1
4	**PRTC**	R/W	0	Realtime Clock interrupt priority control 0 : Interrupt has low priority 1 : Interrupt has high priority
3	**PT3**	R/W	0	Timer 3 interrupt priority control 0 : Interrupt has low priority 1 : Interrupt has high priority
2	**PAD**	R/W	0	ADC / DES interrupt priority control 0 : Interrupt has low priority 1 : Interrupt has high priority
1	**PT2**	R/W	0	Timer 2 interrupt priority control 0 : Interrupt has low priority 1 : Interrupt has high priority
0	**PRF**	R/W	0	0 : Interrupt has low priority 1 : Interrupt has high priority

15.7 External interrupts

Two external interrupt pins are available in the *CC1010*. They are located on pins **P3.2** and **P3.3**, and can be set up to be either level- or edge sensitive by setting the **IT1** and **IT2** bits in the **TCON** register (see page 54 for more information). When the external interrupts are activated in the **IE** register, any pulse longer than 8 clock cycles will always generate an interrupt.

The *CC1010* will wake up from Idle mode when an external interrupt pin is activated, but the external interrupt pins cannot wake the *CC1010* from Power-Down mode.

15.8 Main Crystal Oscillator

An external clock signal or the main crystal oscillator can be used as main frequency reference and microcontroller clock signal. An external clock signal should be connected to **XOSC_Q1**, while **XOSC_Q2** should be left open.

The microcontroller core and main oscillator will operate at any frequency in the range 3 - 24 MHz. However, the crystal frequency should be in the range 3-4, 6-8 or 9-24 MHz because the crystal frequency is used as reference for the data rate in the RF transceiver part (as well as other internal functions). The following frequencies are recommended as they will provide "standard" data rates: 3.6864, 7.3728, 11.0592, 14.7456, 18.4320 and 22.1184 MHz. The selected crystal frequency range must be set in **MODEM0.XOSC_FREQ(2:0)** in order to get the correct data rate (see page 93).

Using the main crystal oscillator, the crystal must be connected between the pins **XOSC_Q1** and **XOSC_Q2**. The oscillator is designed for parallel mode operation of the crystal. In addition loading capacitors (C171 and C181) for the crystal are required. The loading capacitor values depend on the total load capacitance, C_L, specified for the crystal. The total load capacitance seen between the crystal terminals should equal C_L for the crystal to oscillate at the specified frequency.

$$C_L = \frac{1}{\frac{1}{C_{171}} + \frac{1}{C_{181}}} + C_{parasitic}$$

The parasitic capacitance is constituted by pin input capacitance and PCB stray capacitance. Typically the total parasitic capacitance is 3-5pF. A trimming capacitor may be placed across C171 for initial tuning if necessary.

The crystal oscillator is of an advanced amplitude-regulated type. A high current is used to start up the oscillations. When the amplitude builds up, the current is reduced to what is necessary to maintain a 600 mVpp amplitude. This ensures a fast start-up, keeps the current consumption and the drive level to a minimum and makes the oscillator insensitive to ESR variations. As long as you follow the crystal loading capacitance requirements, do not worry about ESR or drive levels (a typical drive level is 4 µW for 3 MHz).

The main crystal oscillator circuit is shown in Figure 4. Typical component values for different values of C_L are given in Table 14. Recommended load capacitance versus frequency is given in Table 10 on page 12.

The initial tolerance, temperature drift, ageing and load pulling should be carefully specified in order to meet the required frequency accuracy in a certain application. By specifying the *total* expected frequency accuracy in SmartRF® Studio together with data rate and frequency separation, the software will calculate the total bandwidth and compare to the available IF bandwidth. Any contradictions will be reported by the software and a more accurate crystal will be recommended if required.

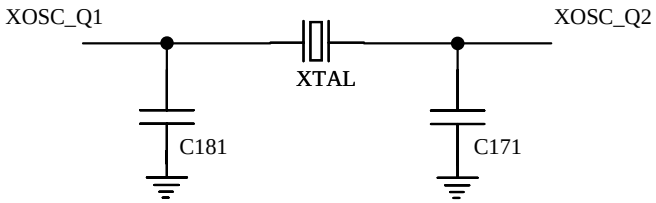

Figure 4. Crystal oscillator circuit

Item	C_L= 12 pF	C_L= 20 pF
C171	15 pF	30 pF
C181	15 pF	30 pF

Table 14. Crystal oscillator component values

15.9 Power and Clock Modes

Several power modes are defined to save power when running ***CC1010***. The modes are described below. See also Table 15.

15.9.1 Active Mode

In active mode the 8051 is running normally, executing instructions from the Flash program memory. The clock used in this mode could either be the main crystal oscillator, or it could be the 32 kHz oscillator. The current consumption depends on the actual frequency used.

15.9.2 Idle Mode

After completing the instruction that sets the **PCON.IDLE** bit, Idle Mode is entered. In Idle Mode, the 8051 processing is stopped and internal registers maintain their current data, but all peripherals are still running.

There are 3 ways to exit Idle Mode:

- Activate any enabled interrupt. This clears the **IDLE** bit, terminating Idle Mode, and executes the ISR associated with the received interrupt. The RETI instruction at the end of the ISR causes the 8051 to return to the instruction following the one that enabled Idle Mode.
- Activate any reset condition. All registers are then reset, and program execution will resume from address 0x0000 when the reset condition is cleared.
- Turn the power off and on. The Power On Reset module should then be enabled, or an external reset signal should be applied during power up.

15.9.3 Power-Down Mode

After completing the instruction that sets the **PCON.STOP** bit, the controller core and the peripherals are stopped. In Power-Down Mode, the clock trees of the 8051 and peripherals are disabled. Only the ADC clock tree is running. This enables the ADC to generate reset as will be described in the ADC section.

Note that the **PCON.STOP** bit does not affect the clock oscillators; these will still be running if they are switched on when entering Power-Down Mode.

To ensure minimum power-consumption, the ADC should be switched off and Power-down mode should be entered by switching off the oscillators instead of using the **PCON.STOP** bit.

There are 2 ways to exit Power Down Mode:

- Activate any reset condition. All registers are then reset, and program execution will resume when the reset condition is cleared. Program execution will then resume from address 0x0000.
- Turn the power off and on. The Power On Reset module should then be enabled, or an external reset signal should be applied during power up.

More information about minimising the power consumption of the CC1010 can be found in Application Note *AN017 Low Power Systems Using The CC1010.*

Mode	Core	Peripherals	Typical current consumption[1]	Exit condition
Active	Main osc.	Main osc.	14.8 mA at 14.7456 MHz	Writing SFR
	RTC osc. (32 kHz)	RTC osc. (32 kHz)	1.3 mA	Writing SFR
Idle	Stopped	Main osc.	12.8 mA at 14.7456 MHz	Interrupt Reset Power off/on
	Stopped	RTC osc. (32 kHz) ADC Off	29.4 uA	
Power-Down	Stopped	ADC On (32 kHz)	200 uA	ADC value exceeds threshold Reset Power off/on
	Stopped	Stopped	0.2 uA	Reset Power off/on

Note 1: Flash duty-cycle reduction is used for all modes

Table 15. Operating modes summary

15.9.4 Clock Modes

The 8051 and its peripherals can be run on both the main crystal oscillator (Clock Mode 0) and the 32.768 kHz oscillator (Clock Mode 1). The clock mode is set in **X32CON.CMODE**.

15.9.5 Entering Clock Mode 1 from Clock Mode 0

After reset, the 8051 and its peripherals are running on the main crystal oscillator, and the 32.768 kHz oscillator is in power down. To enter Clock Mode 1, the 32.768 kHz oscillator must first be powered up. This requires clearing **X32CON.X32_PD** and then waiting at least 160 ms, after which **X32CON.CMODE** can be set to enter Clock Mode 1.

If an external 32.768 kHz clock source is already available in the system, this clock can be applied to the **XOSC32_Q1** pin after setting the **X32CON.X32_BYPASS** bit.

After 2 to 3 clock periods on the 32.768 kHz oscillator, a glitch free transition has been made from the main crystal oscillator to the 32.768 kHz oscillator. If desired, the main crystal oscillator can then be set in power down to save more power by setting **RFMAIN.CORE_PD** and **RFMAIN.BIAS_PD**. This has the disadvantage that a later transition from Clock Mode 1 to Clock Mode 0 will require the main crystal oscillator to be powered up again.

Since the Flash program memory draws a static current, Idle Mode together with Flash Power Control (see page 43) should be applied for maximum power saving in Clock Mode 1.

The RF receiver cannot be activated in Clock Mode 1.

15.9.6 Entering Clock Mode 0 from Clock Mode 1

To enter Clock Mode 0 from Clock Mode 1, the main crystal oscillator must first be set in power up (if powered down). This requires clearing **RFMAIN.CORE_PD** and **RFMAIN.BIAS_PD** and then waiting at least 5 ms (depend on main oscillator frequency, see Electrical Specifications page 7). If the oscillator is already powered up, no waiting is required. Clearing **X32CON.CMODE** will then cause a glitch free transition from Clock Mode 1 to Clock Mode 0 after 2 to 3 clock periods on the main crystal oscillator.

15.9.7 Flash Power Control

The Flash program memory current consumption can be controlled as described in the Flash Power Control section on page 43.

PCON (0x87) - Power Control Register

Bit	Name	R/W	Reset value	Description
7	**SMOD0**	R/W	0	Serial Port 0 baud rate doubler enable. 0 : Serial Port 0 baud rate is not doubled 1 : Serial Port 0 baud rate is doubled
6	**-**	R/W	0	Reserved
5	**-**	R1	1	Reserved, read as 1
4	**-**	R1	1	Reserved, read as 1
3	**GF1**	R/W	0	General purpose flag 1. Bit-addressable, general purpose flag for software control.
2	**GF0**	R/W	0	General purpose flag 0. Bit-addressable, general purpose flag for software control.
1	**STOP**	R/W	0	Power Down (Stop) mode select. Setting the **STOP** bit places *CC1010* core and peripherals in Stop Mode.
0	**IDLE**	R/W	0	Idle mode select. Setting the **IDLE** bit places *CC1010* in Idle Mode (core is stopped but peripherals are running).

X32CON (0xD1) - 32.768 kHz Crystal Oscillator Control Register

Bit	Name	R/W	Reset value	Description
7	**-**	R0	0	Reserved, read as 0
6	**-**	R0	0	Reserved, read as 0
5	**-**	R0	0	Reserved, read as 0
4	**-**	R0	0	Reserved, read as 0
3	**-**	R0	0	Reserved, read as 0
2	**X32_BYPASS**	R/W	0	32.768 kHz oscillator bypass control signal 0 : The internal 32.768 kHz oscillator is used to generate the 32.768kHz clock 1 : The internal 32.768 kHz oscillator is bypassed, and an external clock signal can be applied to the **XOSC32_Q1** pin.
1	**X32_PD**	R/W	1	32.768 kHz oscillator power down signal 0 : The oscillator is powered up 1 : The oscillator is powered down (default after reset)
0	**CMODE**	R/W	0	Select different Clock Modes for the 8051 and its peripherals. 0 : Clock Mode 0 is selected (default after reset) 1 : Clock Mode 1 is selected

15.10 Flash Program Memory

CC1010 has 32 kBytes of on-chip Flash program memory. It is divided into 256 pages of 128 bytes each. It can be programmed / erased through a serial SPI interface or page-by-page from the 8051 as described in the following sections.

The endurance for the Flash program memory is typically 20.000 erase / write cycles.

The Flash program memory can be locked for further reading / writing by setting appropriate lock bits through the serial interface. Chip erase must be performed to unlock the memory. This provides a way to prevent software from being copied by others. It can also prevent parts of the Flash memory from being modified by software, such as a boot loader that should remain unchanged. Other parts of the Flash may still be updated by the boot loader.

For the security of the Flash protection, please refer to the disclaimer at the end of this document.

Erasing a Flash page takes 10-20 ms depending on the **FLTIM** register. Writing to a Flash page takes 5-10 ms.

15.11 SPI Flash Programming

The on-chip Flash program memory can be programmed using the SPI Flash programming protocol described in this section.

SPI Flash programming is enabled when the pin $\overline{\textbf{PROG}}$ is held low. This enables the SPI slave, using the pins **SCK** (**P0.0**) as the clock input, **SI** (**P0.1**) as the serial data input and **SO** (**P0.2**) as the serial data output.

A Windows based Flash programmer is also available free of charge at the Chipcon web site.

15.12 Serial Programming Algorithm

When writing serial data to the SPI interface, data is clocked at the rising edge of **SCK**. When reading data from the SPI interface, data is clocked at the falling edge of **SCK**, see Figure 5.

1. Apply power between V_{DD} and DGND while **SCK** is set to ‘0’. If a crystal is not connected between **XOSC_Q1** and **XOSC_Q2** apply a clock signal to the **XOSC_Q1** pin.
2. Give $\overline{\textbf{RESET}}$ a negative pulse of at least one XOSC period.
3. Set $\overline{\textbf{PROG}}$ low.
4. Send the Programming Enable command. Check that the slave is synchronised by verifying that the second byte of the instruction is echoed back when issuing the third byte. If the second byte did not echo, issue a positive pulse on **SCK** and try again. In the worst case it will take 32 attempts to synchronise.
5. Send the Set Write Cycle Time command according to the device clock oscillator frequency. **c***16*clock period must be between 20-40us for safe flash programming.
6. If a chip erase is performed wait 450ms after the instruction before issuing Write.
7. Flash memory is programmed one page at a time. Each page consists of 128 bytes. Load all bytes of the page that is to be programmed with the Load Program Memory Page instruction.
8. When all bytes of a page has been loaded issue Write Program Memory Page with the page address. The write operation finishes within 5.4ms.

Reading an address while writing will return 0xFF. This can be used for polling

to determine when a page write is finished. When a read instruction returns anything other than $FF all flash write operations have finished.

15.12.1 SPI Flash Programming Instructions

9 instructions are defined to perform the serial Flash programming. These are shown in Table 16.

Instruction	Byte 1	Byte 2	Byte 3	Byte 4	Operation
Programming Enable	1010 1100	0101 0011	xxxx xxxx	xxxx xxxx	Enable serial programming after $\overline{\text{PROG}}$ is set low
Set Flash Timing	1010 1100	0101 1101	xxxx xxxx	xxii iiii	Set the Flash timing register
Chip Erase	1010 1100	100x xxxx	xxxx xxxx	xxxx xxxx	Chip erase. Clears all pages, including the lock bits.
Load Program Memory Page	0100 H000	xxxx xxxx	bbbb bbxx	iiii iiii	Load data **i** to Programming Buffer at address **b:H**
Write Program Memory Page	0100 1100	aaaa aaaa	xxxx xxxx	xxxx xxxx	Write the loaded page at address **a**.
Read Program Memory	0010 H000	aaaa aaaa	bbbb bbxx	oooo oooo	Read data **o** at address **a:b:H**
Write Lock Bits	1010 1100	111x xxxx	xxxx xxxx	iiii iiii	Write Lock Bits. Bits written will be **AND**ed together with the existing lock bits.
Read Lock Bits	0101 1000	xxxx xxxx	xxxx xxxx	oooo oooo	Read lock bits.
Read Signature Byte	0011 0000	xxxx xxxx	xxxx xsss	oooo oooo	Read signature byte **o** at address **s**

a: Page address
b: Even byte address
H: Odd or even (high or low) byte
c: Clock timing bits
s: Signature byte address
i: Input data
o: Output data
x: Don't care

Table 16. SPI Flash Programming Instructions

Each instruction is sent in the order bytes 1 to 4, most significant bits first. All 4 bytes must be sent, even if the last bits are 'x'.

The timing for the SPI interface is shown in Figure 5. All timing parameters are listed in Table 17.

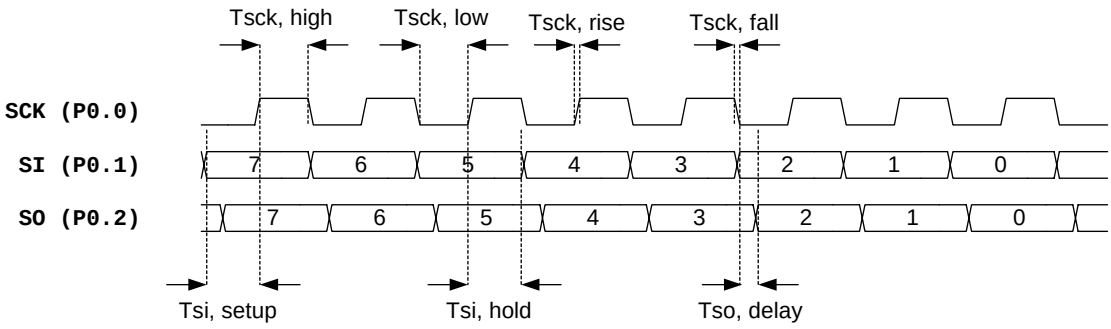

Figure 5. SPI Flash Programming Timing

Symbol	Min	Max	Units	Conditions
Fsck	-	f_{XOSC} / 8		
Tsck, high	$4 \cdot T_{XOSC}$	-		The minimum time **SCK** must be held high
Tsck, low	$4 \cdot T_{XOSC}$	-		The minimum time **SCK** must be held low
Tsck, rise	-	T_{XOSC} /2	ns	The maximum rise time on **SCK**
Tsck, fall	-	T_{XOSC} /2	ns	The maximum fall time on **SCK**
Tsi, setup	T_{XOSC}	-		The minimum setup time for **SI** before the positive edge on **SCK**
Tsi, hold	T_{XOSC}	-		The minimum hold time for **SI** after the positive edge on **SCK**
Tso, delay	-	T_{XOSC}		The delay from the negative edge on **SCK** to valid data on **SO**

Table 17. SPI Flash Programming Timing Parameters

15.12.2 Programming Enable

Programming Enable is always the first instruction to be sent. It must be sent to synchronise the data flow and enable ***CC1010*** to receive further instructions.

Synchronisation is achieved when byte 2 of the instruction (0x53) is echoed back from the SPI interface as byte 3. If synchronisation is not achieved, byte 3 will return all zeros. In this case, an extra clock pulse should be inserted on **SCK**, and the *Programming Enable* instruction should be resent. If synchronisation is not successful within 32 attempts, *Programming Enable* is unsuccessful and further debugging is needed.

15.12.3 Set Flash Timing

The *Set Flash Timing* instruction is needed to generate internal timing for the Flash module. **FLTIM** must be set in instruction byte 4 so that:

$$\frac{f_{XOSC}}{0.8MHz} \leq \textbf{FLTIM} \leq \frac{f_{XOSC}}{0.4MHz}$$

It is recommended to set **FLTIM** to the smallest number satisfying the equation above, to reduce the time needed for Flash programming. For a 3.6864 MHz crystal, **FLTIM** should be set to 5.

15.12.4 Chip Erase

The *Chip Erase* instruction erases all data in the Flash memory, including the lock bits. All bits will be set high.

Wait 450 ms (depending on *Set Flash Timing*) after sending the *Chip Erase* instruction before issuing a new instruction.

15.12.5 Load Program Memory Page

The *Load Program Memory Page* instruction is used to load the 128 bytes of data in a page to a buffer in RAM. Each instruction writes one byte to the 7 bit address specified in the instruction.

15.12.6 Write Program Memory Page

The *Write Program Memory Page* instruction writes the 128 bytes buffered through the *Load Program Memory Page* instructions to Flash memory.

After issuing this command, wait 5.4 ms for it to complete. It is also possible to use the *Read Program Memory* instruction to poll when the program memory has been written. When writing is in progress, all read instructions will return 0xFF. Reading an address containing data different from 0xFF can then be used to check when the write is completed.

15.12.7 Read Program Memory

The Flash program memory can be read back byte by byte using the *Read Program Memory* instruction. The data is returned in byte 4 of the instruction.

Wait at least 9 · T_{XOSC} between the last negative transition on **SCK** for byte 3 before issuing the first positive edge on **SCK** for byte 4 to receive valid data.

15.12.8 Write Lock Bits

The reading (through SPI) and writing to the Flash program memory can be disabled by setting the lock bits as described in this section. This should be used for software protection.

The lock bits are set using the *Write Lock Bits* instruction. A block of programmable size at the top of the Flash program memory can be locked for writing using the **LSIZE** bits. Page 0 can be independently locked for writing by using the **BBLOCK** bit. Reading data through the SPI interface can be disabled using the **SPIRE** bit.

The detailed description of all lock bits is given in Table 18.

Bit	Name	Function
7:3	-	Reserved, write as '0'
4	BBLOCK	Boot Block Lock 0 : Page 0 is write protected 1 : Page 0 is writeable, unless LSIZE is 000
3:1	LSIZE[2:0]	Lock Size, sets the size of the upper Flash area which is write protected. Byte sizes and page numbers are listed below: 000 : 32768 (All pages) 001 : 16384 (page 128-255) 010 : 8192 (page 192-255) 011 : 4096 (page 224-255) 100 : 2048 (page 240-255) 101 : 1024 (page 248-255) 110 : 512 (page 252-255) 111 : 0 (no pages)
0	SPIRE	SPI Read Flash Enable / Disable 0 : SPI Interface returns all zeros on the *Read Program Memory* instruction 1 : SPI Interface returns valid Flash data on the Read Program Memory instruction

Table 18. Flash Lock Bits

Lock bits can only be erased (set high) by issuing the *Chip Erase* instruction. If multiple *Write Lock Bits* instructions are issued without chip erase in between, each lock bit will be AND-ed together with the previously written lock bits.

In effect, this means that *it is not possible to unlock the Flash program memory without also erasing it*.

The effect of the different lock size bits are illustrated in Figure 6.

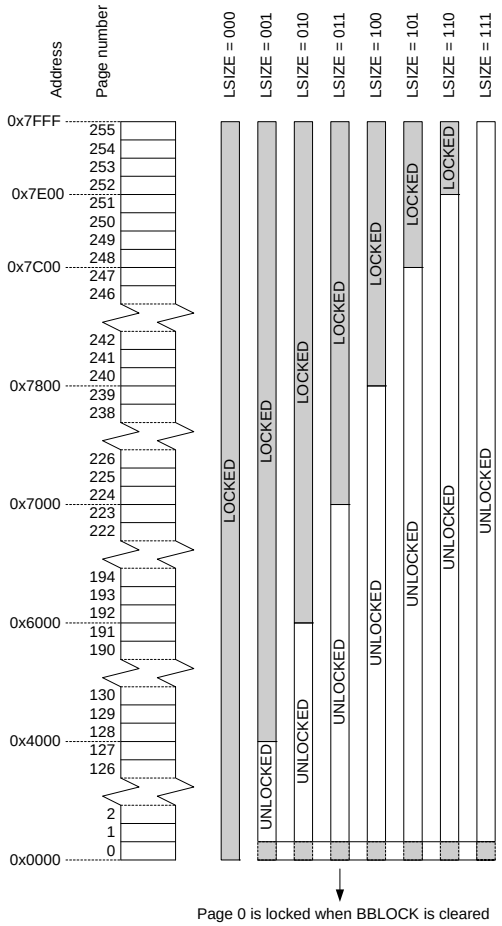

Figure 6. Flash Lock Bits illustration

15.12.9 Read Lock Bits

The lock bits described in the previous section can be read through the SPI interface by using the *Read Lock Bits* instruction. The instruction will return the 8 lock bits in byte 4 of the instruction.

Wait at least 9 · T_{XOSC} between the last negative transition on **SCK** for byte 3 before issuing the first positive edge on **SCK** for byte 4 to receive valid data, as with the *Read Program Memory* instruction.

The lock bits can only be read through the SPI interface, and not from the 8051 core.

15.12.10 Read Signature Byte

A 6 byte chip signature can be read through the SPI interface using the *Read Signature Byte* instruction. The 3 bit signature byte address is issued, and the value is then returned as byte 4.

Signature byte address	Value	Meaing
000	0x7F	JEDEC manufacturer ID, identifies Chipcon AS as the manufacturer.
001	0x7F	
010	0x7F	
011	0x9E	
100	0x95	Identifies 32 kBytes of Flash memory
101	0x00	Identifies ***CC1010***

Table 19. Signature Bytes

Wait at least 9 · T_{XOSC} between the last negative transition on **SCK** for byte 3 before issuing the first positive edge on **SCK** for byte 4 to receive valid data, as with the *Read Program Memory* instruction.

15.12.11 SPI Flash Programming Initialisation

CC1010 must be set into the Flash programming mode to allow SPI Flash operations. This is done as follows:

- Apply power between all **DVDD** and **DGND** pins.
- Hold $\overline{\textbf{PROG}}$ low.
- If a crystal is connected between **XOSC_Q1** and **XOSC_Q2**, hold $\overline{\textbf{RESET}}$ low and wait for the oscillator to start up. Crystal oscillator start-up times are given in Table 10. Release $\overline{\textbf{RESET}}$ and wait at least 4 crystal oscillator periods.
- If a crystal is not connected between **XOSC_Q1** and **XOSC_Q2**, hold $\overline{\textbf{RESET}}$ low and apply a clock signal to **XOSC_Q1**. Release $\overline{\textbf{RESET}}$ after at least 3 clock periods, and then wait at least 4 clock periods.
- Execute the *Programming Enable* instruction to complete the SPI Flash programming Initialisation.

CC1010 is now ready to be programmed, as described in the next section.

15.12.12 Programming the Flash Memory

After the initialisation is completed, SPI programming can be performed as follows:

- Device identity can be verified using the *Read Signature Byte* instruction.
- Perform *Chip Erase*.
- Load one page into the buffer using the *Load Program Memory Page* instruction.
- Write the buffer to Flash by using the *Write Program Memory Page* instruction.
- Repeat the loading and writing of each new page.
- Programming can be verified using the *Read Program Memory* instruction.
- Set the lock bits using the *Write Lock Bits* instruction.
- Lock bits can be verified by using the *Read Lock Bits* instruction.

15.13 8051 Flash Programming

Each of the 256 pages (128 bytes each) in Flash program memory can be programmed individually from the 8051. The 8051 must be set in Idle Mode while programming the Flash, since it has no access to the program memory while the writing is in progress.

The step for writing a page to Flash is described as follows:

- Set the correct write cycle time, according to the current crystal oscillator frequency, in the **`FLTIM`** SFR. This number is used to generate the timing to the on-chip Flash interface, as was also done with SPI Flash programming. It must be set so that:

$$\frac{f_{XOSC}}{0.8MHz} \leq \textbf{FLTIM} \leq \frac{f_{XOSC}}{0.4MHz}$$

- The time used for programming a Flash page is strongly dependent on the setting in **`FLTIM`**. It is therefore recommended to set **`FLTIM`** as low as possible, as with the SPI Flash programming.
- Write the desired Flash page number to the **`FLADR`** register.
- Disable all interrupts except the Flash / Debug interrupt, which must be enabled (through **`EICON.FDIE`**).
- Store the 128 bytes of data to be written in the external data memory. The address of the first byte in the buffer must be a multiple of 128.
- Write the 4 most significant bits of the RAM buffer address to **`FLCON.RMADR(3:0)`**. Also set the bit **`FLCON.WRFLASH.`**
- Set the 8051 in Idle Mode by setting **`PCON.IDLE`**. The Flash page is then automatically erased and programmed.

The sequence of the above steps is not important. Flash programming is started whenever entering Idle Mode while **`FLCON.WRFLASH`** is set.

A Flash / Debug interrupt will be generated when the page write operation is completed, which will get the 8051 out of Idle Mode. An ISR must be present to service the Flash / Debug interrupt.

FLADR (0xAE) - Flash Write Address Register

Bit	Name	R/W	Reset value	Description
7:0	**FLADR(7:0)**	R/W	0x00	The number of of the Flash page to be written (8 MSB of the byte address)

FLCON (0xAF) - Flash Write Control Register

Bit	Name	R/W	Reset value	Description
7	**-**	R0	0	Reserved, read as 0
6:5	**FLASH_LP (1:0)**	R/W	00	Flash Low Power control bits 00 : The Flash module is always active. 01 : The Flash module enters standby mode when the 8051 is put in Idle mode or Stop mode 10 : The Flash module enters standby mode between instruction fetches and when the 8051 is put in Idle Mode or Stop Mode. 11 : Reserved for future use.
4	**WRFLASH**	R/W	0	Write Flash Start bit Starting a Flash page programming is done by first setting this bit and then setting the 8051 in Idle Mode. If the **WRFLASH** bit is cleared before Idle Mode is entered, no programming is performed.
3:0	**RMADR(3:0)**	R/W	0x0	RAM Buffer address **RMADR(3:0)** contains the 4 most significant bits of the RAM address where the data is buffered before writing to Flash

FLTIM (0xDD) - Flash Write Timing Register

Bit	Name	R/W	Reset value	Description
7:0	**FLTIM(7:0)**	R/W	0x0A	Flash Write Timing control **FLTIM** must be set as described in this section prior to using the 8051 Flash programming.

If an attempt is made to write data to a Flash page which is locked (see the previous section), a Flash / Debug interrupt will be generated immediately after Idle Mode is entered. No data will be written.

It is not possible to read or write the Flash lock bits from the 8051.

15.13.1 Example Code

Example C code writing data buffered at address 0x100-0x17F in external RAM to the second page in Flash (address 0x080-0x0FF) is shown below. The system clock frequency is assumed to be 3.6864 MHz.

An interrupt service routine must be present at address 0x33, which clears the interrupt flag **EICON.FDIF** and returns from the interrupt (RETI).

```
FLTIM=0x05;       /* Set Flash timing for 3.6864 MHz clock frequency */
FLADR=0x01;       /* Write data to the second page in Flash */
EICON|=0x20;      /* Enable Flash interrupt */
IE&= ~0x80;       /* Disable other interrupts */
FLCON=0x10 | (0x100 >> 7);
                  /* Enable Flash writing, RAM buffer from addr. 0x100 */
PCON|=0x01;       /* Enter Idle Mode to start Flash writing.
```

15.14 Flash Power Control

The Flash module can be set into different power modes using the control bits **FLCON.FLASH_LP(1:0)** introduced in the previous section.

After reset, the Flash module is always active, drawing a static current of approximately 2.5 mA (at nominal operating conditions). However, to save power the Flash module can be set in a power-down mode between instructions in Active mode, and always in Idle or Power-Down mode. This will save approximately 1.5 mA of the Flash current consumption during operation in Active mode, and 2.5 mA during Idle or Power-Down mode.

15.15 In Circuit Debugging

In order to facilitate a software monitor for in-circuit debugging/emulation capabilities a number of hardware support features have been implemented:

A breakpoint instruction has been added to the 8051's instruction set. The instruction, given the mnemonic TRAP, is a single byte instruction with the opcode 0xA5. In the original 8051 the 0xA5 opcode is executed as a NOP instruction (opcode 0x00.) In the modified core this instruction raises a highest-level interrupt (Flash / Debug) by setting the corresponding interrupt flag **EICON.FDIF** and waiting a sufficient number of instruction cycles to allow the interrupt to take effect before the next instruction.

The TRAP instruction can thus be written over the first byte (opcode) of any other instruction, the execution of which then will result in a branch to a software debugging monitor in the highest priority interrupt service routine.

Single-stepping through instructions is supported since exactly one instruction is executed if an interrupt condition exists when returning from an interrupt service routine. Thus, single-stepping can be accomplished simply by not clearing the corresponding interrupt flag in the interrupt service routine associated with the software monitor.

A second serial port has been added to enable debugging communication with a host PC without disrupting applications that use the main serial port for other purposes.

Setting breakpoints and executing the instructions which have a breakpoint attached involves writing new data to the Flash instruction memory several times. Since the Flash memory can only withstand 20000 (typical) erase/write-cycles a simple instruction replacement mechanism has been implemented. This feature allows the surveillance of an address in the instruction memory space as defined in registers **RADRL** and **RADRH**. When this address is encountered on the Flash program memory address bus, the data returned on the data bus is replaced by the contents of register **RDATA**. Setting **RADRH**=**RADRL**=0 disables the replacement mechanism.

This instruction replacement mechanism can be used in different ways:

- A simple way of setting a single *soft* (not stored in FLASH) breakpoint, by setting **RDATA** to 0xA5 (the TRAP instruction) and **RADR** to the breakpoint address.
- A simple way of restoring the original opcode byte of an instruction which has been subjected to a *hard* (stored in Flash) breakpoint, so that it can be executed (in single-step mode).
- SFRs (hardware registers) can normally only be addressed directly (i.e. by hardwiring the specific address into the corresponding MOV instruction.) This would make code in a debug monitor, which returns the value of SFRs to a PC rather bloated. Using the instruction replacement mechanism on the operand byte of the move instruction instead of the opcode byte, allows indirect addressing of SFRs.

Chipcon provides software for in-circuit debugging, which may be downloaded from the Chipcon homepage. This software uses the **RESERVED** register,

which can then not be used for other purposes. If in-circuit debugging is not required, the **RESERVED** register shown below may be used for any purpose. Writing to it will have no effect on the operation of *CC1010*.

Great caution should be used when the **RADR** is written. Since the address consists of two bytes (**RADRL** and **RADRH**), there will be a short interval where the address is not valid as only one of the bytes are written at a time. If this intermediate address point to the very same location as of the code modifying the RADR, a malfunction will occur. One possible work-around is to first write RADRH to a value pointing to a memory location not used by the code.

RESERVED (0xE7) - Reserved register, used by Chipcon debugger software

Bit	Name	R/W	Reset value	Description
7:0	**RESERVED(7:0)**	R/W	0x00	Reserved register, which is used by Chipcon debugger software. **RESERVED** may be used for other purposes if Chipcon's debugger software is not needed.

RDATA (0xB9) - Replacement Data

Bit	Name	R/W	Reset value	Description
7:0	**RDATA(7:0)**	R/W	0x00	Replacement data. Used to replace the byte at program memory address **RADR** with the data from **RDATA**, if **RADR** > 0.

RADRH (0xBB) - Replacement address, high byte

Bit	Name	R/W	Reset value	Description
7:0	**RADR(15:8)**	R/W	0x00	Replacement address, high byte. Used to replace the byte at program memory address **RADR** with the data from **RDATA**, if **RADR** > 0.

RADRL (0xBA) - Replacement address, low byte

Bit	Name	R/W	Reset value	Description
7:0	**RADR(7:0)**	R/W	0x00	Replacement address, low byte. Used to replace the byte at program memory address **RADR** with the data from **RDATA**, if **RADR** > 0

15.16 Chip Version / Revision

CC1010 has a SFR register **CHVER** that can be read to decide the chip type and current revision. The register description is shown below.

CHVER (0x9F) - Chip Version / Revision Register

Bit	Name	R/W	Reset value	Description
7:2	**CHIP_TYPE**	R	0x00	**CHIP_TYPE** is a read-only status word, which gives the type number of the chip. 000000 : *CC1010* 000001 - 111111 : Reserved for future use
1:0	**CHIP_REV**	R	0x01	**CHIP_REV** is a read only status word, which gives the chip revision number of the chip. Current chip revision is 01

16. 8051 Peripherals

CC1010 offers the following peripherals units controlled by the 8051-compatible core:

- Four general-purpose I/O ports, with 26 I/O pins in total.
- Two standard 8051 timers
- Two timers with PWM functionality
- Watchdog timer
- Real-time clock
- SPI master
- Hardware DES encryption / decryption
- Random bit generator
- 10-bit ADC

These modules are described in the following sections.

16.1 General Purpose I/O

Four general purpose I/O-ports are available: **P0**, **P1**, **P2** and **P3**. Table 20 shows each port and the pins on each port.

Each port is associated with two registers: The port register (**P0**, **P1**, **P2**, or **P3**) and the direction register (**P0DIR**, **P1DIR**, **P2DIR**, or **P3DIR**).

Each bit in the **Px** registers has its associated bit in the direction registers **PxDIR**. Setting **PxDIR.y** will make **Px.y** an input which can be read in **Px(y)**. All pins are inputs after reset. Clearing **PxDIR.y** will make the pin **Px.y** output the data from the register **Px(y)**. All **Px** and **PxDIR** register descriptions are shown from page 49.

The structure for a single I/O-bit y on port x is shown in Figure 7. Some ports have alternate functions (such as the SPI interface), which are enabled through other registers (such as **SPCR.SPE**). These alternate functions may or may not override the direction setting from **PxDIR** as shown.

When reading the **Px** registers, data is read from the directly from the pin. When using a read-modify-write instruction such as
`ANL Px, #0x01`, the output register value is read and modified regardless of the setting in **PxDIR**.

Writing to the **Px** registers writes to the output register, and sets the I/O pin state. Using a read-modify-write operation reads from the output register, modifies the value according to the instruction executed and writes the result back into the output register, modifying the I/O pin state accordingly.

In practice, this means that the `mov` instruction should only be used when writing to all the pins in the port. To modify only a few pins, use a read-modify-write instruction. Also, be careful of using constructs in C or another high-level language that result in a `mov` from the **Px** registers, modify the result and write it back (without using read-modify-write instructions), as this will cause problems if not all I/O pins in the port are configured as outputs. In C, the |=, &= and ^= operators should be used to set, clear and toggle pins respectively.

The *CC1010* ports deviate from the standard 8051-port in the following ways:

- No pull-ups / pull-downs on pins
- Dedicated direction bits in **PxDIR** registers
- CMOS output levels on all ports

All general-purpose I/O pins are rated to sink or source 2 mA, except pin P2.3, which is rated to sink or source 8 mA.

Port	Available pins	Alternate Function	
		Normal operation	Flash Programming
P0	P0.0	SCK, SPI Serial Clock output	SCK, SPI Serial Clock Input
	P0.1	MO, SPI Master Output	SI, SPI Slave Input
	P0.2	MI, SPI Master Input	SO, SPI Slave Output
	P0.3	-	-
P1	P1.0	-	-
	P1.1	-	-
	P1.2	-	-
	P1.3	-	-
	P1.4	-	-
	P1.5	-	-
	P1.6	-	-
	P1.7	-	-
P2	P2.0	RXD1, Serial port 1 input	-
	P2.1	TXD1, Serial port 1 output	-
	P2.2	-	-
	P2.3	-	-
	P2.4	-	-
	P2.5	-	-
	P2.6	-	-
	P2.7	-	-
P3	P3.0	RXD0, Serial port 0 input	-
	P3.1	TXD0, Serial port 0 output	-
	P3.2	$\overline{\text{INT0}}$, External interrupt 0	-
	P3.3	$\overline{\text{INT1}}$, External interrupt 1	-
	P3.4	T0, Counter input 0 to Timer 0, or PWM2, PWM output from Timer 2	-
	P3.5	T1, Counter input 1 to Timer 1, or PWM3, PWM output from Timer 3	-

Table 20. Available I/O-Ports

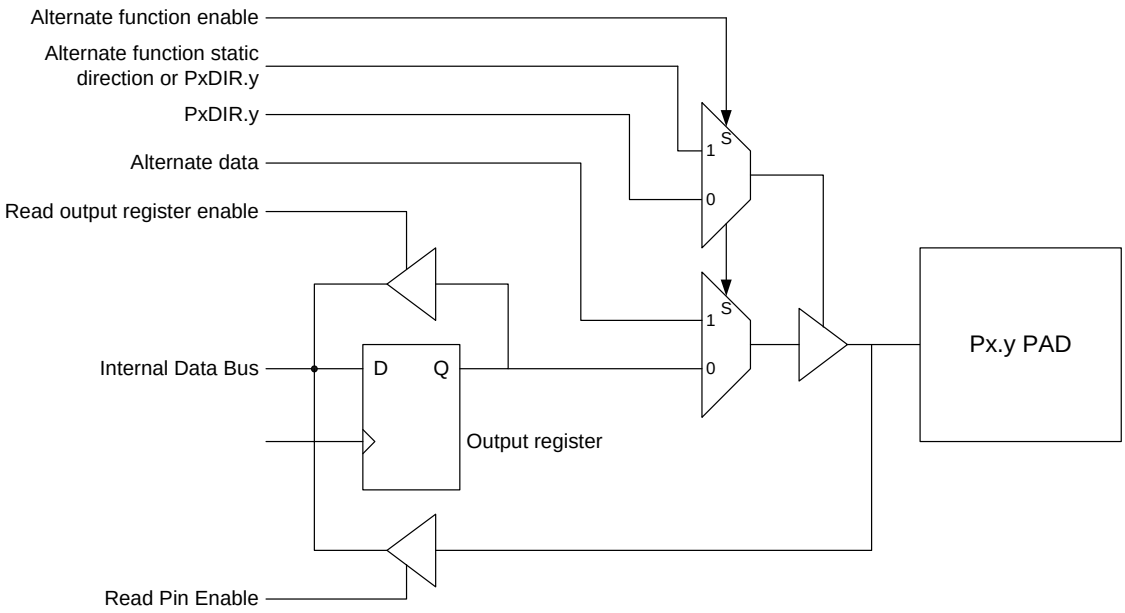

Figure 7. Port x bit y structure

P0 (0x80) - Port 0 Data Register

Bit	Name	R/W	Reset value	Description
7	-	R0	0	Reserved, read as 0
6	-	R0	0	Reserved, read as 0
5	-	R0	0	Reserved, read as 0
4	-	R0	0	Reserved, read as 0
3	P0_3	R/W	1	Data of port 0, bits 0 to 3.
2	P0_2	R/W	1	
1	P0_1	R/W	1	
0	P0_0	R/W	1	

P1 (0x90) - Port 1 Data Register

Bit	Name	R/W	Reset value	Description
7	P1_7	R/W	1	Data of port 1, bits 0 to 7.
6	P1_6	R/W	1	
5	P1_5	R/W	1	
4	P1_4	R/W	1	
3	P1_3	R/W	1	
2	P1_2	R/W	1	
1	P1_1	R/W	1	
0	P1_0	R/W	1	

P2 (0xA0) - Port 2 Data Register

Bit	Name	R/W	Reset value	Description
7	**P2_7**	R/W	1	Data of port 2, bits 0 to 7
6	**P2_6**	R/W	1	
5	**P2_5**	R/W	1	
4	**P2_4**	R/W	1	
3	**P2_3**	R/W	1	
2	**P2_2**	R/W	1	
1	**P2_1**	R/W	1	
0	**P2_0**	R/W	1	

P3 (0xB0) - Port 3 Data Register

Bit	Name	R/W	Reset value	Description
7	**-**	R0	0	Reserved, read as 0
6	**-**	R0	0	Reserved, read as 0
5	**P3_5**	R/W	1	Data of port 3, bits 0 to 5
4	**P3_4**	R/W	1	
3	**P3_3**	R/W	1	
2	**P3_2**	R/W	1	
1	**P3_1**	R/W	1	
0	**P3_0**	R/W	1	

P0DIR (0xA4) - Port 0 Direction Register

Bit	Name	R/W	Reset value	Description
7	**-**	R0	0	Reserved, read as 0
6	**-**	R0	0	Reserved, read as 0
5	**-**	R0	0	Reserved, read as 0
4	**-**	R0	0	Reserved, read as 0
3	**P0DIR_3**	R/W	1	Port 0 direction register, bit 0 to 3. Each bit sets the direction of the associated pin on Port 0. 0 : Associated pin is an output 1 : Associated pin is an input
2	**P0DIR_2**	R/W	1	
1	**P0DIR_1**	R/W	1	
0	**P0DIR_0**	R/W	1	

P1DIR (0xA5) - Port 1 Direction Register

Bit	Name	R/W	Reset value	Description
7	**P1DIR_7**	R/W	1	Port 1 direction register, bit 0 to 7. Each bit sets the direction of the associated pin on Port 1. 0 : Associated pin is an output 1 : Associated pin is an input
6	**P1DIR_6**	R/W	1	
5	**P1DIR_5**	R/W	1	
4	**P1DIR_4**	R/W	1	
3	**P1DIR_3**	R/W	1	
2	**P1DIR_2**	R/W	1	
1	**P1DIR_1**	R/W	1	
0	**P1DIR_0**	R/W	1	

P2DIR (0xA6) - Port 2 Direction Register

Bit	Name	R/W	Reset value	Description
7	**P2DIR_7**	R/W	1	Port 2 direction register, bit 0 to 7. Each bit sets the direction of the associated pin on Port 2. 0 : Associated pin is an output 1 : Associated pin is an input
6	**P2DIR_6**	R/W	1	
5	**P2DIR_5**	R/W	1	
4	**P2DIR_4**	R/W	1	
3	**P2DIR_3**	R/W	1	
2	**P2DIR_2**	R/W	1	
1	**P2DIR_1**	R/W	1	
0	**P2DIR_0**	R/W	1	

P3DIR (0xA7) - Port 3 Direction Register

Bit	Name	R/W	Reset value	Description
7	**-**	R0	0	Reserved, read as 0
6	**-**	R0	0	Reserved, read as 0
5	**P3DIR_5**	R/W	1	Port 3 direction register, bit 0 to 7. Each bit sets the direction of the associated pin on Port 3. 0 : Associated pin is an output 1 : Associated pin is an input
4	**P3DIR_4**	R/W	1	
3	**P3DIR_3**	R/W	1	
2	**P3DIR_2**	R/W	1	
1	**P3DIR_1**	R/W	1	
0	**P3DIR_0**	R/W	1	

16.2 Timer 0 / Timer 1

CC1010 contains two standard 8051 timers/counters (Timer 0 and Timer 1) which can operate as either a timer with a clock rate based on the system clock (as defined by the current clock mode), or as an event counter clocked by the **T0** (**P3.4** for Timer 0) or **T1** (**P3.5** for Timer 1) inputs.

Each Timer / Counter has a 16-bit register which is readable and writeable through **TL0** and **TH0** for Timer / Counter 0 and **TL1** and **TH1** for Timer / Counter 1. These registers are described below.

TL0 (0x8A) - Timer / Counter 0 Low byte counter value

Bit	Name	R/W	Reset value	Description
7:0	**TL0(7:0)**	R/W	0x00	Timer / Counter 0, low byte counter value

TL1 (0x8B) - Timer / Counter 1 Low byte counter value

Bit	Name	R/W	Reset value	Description
7:0	**TL1(7:0)**	R/W	0x00	Timer / Counter 1, low byte counter value

TH0 (0x8C) - Timer / Counter 0 High byte counter value

Bit	Name	R/W	Reset value	Description
7:0	**TH0(7:0)**	R/W	0x00	Timer / Counter 0, high byte counter value

TH1 (0x8D) - Timer / Counter 1 High byte counter value

Bit	Name	R/W	Reset value	Description
7:0	**TH1(7:0)**	R/W	0x00	Timer / Counter 1, high byte counter value

16.2.1 Timer / Counter 0 and 1 Modes

Timer / Counter 0 and 1 can individually be programmed to operate in one out of four different modes, controllable through the registers **TMOD** and **TCON**. They are as follows:

- 13-bit timer / counter (Mode 0)
- 16-bit timer / counter (Mode 1)
- 8-bit timer / counter with auto-reload (Mode 2)
- Two 8-bit timers / counters (Mode 3, Timer 0 only)

See the register descriptions for **TMOD** and **TCON** on the following pages.

TMOD (0x89) - Timer / Counter 0 and 1 Mode register

Bit	Name	R/W	Reset value	Description
7	**GATE1**	R/W	0	Timer / Counter 1 gate control 0 : Timer / Counter 1 will clock only when **TCON.TR1** is set. 1 : Timer / Counter 1 will clock only when **TCON.TR1** is set and the $\overline{\mathbf{INT0}}$ input is high.
6	**C/$\overline{\mathbf{T}}$1**	R/W	0	Counter / Timer select for Counter / Timer 1 0 : Timer 1 is clocked by the system clock divided by 4 or 12, depending on the state of **CKCON.T1M** (see page 55) 1 : Timer 1 is clocked by the **T1** pin.
5	**M1.1**	R/W	0	Timer / Counter 1 mode select bits 00 : 13-bit counter 01 : 16-bit counter 10 : 8-bit counter with auto-reload 11 : Timer 1 off
4	**M1.0**	R/W	0	
3	**GATE0**	R/W	0	Timer / Counter 0 gate control 0 : Timer / Counter 0 will clock only when **TCON.TR0** is set. 1 : Timer / Counter 0 will clock only when **TCON.TR0** is set and the $\overline{\mathbf{INT0}}$ input is high.
2	**C/$\overline{\mathbf{T}}$0**	R/W	0	Counter / Timer select for Counter / Timer 0 0 : Timer 0 is clocked by the system clock divided by 4 or 12, depending on the state of **CKCON.T0M** (see page 55) 1 : Timer 0 is clocked by the **T0** pin.
1	**M0.1**	R/W	0	Timer / Counter 0 mode select bits 00 : 13-bit counter 01 : 16-bit counter 10 : 8-bit counter with auto-reload 11 : Two 8-bit counters
0	**M0.0**	R/W	0	

TCON (0x88) - Timer / Counter 0 and 1 control register

Bit	Name	R/W	Reset value	Description
7	**TF1**	R/W	0	Timer 1 overflow flag. **TF1** is set to 1 by hardware when the Timer 1 count overflows and is cleared by hardware when the 8051 vectors to the interrupt service routine.
6	**TR1**	R/W	0	Timer 1 run control bit 0 : Timer / Counter 1 is disabled 1 : Timer / Counter 1 is enabled
5	**TF0**	R/W	0	Timer 0 overflow flag. **TF0** is set to 1 by hardware when the Timer 0 count overflows and is cleared by hardware when the 8051 vectors to the interrupt service routine.
4	**TR0**	R/W	0	Timer 0 run control bit 0 : Timer / Counter 0 is disabled 1 : Timer / Counter 0 is enabled
3	**IE1**	R/W0	0	External interrupt 1 edge detect (interrupt flag) If external interrupt 1 is configured to be edge sensitive (**TCON.IT1** = 1), **IE1** is set by hardware when a negative edge is detected on the $\overline{\textbf{INT1}}$ pin and is cleared by hardware when the 8051 vectors to the corresponding interrupt service routine. In edge-sensitive mode, **IE1** can also be set by software. If external interrupt 1 is configured to be level-sensitive (**TCON.IT1** = 0), **IE1** is set when the $\overline{\textbf{INT1}}$ pin is low and cleared when the $\overline{\textbf{INT1}}$ pin is high. In level-sensitive mode, software cannot write to **IE1**.
2	**IT1**	R/W	0	External interrupt 1 type select. 0 : The $\overline{\textbf{INT1}}$ interrupt is triggered when $\overline{\textbf{INT1}}$ is low (level sensitive). 1 : The $\overline{\textbf{INT1}}$ interrupt is triggered on the falling edge (edge sensitive)
1	**IE0**	R/W0	0	External interrupt 0 edge detect (interrupt flag) If external interrupt 0 is configured to be edge sensitive (**TCON.IT0** = 1), **IE0** is set by hardware when a negative edge is detected on the $\overline{\textbf{INT0}}$ pin and is cleared by hardware when the 8051 vectors to the corresponding interrupt service routine. In edge-sensitive mode, **IE0** can also be set by software. If external interrupt 0 is configured to be level-sensitive (**TCON.IT0** = 0), **IE0** is set when the $\overline{\textbf{INT0}}$ pin is low and cleared when the $\overline{\textbf{INT0}}$ pin is high. In level-sensitive mode, software cannot write to **IE0**.
0	**IT0**	R/W	0	External interrupt 0 type select. 0 : The $\overline{\textbf{INT0}}$ interrupt is triggered when $\overline{\textbf{INT0}}$ is low (level sensitive). 1 : The $\overline{\textbf{INT0}}$ interrupt is triggered on the falling edge (edge sensitive)

CKCON (0x8E) - Timer Clock rate Control Register

Bit	Name	R/W	Reset value	Description
7	**-**	R0	0	Reserved, read as 0
6	**-**	R0	0	Reserved, read as 0
5	**-**	R0	0	Reserved, read as 0
4	**T1M**	R/W	0	Timer 1 clock select. **T1M** has no effect in counter mode. 0 : Timer 1 uses the μC clock divided by 12 (for compatibility with the 80C32) 1 : Timer 1 uses the μC clock divided by 4
3	**T0M**	R/W	0	Timer 0 clock select. **T0M** has no effect in counter mode. 0 : Timer 0 uses the μC clock divided by 12 (for compatibility with the 80C32) 1 : Timer 0 uses the μC clock divided by 4
2:0	**MD(2:0)**	R/W	001	**MD(2:0)** controls the memory stretch cycles when accessing the external RAM. The reset value is 001, but for faster access to external RAM, **MD(2:0)** should always be written 000.

16.2.2 Mode 0

Mode 0 operation is illustrated for timer or counter 0 and 1 in Figure 8. The timer / counter uses bit 0 to 4 of **TL0** / **TL1** and all 8 bits of **TH0** / **TH1** as a 13 bit counter. **TCON.TR0** / **TCON.TR1** must be set to enable the Timer / Counter.

The **C/$\overline{T}$** bit in **TMOD** selects the Timer or Counter clock source as described. Transitions are counted from the selected source, as long as **TMOD.GATE0** / **TMOD.GATE1** is 0, or **TMOD.GATE0** / **TMOD.GATE1** is 1 and the corresponding interrupt pin (**$\overline{INT0}$** / **$\overline{INT1}$**) is deasserted.

When the 13-bit count increments from 0x1FFF (all ones), the counter rolls over to all zeros. The overflow flag **TCON.TF0** / **TCON.TF1** is then set.

The 3 most significant bits in **TL0** / **TL1** are undetermined in Mode 0, and should be masked by software for evaluation.

In Mode 0, the timer timeout period is determined by:

$$T = \frac{(12 - 8 \cdot CKCON.TxM)(8192 - THx:TLx)}{f_{xosc}}$$

where THx:TLx is the contents of the THx:TLx registers if this is reloaded in the interrupt handler, or 0 if no reload is done.

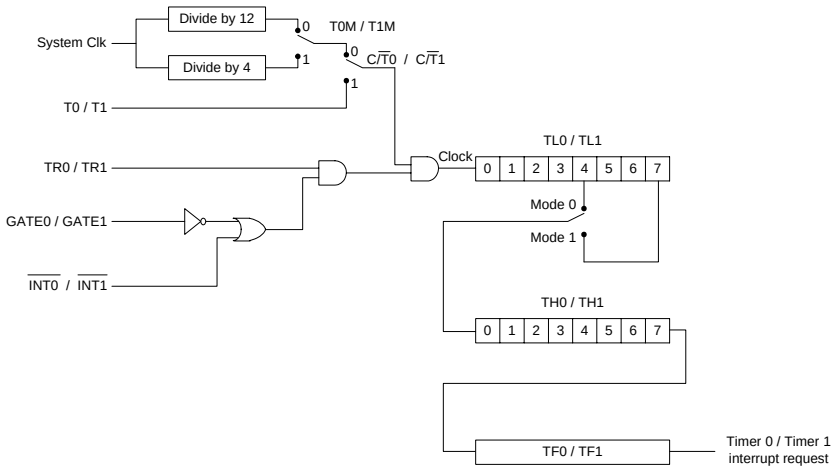

Figure 8. Mode 0 and Mode 1 operation for Timer / Counter 0 or 1

16.2.3 Mode 1

Mode 1 operation is illustrated for Timer / Counter 0 and 1 in Figure 8. The counter is configured as a 16-bit counter, as compared to the 13 bits in Mode 0, and all bits in **`TL0`** or **`TL1`** are thus used. The counter overflows when the count increments from 0xFFFF.

Otherwise, Mode 1 operation is the same as Mode 0.

In Mode 1, the timer timeout period is determined by:

$$T = \frac{(12 - 8 \cdot CKCON.TxM)(65536 - THx:TLx)}{f_{xosc}}$$

where THx:TLx is the contents of the THx:TLx registers if this is reloaded in the interrupt handler, or 0 if no reload is done.

16.2.4 Mode 2

Mode 2 operation is illustrated for Timer / Counter 0 and 1 in Figure 9. Mode 2 operates as an 8-bit counter with automatic reload of the start value.

The Timer / Counter is controlled as for Mode 0 and Mode 1, but when **`TL0`** / **`TL1`** overflows, **`TH0`** / **`TH1`** is loaded into **`TL0`** / **`TL1`.**

In Mode 2, the timer timeout period is determined by:

$$T = \frac{(12 - 8 \cdot CKCON.TxM)(256 - THx)}{f_{xosc}}$$

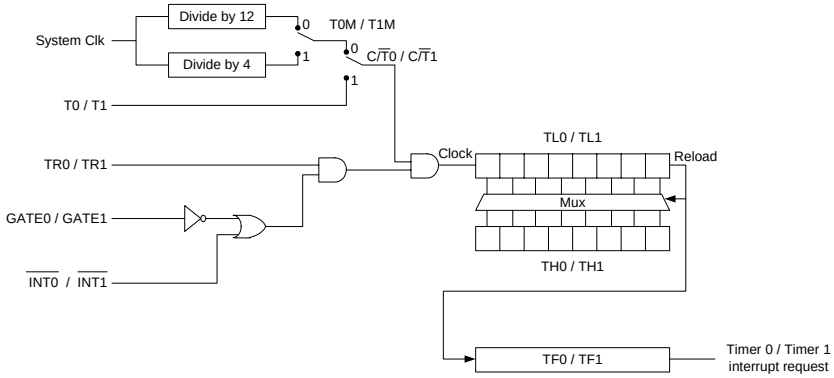

Figure 9. Mode 2 operation for Timer / Counter 0 or 1

16.2.5 Mode 3

In Mode 3, which is illustrated in Figure 10, Timer 0 is operated as two separate 8-bit counters and Timer 1 stops counting and holds its value.

TL0 is configured as an 8-bit counter controlled by the normal Timer 0 control bits. It counts either clock cycles divided by 4 or by 12 (as given by **CKCON.T0M**), or high to low transitions on **T0** (as given by **TMOD.C/$\overline{\text{T}}$0**). It is also possible to use the **GATE** function for TL0 to set **$\overline{\text{INT0}}$** as count enable.

TH0 is locked into a timer function, and takes over the use of **TR1** and **TF1** from Timer 1. It counts clock cycles divided by 4 or 12 (as given by **CKCON.T1M**). **TH0** may then generate Timer 1 interrupts.

Timer 1 has limited usage when Timer 0 is in mode 3. This is because Timer 0 uses the Timer 1 control bit **TR1** and the interrupt flag **TF1**. However, Timer 1 can still be used for baud rate generation and the Timer 1 count values are still available in the **TL1** and **TH1** registers.

Control of Timer 1 when Timer 0 is in mode 3 is done through the Timer 1 mode bits. To turn Timer 1 on, set Timer 1 to mode 0, 1 or 2. To turn Timer 1 off, set it to mode 3. Timer 1 can count clock cycles divided by 4 or 12 or high to low transitions on the **T1** pin. The **GATE** function is also available.

In Mode 3, the timer timeout periods are determined by:

$$T = \frac{(12 - 8 \cdot CKCON.TxM)(256 - TYx)}{f_{xosc}}$$

where TYx is the contents of the THx or TLx register if this is reloaded in the interrupt handler, or 0 if no reload is done.

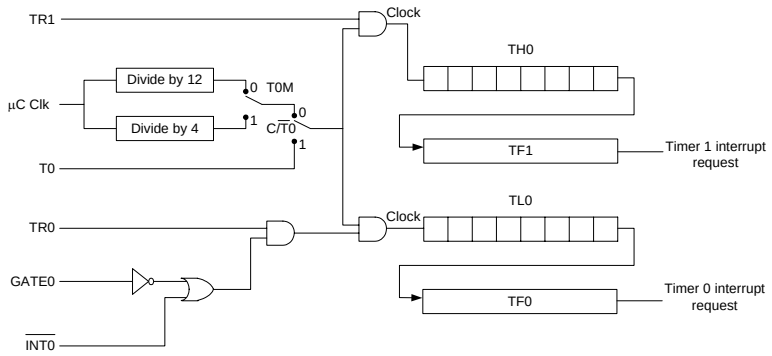

Figure 10. Mode 3 operation for Timer / Counter 0

16.3 Timer 2 / 3 with PWM

CC1010 also features two timers with pulse width modulation (PWM) outputs. Each timer can generate interrupts, as described in the Interrupts section on page 28. The timers are individually set in one of two modes, timer mode or PWM mode. This is controlled through the bits **M2** and **M3** in the **TCON2** control register shown below.

Timer 2 and Timer 3 are enabled individually through the bits **TCON2.TR2** and **TCON2.TR3**.

TCON2 (0xA9) - Timer Control register 2

Bit	Name	R/W	Reset value	Description
7	**-**	R0	0	Reserved, read as 0
6	**-**	R0	0	Reserved, read as 0
5	**-**	R0	0	Reserved, read as 0
4	**-**	R0	0	Reserved, read as 0
3	**TR3**	R/W	0	Timer 3 run control 0 : Timer 3 is disabled. The Timer 3 counter is cleared. 1 : Timer 3 is enabled.
2	**M3**	R/W	0	Timer 3 mode control. 0 : Timer 3 is in timer mode. 1 : Timer 3 is in PWM mode. **P3.5** is set to be an output, overriding **P3DIR(5)**
1	**TR2**	R/W	0	Timer 2 run control 0 : Timer 2 is disabled. The Timer 2 counter is cleared. 1 : Timer 2 is enabled.
0	**M2**	R/W	0	Timer 2 mode control. 0 : Timer 2 is in timer mode. 1 : Timer 2 is in PWM mode. **P3.4** is set to be an output, overriding **P3DIR(4)**

16.3.1 Timer Mode

Timer 2 / Timer 3 can be set in Timer Mode by clearing the bit **TCON2.M2** / **TCON2.M3**. Timer Mode operation is illustrated in Figure 11. The 16 bit counter is preloaded with **T2** and **T2PRE** (or **T3** and **T3PRE**) as shown. When disabling the timer through clearing **TCON2.TR2** (or **TCON2.TR3**) the counter is also preloaded. The counter value cannot be read by software.

When the counter underflows (decrements from a zero value), it is loaded with the contents of **T2** / **T3** and **T2PRE** / **T3PRE**, and the interrupt request bit **EXIF.TF2** / **EXIF.TF3** is set by hardware. The interrupt request must be cleared by software.

In Timer mode, interrupts are generated with an interval as given by T_{nINT} , where $n \subseteq \{2,3\}$:

$$T_{nInt} = \frac{255 \cdot (\mathbf{TnPRE} \cdot 256 + \mathbf{Tn} + 1)}{f_{system}}$$

As long as **TnPRE** and **Tn** are set before **TCON.TRn**, the first interrupt is generated T_{nINT} after enabling the timer and then with T_{nINT} intervals.

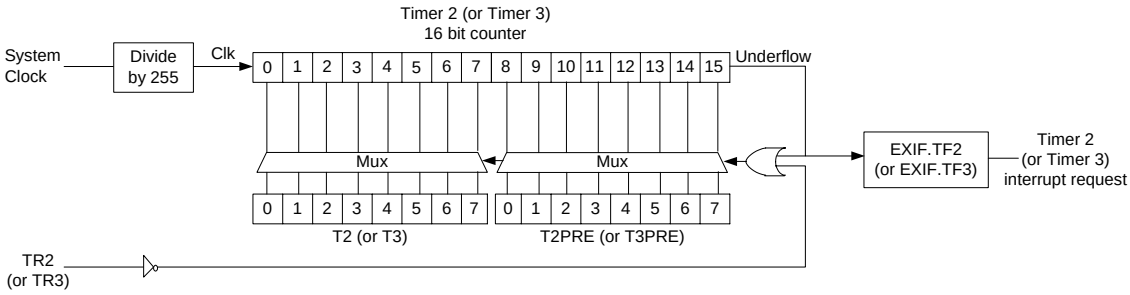

Figure 11. Timer Mode operation for Timer 2 / Timer 3

T2PRE (0xAA) - Timer 2 Prescaler Control

Bit	Name	R/W	Reset value	Description
7:0	**T2PRE(7:0)**	R/W	0x00	Timer 2 Prescaler Control. In Timer Mode, **T2PRE** sets the 8 most significant bits of the 16-bit counter reload value. In PWM Mode, **T2PRE** sets the prescaler value that sets the PWM period.

T3PRE (0xAB) - Timer 3 Prescaler Control

Bit	Name	R/W	Reset value	Description
7:0	**T3PRE(7:0)**	R/W	0x00	Timer 3 Prescaler Control. In Timer Mode, **T3PRE** sets the 8 most significant bits of the 16-bit counter reload value. In PWM Mode, **T3PRE** sets the prescaler value that sets the PWM period.

T2 (0xAC) - Timer 2 Low byte counter value

Bit	Name	R/W	Reset value	Description
7:0	**T2(7:0)**	R/W	0x00	In Timer Mode, **T2** sets the 8 least significant bits of the 16-bit counter reload value. In PWM Mode **T2** sets the PWM duty cycle.

T3 (0xAD) - Timer 3 Low byte counter value

Bit	Name	R/W	Reset value	Description
7:0	**T3(7:0)**	R/W	0x00	In Timer Mode, **T3** sets the 8 least significant bits of the 16-bit counter reload value. In PWM Mode **T3** sets the PWM duty cycle.

16.3.2 PWM Mode

Timer 2 /Timer 3 can be set in PWM Mode by setting the bit **TCON2.M2** / **TCON2.M3**. The pins **P3.4** / **P3.5** are then enabled as outputs, overriding the port direction bit **P3DIR.4** / **P3DIR.5**. The port direction is overridden independent of the timer run control bit **TCON2.TR2** / **TCON2.TR3**. Interrupts are not generated in PWM mode.

P3.4 is the PWM output for timer 2, **P3.5** is the PWM output for Timer 3.

The PWM operation is illustrated in Figure 13. The PWM period T_{nPWM} for timer *n* is set by **TnPRE**:

$$T_{nPWM} = \frac{255 \cdot (\mathbf{TnPRE} + 1)}{f_{system}}$$

The PWM "high" state duration T_{nhPWM} for timer *n* is set by **Tn**:

$$T_{nhPWM} = \frac{\mathbf{Tn} \cdot (\mathbf{TnPRE} + 1)}{f_{system}}$$

This means that in PWM mode, setting **Tn** to 0 produces a constant low output and setting **Tn** to 255 produces a constant high output. The timing of the PWM outputs is illustrated in Figure 12.

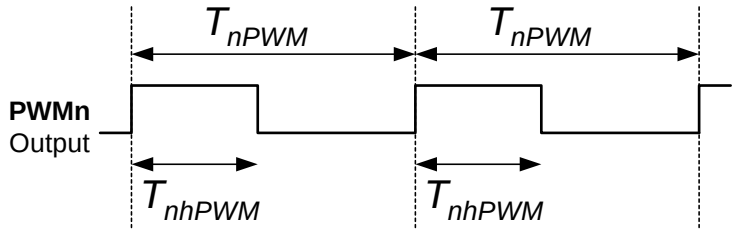

Figure 12. PWM Timing illustration

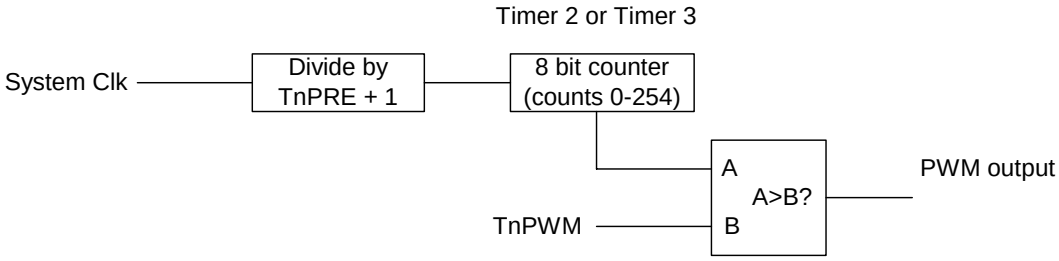

Figure 13. PWM operation for Timer 2 / Timer 3

16.4 Power On Reset (Brown-Out Detection)

The Power On Reset functionality detects power-on and brown-out situations, and includes glitch immunity and hysteresis for noise and transient stability.

The power on reset functionality is disabled using the dedicated *POR_E* pin. Grounding *POR_E* will disable the internal power on reset. An external power-on-reset module should then be connected to the external **$\overline{\text{RESET}}$** pin.

The Power On Reset and Brown-Out Detection voltage levels are specified in the Electrical Specifications section at page 7.

16.5 Watchdog Timer

CC1010 includes an 8-bit watchdog timer that is clocked by the system clock. The clock is divided by a number in the range from 2048 to 16384, controllable through **WDT.WDTPRE(1:0)**. The divided clock controls an 8-bit timer, which generates system reset upon overflow. A block diagram for the Watchdog Timer is shown in Figure 14.

Chipcon recommends that the watchdog timer should be disabled when the *CC1010* is clocked from the 32 kHz oscillator (Clock mode 1).

Note that the watchdog timer is not active in Power-down mode, and therefore cannot wake up the *CC1010* from Power-Down mode.

WDT (0xD2) - Watchdog Timer Control Register

Bit	Name	R/W	Reset value	Description
7	-	R0	0	Reserved, read as 0
6	-	R0	0	Reserved, read as 0
5	-	R0	0	Reserved, read as 0
4	**WDTSE**	R/W	0	Watchdog Timer Stop Enable, used to disable the watchdog timer
3	**WDTEN**	R/W	1	Watchdog Timer Enable / Disable 0 : The watchdog timer is disabled 1 : The watchdog timer is enabled The watchdog timer is enabled after reset. To disable the watchdog timer, **WDTSE** must be used as described in this section.
2	**WDTCLR**	R0/W	0	Watchdog timer clear signal. **WDTCLR** must periodically be set to prevent the watchdog timer from resetting the system. **WDTCLR** is cleared by hardware, and is thus always read 0. 0 : Normal watchdog operation 1 : Watchdog timer is cleared.
1:0	**WDTPRE.1**	R/W	11	Watchdog timer prescaler control. **WDTPRE(1:0)** controls the division of the main crystal oscillator clock to generate the watchdog timer clock. 00 : $f_{WDT} = f_{XOSC} / 2048$ 01 : $f_{WDT} = f_{XOSC} / 4096$ 10 : $f_{WDT} = f_{XOSC} / 8192$ 11 : $f_{WDT} = f_{XOSC} / 16384$

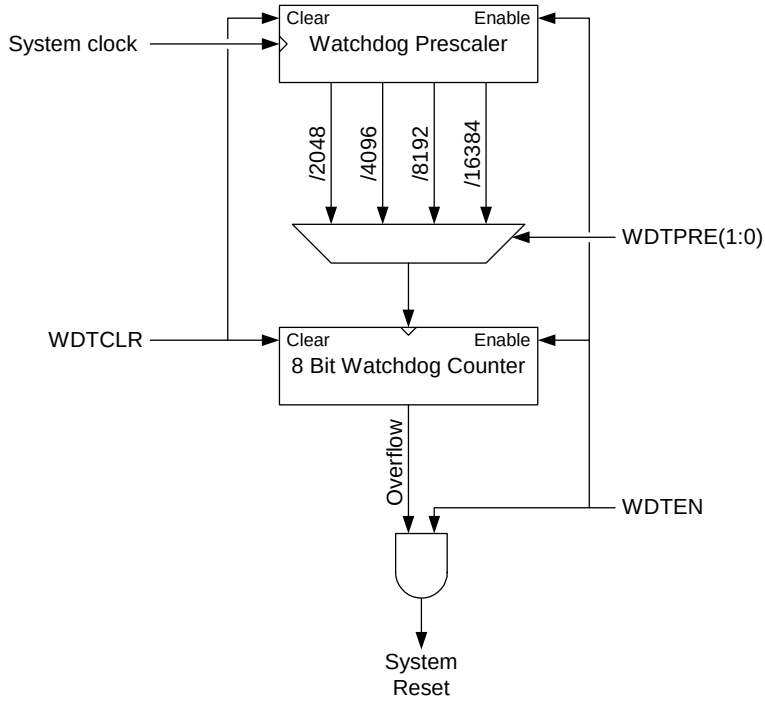

Figure 14. Watchdog Timer

Setting different prescaler settings, combined with different Main Crystal Oscillator frequencies, generates reset at an interval of:

$$\frac{256 \cdot 2^{(11+WDTPRE)}}{f_{system}}$$

The intervals for the maximum and minimum clock frequencies are shown in Table 21 below.

WDTPRE.1	**WDTPRE.0**	**Division Rate**	**Reset timing, given f_{XOSC} = 3MHz**	**Reset timing, given f_{XOSC} = 24MHz**
0	0	2048	175 ms	21.8 ms
0	1	4096	350 ms	43.7 ms
1	0	8192	699 ms	87.4 ms
1	1	16384	1400 ms	175 ms

Table 21. Watchdog Timer timing

16.5.1 Disabling the Watchdog Timer

The Watchdog Timer is enabled after system reset, through the Watchdog Timer enable flag **`WDT.WDTEN`**. To disable the Watchdog Timer, this flag must be cleared. However, clearing this flag requires the user to first set the flag **`WDT.WDTSE`**, and then clearing **`WDT.WDTEN`** within 16 system clock periods (preferably in the next instruction).

If interrupts are enabled while disabling the Watchdog Timer, the user must make sure that **`WDT.WDTEN`** is actually cleared. This could for instance be done as follows:

```
while (WDT & 0x08) {
    WDT |= 0x10;  // Set WDTSE
    WDT &= ~0x08; // Clear WDTEN
}
```

16.5.2 Enabling the Watchdog Timer

Enabling the Watchdog Timer is simply done by setting **WDT.WDTEN**. Using the **WDT.WDTSE** control bit is not required.

16.6 Real-time Clock

The real-time clock can generate interrupts with intervals ranging from 1 to 127 seconds. It is connected to the 32.768 kHz crystal oscillator, which is disabled after reset. It must be enabled as described in the section on page 33. An external 32.768 kHz clock signal can also be applied, as described.

The interrupt interval is programmed in the range from 1 through 127 seconds by setting **RTCON.RT(6:0)**. The timer is enabled by setting **RTCON.RTEN**. The first interrupt will be generated **RT** seconds after **RTEN** is set.

The real-time clock interrupt must be enabled as described in the Interrupts section on page 28.

The RTC oscillator circuit is shown in Figure 15. The loading capacitors values can be calculated as described for the main crystal oscillator at page 32.

RTCON (0xED) – Real-time Clock Control Register

Bit	Name	R/W	Reset value	Description
7	**RTEN**	R/W	0	Real-time Clock Enable / Disable 0 : Real-time Clock is disabled 1 : Real-time Clock is enabled
6:0	**RT(6:0)**	R/W	0x00	Real-time Clock interrupt interval control. **RT(6:0)** gives the desired interrupt interval in seconds. **RT(6:0)** must be between 1 and 127.

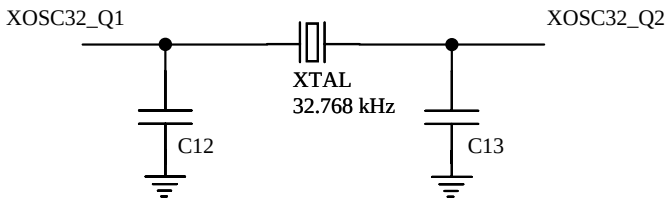

Figure 15. RTC oscillator circuit

16.7 Serial Port 0 and 1

Two serial ports, serial port 0 and 1, are implemented. They are controlled through the **SCON0** and **SCON1** control register. The data is buffered in **SBUF0** and **SBUF1**.

Serial port 0 may be used for general purpose serial communication. Timer 1 may be used to generate different baud rates. Serial port 1 is primarily for use with an in-circuit-debugger, but can also be used for general purpose serial communication. A block diagram is shown in Figure 16.

The general-I/O ports that map to the same physical pins as the serial ports must be configured in a certain way in order to allow serial communication. This is summarized in Table 22.

The mode is set in **SCON0.SMx_0** / **SCON1.SMx_0**. To receive data, **SCON0.REN_0** / **SCON1.REN_1** must be enabled for the ports. Separate transmit and receive interrupt flags are available in **SCON0.TI_0** / **RI_0** and **SCON1.TI_1** / **RI_1**. Note that the baud rate also depends on the *Clock Mode* selected (see page 35).

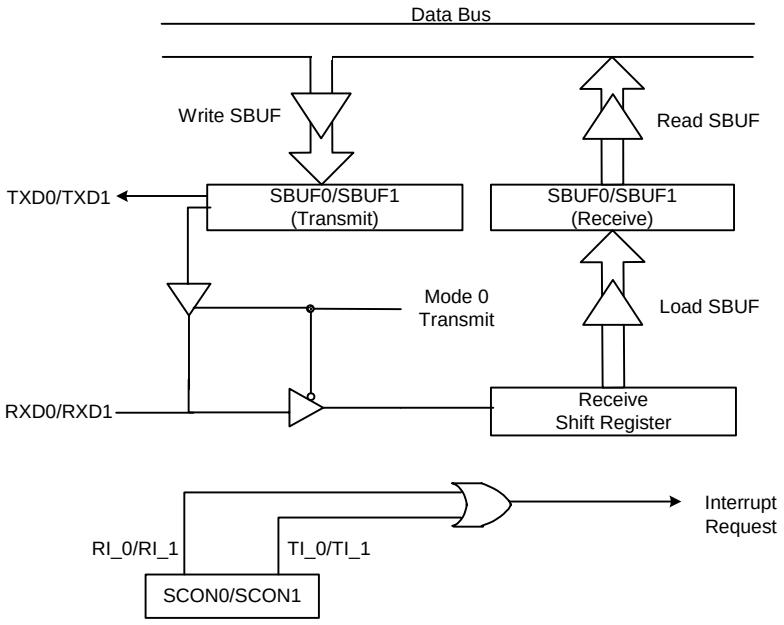

Figure 16. Serial ports block diagram

		UART0				UART1			
		P3.0	P3.1	P3DIR.0	P3DIR.1	P2.0	P2.1	P2DIR.0	P2DIR.1
RX	Mode 0	x	1	1	0	x	1	1	0
	Mode 1-3	x	x	1	x	x	x	1	x
TX	Mode 0	1	1	0	0	1	1	0	0
	Mode 1-3	x	1	x	0	x	1	x	0

Table 22. Configuration of general purpose I/O for UART0 and UART1

SBUF0 (0x99) - Serial Port 0, data buffer

Bit	Name	R/W	Reset value	Description
7:0	**SBUF0(7:0)**	R/W	0x00	Serial Port 0, data buffer.

SBUF1 (0xC1) – Serial Port 1, data buffer

Bit	Name	R/W	Reset value	Description
7:0	**SBUF1(7:0)**	R/W	0x00	Serial Port 1, data buffer

SCON0 (0x98) - Serial Port 0 Control Register

Bit	Name	R/W	Reset value	Description
7	**SM0_0**	R/W	0	Serial Port 0 mode bits, decoded as: **SM0_0 SM1_0** Mode 0 0 0 (Synchronous half duplex) 0 1 1 (Asynchronous full duplex, start + stop bit) 1 0 2 (Asynchronous full duplex, start + stop bit, 9th data bit) 1 1 3 (Asynchronous full duplex, start + stop bit, 9th data bit)
6	**SM1_0**	R/W	0	
5	**SM2_0**	R/W	0	Multiprocessor communication enable. In modes 2 and 3 **SM2_0** = 1 enables the multiprocessor communication feature: In mode 2 or 3 **RI_0** will not be activated if the received 9th bit is 0. If **SM2_0** = 1 in mode 1, **RI_0** will only be activated if a valid stop bit is received. In mode 0 **SM2_0** establishes the baud rate: when **SM2_0** = 0 the baud rate is clk / 12; when **SM2_0** = 1 the baud rate is clk / 4.
4	**REN_0**	R/W	0	Receive enable. When **REN_0** = 1 reception is enabled.
3	**TB8_0**	R/W	0	Defines the state of the 9th data bit transmitted in modes 2 and 3.
2	**RB8_0**	R/W	0	In modes 2 and 3 **RB8_0** indicates the state of the 9th bit received. In mode 1 **RB8_0** indicates the state of the received stop bit. In mode 0 **RB8_0** is not used.
1	**TI_0**	R/W	0	Transmit interrupt flag. Indicates that the transmit data word has been shifted out. In mode 0 **TI_0** is set at the end of the 8th data bit. In all other modes **TI_0** is set when the stop bit is placed on the **TXD0** pin. **TI_0** must be cleared by the software.
0	**RI_0**	R/W	0	Receive interrupt flag. Indicates that a serial data word has been received. In mode 0 **RI_0** is set at the end of the 8th data bit. In mode 1 **RI_0** is set after the last sample of the incoming stop bit, subject to the state of **SM2_0**. In modes 2 and 3 **RI_0** is set at the end of the last sample of **RB8_0**. **RI_0** must be cleared by the software.

SCON1 (0xC0) - Serial Port 1 Control Register

Bit	Name	R/W	Reset value	Description
7	**SM0_1**	R/W	0	Serial Port 1 mode bits, decoded as: **SM0_1 SM1_1** Mode 0 0 0 (Synchronous half duplex) 0 1 1 (Asynchronous full duplex, start + stop bit) 1 0 2 (Asynchronous full duplex, start + stop bit, 9th data bit) 1 1 3 (Asynchronous full duplex, start + stop bit, 9th data bit)
6	**SM1_1**	R/W	0	
5	**SM2_1**	R/W	0	Multiprocessor communication enable. In modes 2 and 3 **SM2_1** = 1 enables the multiprocessor communication feature: In mode 2 or 3 **RI_1** will not be activated if the received 9th bit is 0. If **SM2_1** = 1 in mode 1 **RI_1** will only be activated if a valid stop bit is received. In mode 0 **SM2_1** establishes the baud rate: when **SM2_1** = 0 the baud rate is clk / 12; when **SM2_1**= 1 the baud rate is clk / 4.
4	**REN_1**	R/W	0	Receive enable. When **REN_1** = 1 reception is enabled.
3	**TB8_1**	R/W	0	Defines the state of the 9th data bit transmitted in modes 2 and 3.
2	**RB8_1**	R/W	0	In modes 2 and 3 **RB8_1** indicates the state of the 9th bit received. In mode 1 **RB8_1** indicates the state of the received stop bit. In mode 0 **RB8_1** is not used.
1	**TI_1**	R/W	0	Transmit interrupt flag. Indicates that the transmit data word has been shifted out. In mode 0 **TI_1** is set at the end of the 8th data bit. In all other modes **TI_1** is set when the stop bit is placed on the **TXD1** pin. **TI_1** must be cleared by the software.
0	**RI_1**	R/W	0	Receive interrupt flag. Indicates that a serial data word has been received. In mode 0 **RI_1** is set at the end of the 8th data bit. In mode 1 **RI_1** is set after the last sample of the incoming stop bit, subject to the state of **SM2_1**. In modes 2 and 3 **RI_1** is set at the end of the last sample of **RB8_1**. **RI_1** must be cleared by the software.

16.7.1 MODE 0

Serial mode 0 provides synchronous, half-duplex serial communication. For serial port 0, pin **RXD0** (**P3.0**) is used for data input and output while **TXD0** (**P3.1**) provides the bit clock for both transmit and receive. For serial port 1 the corresponding pins are **RXD1** (**P2.0**) and **TXD1** (**P2.1**).

The serial mode 0 baud rate is set by **SCON0.SM2_0** / **SCON1.SM2_1**. If this bit is cleared, the baud rate is the system clock divided by 4. If the bit is set, the system clock is divided by 12.

Data transmission begins when an instruction writes to the **SBUF0** (or **SBUF1**) register. The serial port shifts the data byte out, LSB first, at the selected baud rate.

Data reception starts when **SCON0.REN_0** / **SCON1.REN_1** is set and the receive interrupt flag **SCON0.RI_0** / **SCON1.RI_1** is cleared. The bit clock is activated and the UART shifts data in on each rising edge of the bit clock, until 8 bits have been received. Immediately after the 8th bit is shifted in, the receive interrupt flag is set and reception stops until the software clears the flag.

The clock output is high when the serial port is idle. In reception, data is shifted in on the rising edge of the clock. In transmission, each new bit is set on the falling edge of the clock.

Baudrate (kBaud)	T1M/TH1					
	F_{xosc} = 3.6864 MHz	F_{xosc} = 7.3728 MHz	F_{xosc} = 11.0592 MHz	F_{xosc} = 14.7456 MHz	F_{xosc} = 18.4320 MHz	F_{xosc} = 22.1184 MHz
57.6	1/255	1/254	0/255	1/252	1/251	1/250
19.2	1/253	1/250	0/253	0/252	1/241	1/238
9.6	1/250	1/244	0/250	0/248	1/226	1/220
4.8	1/244	1/232	0/244	0/240	1/196	1/184
2.4	1/232	1/208	0/232	0/224	1/136	1/112
1.2	1/208	1/160	0/208	0/192	1/16	0/160

Table 23. Baud rate examples (SMODx=1)

16.7.2 MODE1

Mode 1 provides standard asynchronous full duplex communication, using a total of 10 bits: 1 start bit, 8 data bits and 1 stop bit. For receive operations, the stop bit is stored in **SCON0.RB8_0** (or **SCON1.RB8_1**). Data bits are received and transmitted with their LSB first.

The baud rate for mode 1 is a function of timer 1 overflow. Each time the timer increments from its maximum count (0xFF), a clock pulse is sent to the baud rate circuit, to be further divided by 16 or 32 as set by **PCON.SMOD0** / **EICON.SMOD1** to give the baud rate:

$$Baud\ Rate = \frac{2^{\mathbf{SMODx}}}{32} \cdot Timer\ 1\ overflow$$

As can be seen from the equation above, if both serial ports are in use simultaneously, the baud rate is equal or different by a factor 2.

It is common to use Timer 1 in Mode 2 (8-bit counter with auto-reload) for baud rate generation, although any timer mode can be used. The Timer 1 reload value is stored in the **TH1** register, which makes the complete baudrate using mode 2:

$$Baud\ Rate = \frac{2^{\mathbf{SMODx}}}{32} \cdot \frac{f_{system}}{(12 - 8 \cdot \mathbf{T1M}) \cdot (256 - \mathbf{TH1})}$$

T1M in the above equation is in register **CKCON** (see page 55), and controls the initial division in Timer 1 between 4 and 12.

Some example baud rates and reload values are shown in Table 23. The setting for other baud rates and oscillator frequencies can be determined by using the above equation.

To transmit data in mode 1, write data to **SBUF0** / **SBUF1**. Transmission is then performed on **TXD0** / **TXD1** in the following order: start bit, 8 data bits (LSB first) and then the stop bit.

Reception begins on the falling edge of a start bit received on **RXD0** / **RXD1**, if reception is enabled in **SCON0.REN_0** / **SCON1.REN_1**. The data input is sampled 16 times per baud for any baud rate. Each bit decision is performed as a majority decision between 3 successive samples in the middle of each baud. If the majority decision is not equal to zero for the start bit, the serial port will stop reception and wait for a new start bit.

When the majority decision is made for the stop-bit, the following conditions must be met:

- **RI_0** / **RI_1** is 0
- If **SM2_0** / **SM2_1** is set, the state of the stop bit must be one

If these conditions are met, the received data is buffered in **SBUF0** / **SBUF1**, the

received stop bit is stored in **RB8_0** / **RB8_1**) and the receive interrupt flag is set. If not, the received data is lost and **RB8_0** / **RB8_1** and the receive interrupt flag remains unchanged.

16.7.3 MODE2

Mode 2 provides asynchronous full-duplex communication using a total of 11 bits: 1 start bit, 8 data bits, a programmable 9th bit and 1 stop bit. The data bits are transmitted and received LSB first.

The mode 2 baud rate is either $f_{system}/32$ or $f_{system}/64$, set by **PCON.SMOD0** (or **EICON.SMOD1**). The baud rate is then:

$$Baud\ Rate = \frac{2^{\mathbf{SMODx}}}{64} \cdot f_{system}$$

To transmit data in mode 1, write data to **SBUF0** / **SBUF1**. Transmission is then performed on pin **TXD0** / **TXD1** in the following order: start bit, 8 data bits (LSB first), 9th bit (from **TB8_0** / **TB8_1**) and then the stop bit. The transmit interrupt flag **TI_0** / **TI_1** is set when the stop bit is placed on the transmit pin.

Reception must be enabled by setting **REN_0** / **REN_1**. It is then initiated by the falling edge of a start bit received on **RXD0** / **RXD1**. The input pin is sampled 16 times per baud. Majority decision is made, as with mode 1. When the majority decision is made for the stop-bit, the following conditions must be met:

- **RI_0** / **RI_1** is 0
- If **SM2_0** / **SM2_1** is set, the 9th bit and the stop bit must be one.

If these conditions are met, the received data is buffered in **SBUF0** / **SBUF1**, the received stop bit is stored in **RB8_0** / **RB8_1** and the receive interrupt flag **RI_0** / **RI_1** is set. If not, the received data is lost and **RB8** and the receive interrupt flag remains unchanged.

16.7.4 MODE 3

Mode 3 provides asynchronous, full-duplex communication, using a total of 11 bits (as with mode 2): 1 start bit, 8 data bits, a programmable 9th bit and 1 stop bit. The data bits are transmitted and received LSB first.

Transmission and reception in mode 3 is identical to mode 2, except for the baud rate generation, which is identical to mode 1.

16.7.5 Multiprocessor Communications

The multiprocessor communication feature is enabled in mode2 and mode 3, when the **SM2_0** / **SM2_1** bit is set. The 9th bit received is then stored in **RB8_0** / **RB8_1** and the interrupt bit is only set if this bit is 1.

An address byte can then be transmitted, with the 9th bit set, to generate an interrupt on all slaves. The slave(s) with the correct address (decoded in software) may then clear **SM2_0** / **SM2_1** to receive the rest of the data, which is transmitted with the 9th bit low. All other slaves will then ignore the data received.

16.8 SPI Master

The SPI master interface allows ***CC1010*** to communicate with peripheral devices such as an external serial EEPROM interface. It has a programmable data rate up to 3 MHz, depending on the frequency of the main crystal.

The SPI master interface is controlled using the **SPCR** register shown below.

Setting **SPCR.SPE** enables the SPI interface. Pins **P0.0**, **P0.1** and **P0.2** are then reconfigured as the serial clock output **SCK**, the serial data output pin **MO** and the serial data input pin **MI**. The direction bits set in **P0DIR(0)** and **P0DIR(2)** are then ignored, setting **SCK** as an output and **MI** as an input. The direction bit **P0DIR(1)** still determines the direction of the master data output pin **MO**. This allows the SPI master to communicate with a bi-directional data line. **P0DIR(1)** should then be cleared when transmitting and set when receiving data, with **MO** and **MI** connected together externally. For normal full-duplex operation of the SPI master, **P0DIR(1)** must be cleared to set **MO** as an output.

Any other general purpose I/O-pin may be used for slave select signals to the peripheral modules.

SPCR (0xA1) - SPI Control Register

Bit	Name	R/W	Reset value	Description
7	-	R0	0	Reserved, read as 0
6	-	R/W	0	Reserved, write 0
5	**SPE**	R/W 0	0	SPI Enable. 0 : SPI interface is disabled 1 : SPI interface is enabled
4	**DORD**	R/W	0	Data Order 0 : Least significant bit (LSB) is transmitted / received first 1 : Most significant bit (MSB) is transmitted / received first
3	**CPOL**	R/W	0	Clock Polarity 0 : **SCK** has negative clock polarity 1 : **SCK** has positive clock polarity
2	**CPHA**	R/W	0	Clock Phase 0 : Data is output on **DO** when **SCK** goes from $\overline{\mathbf{CPOL}}$ to **CPOL** and is sampled from **DI** when **SCK** goes from **CPOL** to $\overline{\mathbf{CPOL}}$ 1 : Data is output on **DO** when **SCK** goes from **CPOL** to $\overline{\mathbf{CPOL}}$ and is sampled from **DI** when **SCK** goes from $\overline{\mathbf{CPOL}}$ to **CPOL**
1:0	**SPR(1:0)**	R/W	0	SPI Data Rate. **SPR(1:0)** 00 : **SCK** clock frequency = f_{XOSC} / 8 01 : **SCK** clock frequency = f_{XOSC} / 16 10 : **SCK** clock frequency = f_{XOSC} / 32 11 : **SCK** clock frequency = f_{XOSC} / 64

SPDR (0xA2) - SPI Data Register

Bit	Name	R/W	Reset value	Description
7:0	**SPDR(7:0)**	R/W	0x00	SPI Data Register Writing to **SPDR** when **SPCR.SPE** is set will initiate a data transmission. Reading **SPDR** will read the data input buffer, which is only updated after each completed transmission.

SPSR (0xA3) - SPI Status Register

Bit	Name	R/W	Reset value	Description
7:2	-	R0	0x00	Reserved, read as 0
1	**SPA**	R	0	SPI Active status bit 0 : The SPI interface is currently not transmitting data 1 : The SPI interface is currently transmitting data
0	**WCOL**	R	0	Write collision flag. This flag is updated by hardware when **SPDR** is written. 0 : The previous write to **SPDR** did not generate a data collision. 1 : The previous write to **SPDR** generated a data collision

Writing data to **SPDR** when **SPCR.SPE** is set will initiate a data transmission. 8 bits are transmitted and received with the data order, clock polarity, clock phase and data

rate as set by **SPCR.DORD**, **SPCR.CPOL**, **SPCR.CPHA** and **SPCR.SPR**.

Reading data from **SPDR** will read the input buffer, which is only updated after each complete transmission. This means that a new byte can be written to **SPDR** before reading the newly received byte in order to maximise the data rate.

If data is written to **SPDR** while a transmission is in progress, this is regarded as a collision. After each new byte written to **SPDR**, the write collision flag **SPSR.WCOL** is updated. If a collision occurs, the data written to **SPDR** is ignored and the data must be written to **SPDR** again for it to be sent.

It is also possible to check the SPI status bit, **SPSR.SPA**, before writing to **SPDR** to avoid collisions. This bit is set only when data is being transmitted.

SPI timing, data order, clock polarity and clock phase are shown in Figure 18.

It is also possible to use the master SPI interface to interface with a two-pin serial interface that uses a bi-directional data line (such as the interface used by the Chipcon CC1000 RF transceiver). In this case, you would connect the **MO** and **MI** pins together on your PCB, as shown in Figure 17. In the software, the **P0DIR.1** bit must be set correctly according to whether data is being written or read.

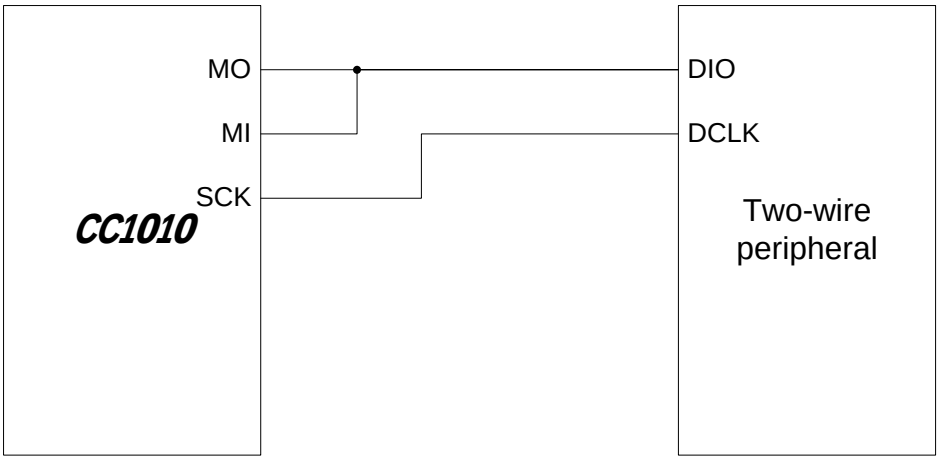

Figure 17. Two-wire serial interface

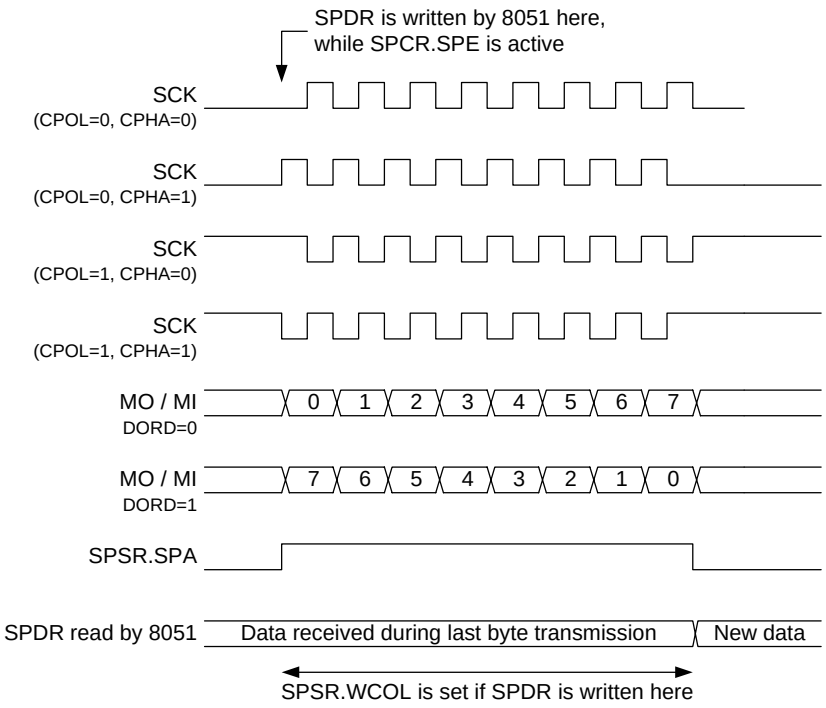

Figure 18. SPI Data Flow

16.9 DES Encryption / Decryption

DES encryption / decryption is supported by hardware in ***CC1010***. Blocks of data ranging from 1 to 256 bytes can be encrypted / decrypted in one operation by the DES module. Multiple encryption / decryption operations can also be used on larger data blocks.

Encryption is the process of encoding an information bit stream to secure the data content. The DES algorithm is a common, simple and well-established encryption routine. An encryption key of 56 bits is used to encrypt the message. The receiver must use the exact same key to decrypt the message, otherwise the message will be scrambled. The encryption and decryption operations in the DES algorithm are symmetrical operations with the same computational requirements. The operations produce the same number of output bytes as input bytes. The strength of an encryption algorithm is determined by the number of bits in the key, the more the better. The DES algorithm offers a low to medium level of security. If higher levels of security are required, a triple DES algorithm can be used. Triple DES can be achieved by running the DES algorithm three times sequentially using three different 56-bit encryption keys. The keys must be used in reverse order when decrypting.

The DES algorithm works internally on entities of 8 bytes. The Output Feedback Mode (OFB) and Cipher Feedback Mode (CFB) are DES modes of operation that permit data lengths that are not a multiple of eight bytes. The operation mode is selected through the **CRPCON.CRPMD** control bit. The same DES mode of operation must be used both for encryption and decryption to yield correct results. CFB is recommended, as it is more secure than OFB.

CRPCON.ENCDEC should be cleared when encrypting data and set when decrypting data.

56 bit DES keys are stored in external RAM, as shown in Table 24. The location is given by the register **CRPKEY**, containing the 8 most significant address bits. New keys are loaded only at the beginning of an encryption / decryption if **CRPCON.LOADKEYS** is set. If not, the same keys as used in the previous run will be used again.

The DES keys do not contain parity bits. If DES keys with parity bits are given, the parity bits must be removed before performing encryption / decryption. The keys are therefore stored as 7 successive bytes in RAM.

After running the DES, a output block **O** of length **CRPCNT** bytes is generated by encrypting / decrypting the input block **I** of same length as **O** using key K_1 as follows:

$$\mathbf{O}=E_{K1}(\mathbf{I}) \qquad \text{(encryption)}$$

$$\mathbf{O}=D_{K1}(\mathbf{I}) \qquad \text{(decryption)}$$

The following is an example on how to use the single DES algorithm hardware in ***CC1010***. First the 56-bit encryption key must be stored in the external RAM. Then the **CRPKEY** register must be written to point to the start of the encryption key. Note that the encryption key must start on a RAM address location divisible by 8. Then the data bit stream to encrypt must be stored in the external RAM. The data bit stream must consist of at least 1 byte up to a maximum of 256 bytes, and it must also start on a RAM address location divisible by 8. The **CRPDAT** register must be written to point to the start of the data bit stream, and **CRPCNT** must be written to give the number of bytes to be encrypted. Then the **CRPINI0, CRPINI1, CRPINI2, CRPINI3, CRPINI4, CRPINI5, CRPINI6, CRPINI7** registers must be written to contain the DES initialisation vector used in the OFB and CFB modes of operation. For simplicity it can be set to all zeros. Note that the initialisation vector must be the same for both encryption and decryption to yield correct results. To initiate the encryption the **CRPCON** register must be written. The bits in this register select encryption/decryption, feedback mode, and DES interrupt enable. When the

encryption has been completed, **CRPCON.CRPEN** goes low and the DES interrupt flag is set. The external RAM will now contain the encrypted data bit stream in the same location as the input data bytes were originally put. To perform the reverse operation, write **CRPCON** again with the **CRPCON.ENCDEC** bit set.

Key	First RAM Location	Last RAM Location
K_1	8 · **CRPKEY**	8 · **CRPKEY+6**

Table 24. DES key location in RAM

Encryption / decryption is done in-place, i.e. each byte of data read from external RAM for encryption / decryption will be written back to the same location after encryption / decryption as described above. The input and output blocks must start on an address which is a multiple of eight. **CRPDAT** then gives the 8 most significant address bits to the first data byte.

The encryption / decryption initialization vector should be written to registers **CRPINI0** to **CRPINI7**. These registers must be written prior to encrypting / decrypting a new block of data, as they are modified by hardware. They should be left unchanged between multiple encryption / decryption operations for DES blocks larger than 256 bytes. A zero value initialisation vector can be used, or additional security can be effected by using the initialisation vector as an additional key.

Encryption / decryption is started when **CRPCON.CRPEN** is set. When the encryption / decryption is completed, **CRPCON.CRPEN** is cleared by hardware and the interrupt flag **CRPCON.CRPIF** is set. If **CRPCON.CRPIE** is set, the interrupt flag **EXIF.ADIF** is also set, which will generate an interrupt if **EIE.ADIE** is set. (See the Interrupts section on page 28 for details on interrupts.)

The duration of a DES encryption / decryption operation is shown in Table 25. Accessing external RAM from the 8051 while encrypting / decrypting may delay the operation slightly since the access is multiplexed.

DES keys stored in Flash memory will be protected by the Flash memory read protection. For the security of the Flash protection, please refer to the disclaimer at the end of this document.

Mode	Duration (clock cycles)
Single DES	2+25·*#Data Bytes* +21·**LOADKEYS**

Table 25. DES Encryption / Decryption duration

CRPCON (0xC3) - Encryption / Decryption Control Register

Bit	Name	R/W	Reset value	Description
7	**-**	R0	0	Reserved, read as 0
6	**CRPIE**	R/W	0	Encryption / Decryption interrupt enable flag. In order for **CRPIF** to raise an interrupt, **EIE.ADIE** must also be set.
5	**CRPIF**	R/W	0	Encryption / Decryption interrupt flag. **CRPIF** is set by hardware when an encryption / decryption is completed. **CRPIF** must be cleared by software. Because the encryption /decryption shares an interrupt line with the ADC, **EXIF.ADIF** must also be cleared by software before exiting the interrupt service routine. **EXIF.ADIF** should be cleared before **CRPIF**, so that the 8051 is ready to receive a new interrupt immediately after **CRPIF** is cleared.
4	**LOADKEYS**	R/W	0	Enable / disable loading of keys at start up. 0 : New keys are not loaded at encryption / decryption start up. The same keys as used during the previous encryption / decryption will be used again. 1 : New keys are loaded from RAM at encryption / decryption start up. The key RAM location is given by **CRPKEY**.
3	**CRPMD**	R/W	0	OFB / CFB Mode 0 : OFB (Output Feedback Mode) is selected 1 : CFB (Cipher Feedback Mode) is selected
2	**ENCDEC**	R/W	0	Encryption / Decryption select 0 : Encryption is selected 1 : Decryption is selected
1	**TRIDES**	R/W0	0	Reserved, write 0
0	**CRPEN**	R/W1	0	Encryption / Decryption start and status bit. When set by software, encryption / decryption is initiated. It cannot be cleared by software, but will be cleared by hardware when the encryption / decryption is completed.

CRPKEY (0xC4) - Encryption / Decryption Key Location Register

Bit	Name	R/W	Reset value	Description
7:0	**CRPKEY(7:0)**	R/W	0x00	**CRPKEY(7:0)** gives the 8 most significant bits of the external RAM location of the DES keys. The keys are located in RAM as given in Table 24.

CRPDAT (0xC5) - Encryption / Decryption Data Location Register

Bit	Name	R/W	Reset value	Description
7:0	**CRPDAT(7:0)**	R/W	0x00	**CRPDAT(7:0)** gives the 8 most significant bits of the external RAM address of the first byte to be encrypted / decrypted. The 3 least significant address bits are all zeros.

CRPCNT (0xC6) – Encryption / Decryption Counter

Bit	Name	R/W	Reset value	Description
7:0	**CRPCNT(7:0)**	R/W	0x00	**CRPCNT(7:0)** gives the number of bytes to be encrypted / decrypted. If **CRPCNT**=0, 256 bytes are encrypted / decrypted.

CRPINIn, n∈{0..7} (0xB4-0xB7, 0xBC-0xBF) - DES Initialisation Vector

Bit	Name	R/W	Reset value	Description
7:0	**CRPINIn (7:0)**	R/W	0x00	The 8 registers **CRPINIn**, **n** ∈{0..7}, contains the 64 bit DES initialisation vector. Bits 8·**n**-1 down to 8·**n** are located in register **CRPINIn**

16.10 Random Bit Generation

CC1010 can generate real random bit sequences to be used as encryption keys, seed for a software pseudo random generator or other purposes. The data is generated from amplifying noise in the RF receiver path.

To enable random bit generation, set **RANCON.RANEN** and clear **RFMAIN.RX_PD**. Wait at least 1 ms before reading data from **RANCON.RANBIT**. The period between reads should be at least 10 μs for the data to be as random as possible.

For applications requiring guaranteed DC free data, software should process the generated data, for example by xor'ing two successive bits.

The random data generated has a relatively white spectrum, but tones have been observed when the random bit generator has been enabled for more than one second. If this is not sufficient for the application to generate the random bits required, the random bit generator should be disabled and enabled following the procedure described above before generating more data.

RANCON (0xC7) - Random Bit Generator Control Register

Bit	Name	R/W	Reset value	Description
7:2	**-**	R0	0x00	Reserved, read as 0
1	**RANEN**	R/W	0	Random Bit Generator Enable 0 : Random Bit Generator is disabled. 1 : Random Bit Generator is enabled. **RFMAIN.RX_PD** must also be cleared to generate random bits.
0	**RANBIT**	R	0	**RANBIT** returns one random bit, generated from the RF receiver path.

16.11 ADC

The on-chip 10-bit ADC is controlled by the registers **ADCON** and **ADCON2**.

Three analog pins can be sampled, selected by **ADCON.ADADR**. This register is also used to select the AD1 pin as external reference (when using AD0). When the AD1 pin is used as external reference, only two ADC inputs are available.

The ADC output is unipolar, with an output value of 0 corresponding to 0V and 1023 corresponding to the reference voltage (1.25 V or VDD depending on the setting of the **ADCREF** bit).

The analog reference voltage is controlled by **ADCON.ADCREF**. **ADCON.AD_PD** should be set when the ADC is not used in order to save power. A conversion can be started 5 μs after clearing the bit when using VDD or an external reference, or 100 μs afterwards when using the internal 1.25V reference.

The input impedance of the ADC is a 3.2pF switched capacitor that samples the input signal once for each conversion.

The average input impedance is thus:

$$\langle R_{in} \rangle = \frac{1}{C * f_s}$$

Average input impedances for minimum and maximum sampling frequencies are shown in Table 26.

f_{clk}	f_s	R_{in}
250 kHz	22.7 kHz	~14 MΩ
32 kHz	2.9 kHz	~107 MΩ

Table 26. ADC input impedance vs. sampling frequency

The average input impedance accounts for the average input current to the ADC, but *cannot* be used for estimation of conversion errors due to voltage division between the source impedance and the ADC input impedance. For that purpose the charging time of the sample capacitor must be considered.

In each conversion cycle, the input signal is sampled on the sample capacitor during one half-clock period. During this time, the accuracy of the voltage on the capacitor must reach at least ½ LSB accuracy in order to get the full accuracy of the conversion. Charging of the capacitor follows the Caharing formula:

$$V = V_{in} * (1 - e^{-t/\tau}) = V_{in} * \left(1 - e^{\frac{-t}{RC}}\right) \Rightarrow$$

$$R = \frac{-t}{C * \ln\left(1 - \frac{V}{V_{in}}\right)} = \frac{-1}{2 f_{clk} * C * \ln(err)}$$

The result of this formula is the maximum output resistance of the source, for a given ADC clock frequency and accuracy. 30% safety margin should be used, due to non-perfect duty cycle etc., i.e. a maximum output resistance 30% less than calculated should be used.

For ½ LSB accuracy in the charging, Table 27 shows the maximum output resistance that should be used for the source at maximum and minimum ADC clock frequencies.

f_{clk}	R_{max}
250 kHz	57 kΩ
32 kHz	450 kΩ

Table 27. Maximum source impedance for ADC

The ADC can be operated in 4 modes controlled by **ADCON.ADCM**. Each ADC sample conversion takes 11 ADC clock cycles. In *Clock Mode 1*, when **X32CON.CMODE** is set, the 32 kHz clock is applied directly to the ADC. The conversion time is then 344 µs. In *Clock Mode 0* the ADC clock input is derived from the main oscillator clock using the divider selected by **ADCON2.ADCDIV**. The register must be set so that the resulting ADC clock frequency is less than or equal to 250 kHz. If the clock frequency is equal

to 250 kHz, then the conversion time is 44 µs.

In single-conversion mode each conversion is initiated by setting the **ADCON.ADCRUN** control bit. The ADC interrupt flags **EXIF.ADIF** and **ADCON2.ADCIF** are set by hardware if the 8 MSB of the latest sampled value is greater than or equal to the threshold value stored in the **ADTRH** register. An interrupt service routine is then executed if the interrupt enable flags **EIE.ADIE** and **ADCON2.ADCIE** are set. To always get an interrupt upon completion of a conversion, **ADTRH** should be set to 0. The **ADCON.ADCRUN** control bit is cleared by hardware when the conversion is finished.

In the multi-conversion modes the ADC starts a new conversion every 11th ADC clock cycle. All multi-conversion modes can be stopped by clearing **ADCON.ADCRUN**, after which the ADC will abort its current conversion and then stop. In all modes an action is taken when the 8 MSB of the latest sample value is *greater than or equal* to the value written in **ADTRH**; these are:

Multi-conversion, continuous. When the threshold comparison holds true (value ≥ **ADTRH**· 4) an interrupt is generated and the corresponding interrupt service routine is then executed if the interrupt enable flags **EIE.ADIE** and **ADCON2.ADCIE** are set. The ADC will continue its conversions regardless of the result of the threshold comparison. To always get an interrupt upon completion of a conversion, **ADTRH** should be set to 0.

Multi-conversion, stopping. When the threshold comparison holds true (value ≥ **ADTRH**· 4) an interrupt is generated and the corresponding interrupt service routine is then executed if the interrupt enable flags **EIE.ADIE** and **ADCON2.ADCIE** are set. The ADC will stop when the threshold comparison holds true, clearing **ADCON.ADCRUN**.

Multi-conversion, reset-generating. When the threshold comparison holds true (value ≥ **ADTRH**· 4) a system reset is generated. This mode can be used in conjunction with the 8051's *stop mode* and the 32 kHz oscillator to achieve very low power consumption while monitoring a signal. The value stored in **ADDATH** and **ADDATL** is not affected by a reset, so that the sampled value can be read back after the reset has taken effect.

ADCON (0x93) - ADC Control Register

Bit	Name	R/W	Reset value	Description
7	**AD_PD**	R/W	1	ADC Power down bit. 0 : ADC is active 1 : ADC is in power down
6	**-**	R0	0	Reserved, read as 0
5:4	**ADCM(1:0)**	R/W	00	ADC Mode: 00 : Single-conversion mode. (Interrupt when threshold condition holds true, stop after one conversion.) 01 : Multi-conversion mode, continuous. (Interrupt when threshold condition holds true, continue sampling.) 10 : Multi-conversion mode, stopping. (Interrupt when threshold condition holds true, stop sampling.) 11: Multi-conversion mode, reset-generating. (Generate reset when threshold condition holds true.)
3	**ADCREF**	R/W	0	Select the internal ADC Voltage Reference 0 : Voltage reference is VDD 1 : Voltage reference is 1.25 V, generated on chip.
2	**ADCRUN**	R/W	0	ADC run control. Setting this bit in software will start ADC operation in single- or multi-conversion mode. In single conversion mode this bit is cleared by hardware when the single conversion is done. Multi-conversion operation can be halted at the end of the current conversion by clearing this bit. (When *ADCM*=10 the hardware clears this bit when stopping.)
1:0	**ADADR(1:0)**	R/W	00	Select the analog input to the ADC 00 : Mux data from the AD0 pin 01 : Mux data from the AD1 pin 10 : Mux data from the AD2 (RSSI/IF) pin 11 : Mux data from the AD0 pin with AD1 as an external reference. **ADCREF** is ignored in this setting

ADDATL (0x94) - ADC Data Register, Low Byte

Bit	Name	R/W	Reset value	Description
7:0	**ADDAT(7:0)**	R	0x00	8 LSB of ADC data output

ADDATH (0x95) - ADC Data Register, High Bits

Bit	Name	R/W	Reset value	Description
7:2	**-**	R0	0x00	Reserved, read as 0
1:0	**ADDAT(9:8)**	R	0x00	2 MSB of ADC data output, latched when **ADDATL** is read

ADCON 2(0x96) - ADC Control Register 2

Bit	Name	R/W	Reset value	Description
7	**ADCIE**	R/W	0	ADC interrupt enable flag. In order for **ADCIF** to raise an interrupt, **EIE.ADIE** must also be set.
6	**ADCIF**	R/W	0	ADC interrupt flag. **ADCIF** must be cleared by software. Because the ADC shares an interrupt line with the DES module, **EXIF.ADIF** must also be cleared by software before exiting the interrupt service routine. **EXIF.ADIF** should be cleared first so that the 8051 is ready to receive a new interrupt immediately after **ADCIF** is cleared.
5:0	**ADCDIV**	R/W	0x00	ADC clock divider. Selects ADC clock divider in steps of 16. 000000: Divider is 16 000001: Divider is 32 … 111111: Divider is 1024

ADTRH (0x97) - ADC Threshold Register

Bit	Name	R/W	Reset value	Description
7:0	**ADTRH(7:0)**	R/W	0x00	ADC comparator threshold value, used to generate ADC interrupt or chip reset when the threshold is exceeded.

17. RF Transceiver

17.1 General description

The *CC1010* UHF RF Transceiver is designed for very low power and low voltage applications. The transceiver circuit is mainly intended for the ISM (Industrial, Scientific and Medical) and SRD (Short Range Device) frequency bands at 315, 433, 868 and 915 MHz, but can easily be programmed for operation at other frequencies in the 300-1000 MHz range.

The main operating parameters of *CC1010* can be programmed via Special Function Registers (SFRs), thus making *CC1010* a very flexible and easy to use transceiver.

Very few external passive components are required for operation of the RF Transceiver.

The key parameters for the RF transceiver are listed in Table 6, Table 7, Table 8, Table 9, and Table 10, starting page 8.

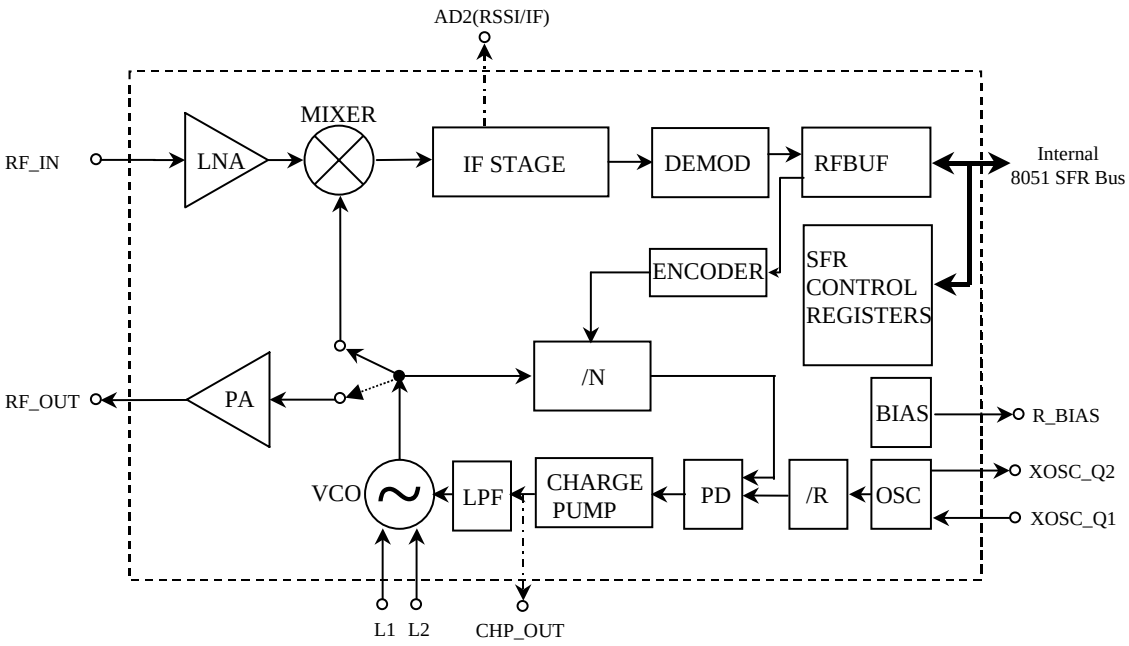

17.2 RF Transceiver Block Diagram

Figure 19. Simplified block diagram of the RF Transceiver

A simplified block diagram of the RF transceiver is shown in Figure 19. Only analog signal pins are shown together with the internal SFR data bus that is used to configure the RF interface and to transmit and receive data.

In receive mode the ***CC1010*** is configured as a traditional super-heterodyne receiver. The RF input signal is amplified by the low-noise amplifier (LNA) and converted down to the intermediate frequency (IF) by the mixer (MIXER). In the intermediate frequency stage (IF STAGE) this down-converted signal is amplified and filtered before being fed to the demodulator (DEMOD). As an option a RSSI signal or the IF signal after the mixer is available at the **AD2(RSSI/IF)** pin. After demodulation the digital data is sent to the **RFBUF** register. Interrupts can be generated for each bit or byte received (**EXIF.RFIF)**.

In transmit mode the voltage controlled oscillator (VCO) output signal is fed directly to the power amplifier (PA). The RF output is frequency shift keyed (FSK) by the digital bit stream fed to the **RFBUF** register. Interrupts can be generated for each bit or byte to be transmitted (**EXIF.RFIF)**. The internal T/R switch circuitry makes the antenna interface and matching very easy using a few passive components.

The frequency synthesiser generates the local oscillator signal which is fed to the MIXER in receive mode and to the PA in transmit mode. The frequency synthesiser consists of a crystal oscillator (XOSC), phase detector (PD), charge pump (CHARGE PUMP), internal loop filter (LPF), VCO, and frequency dividers (/R and /N). An external crystal must be connected to the XOSC. Only one external inductor is required for the VCO.

A detailed pin description is given at page 15.

17.3 RF Application Circuit

Very few external components are required for operation of the RF transceiver. A typical application circuit is shown in Figure 20. Component values are shown in Table 28.

17.3.1 Input / output matching

C31/L32 is the input match for the receiver, and L32 is also used as a DC choke for biasing. C41, L41 and C42 are used to match the transmitter to a 50-Ohm load. An internal T/R switch circuit makes it possible to connect the input and output together and match the transceiver to 50 Ω in both RX and TX mode. See the Input / Output Matching section on page 126 for details.

17.3.2 VCO inductor

The VCO is completely integrated except for the inductor L101.

Component values for the matching network and VCO inductor are easily calculated using the SmartRF® Studio software for any operation frequency.

17.3.3 Additional filtering

Additional external components (e.g. RF LC or SAW-filter) may be used in order to improve the performance in specific applications. See also the Optional LC Filter section on page 128 for further information. If a SAW filter is used, it should be included in the RX path only (an external RX/TX switch should then be used).

17.3.4 Voltage supply decoupling

Voltage supply filtering and de-coupling capacitors must be used (not shown in the application circuit). These capacitors should be placed as close as possible to the voltage supply pins of ***CC1010***.

The placement and size of the decoupling capacitors and power supply filtering are very important to achieve the best sensitivity and lowest possible LO leakage and the reference layouts should be followed.

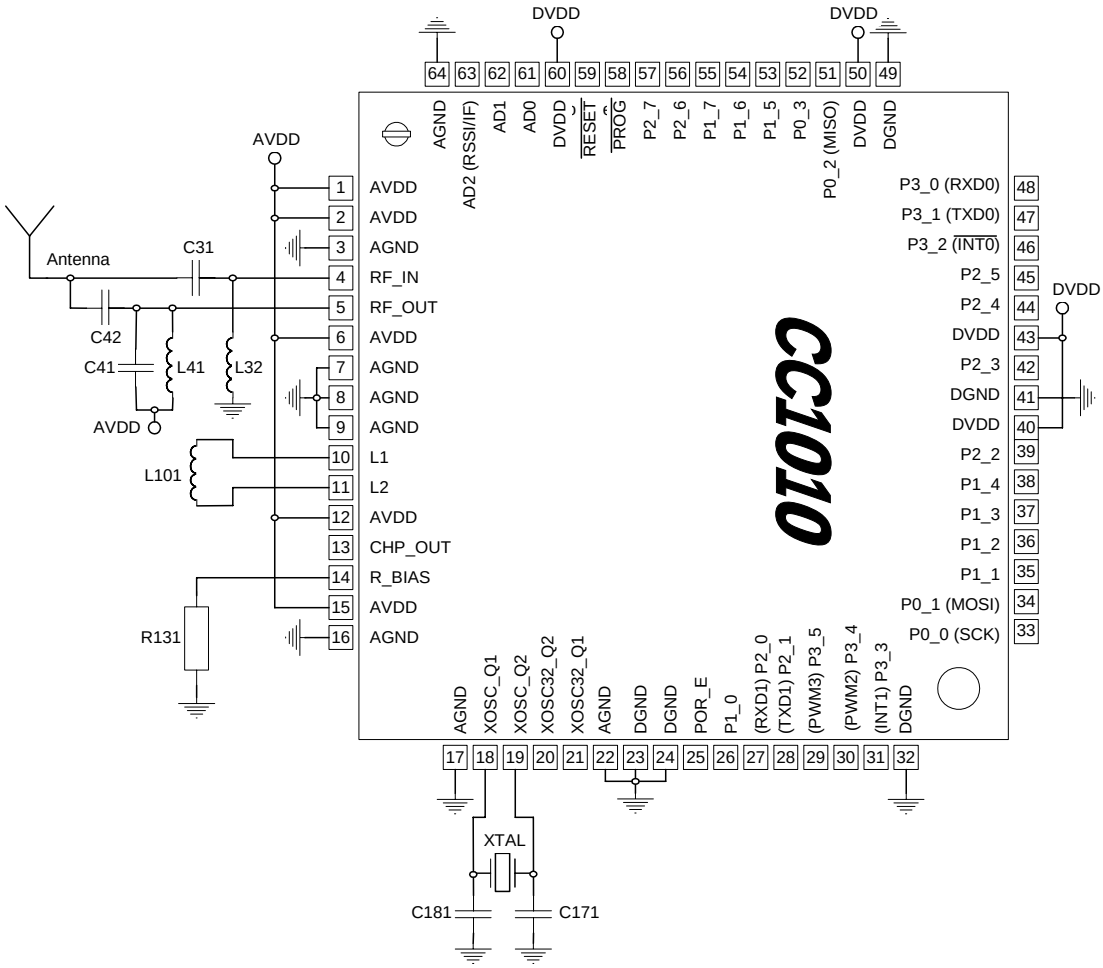

Figure 20. Typical *CC1010* application circuit

Note: Decoupling capacitors not shown. Please see CC1010EM reference design.

Item	433 MHz	868 MHz	915 MHz
C31	10 pF, 5%, C0G, 0603	8.2 pF, 5%, C0G, 0603	8.2 pF, 5%, C0G, 0603
C41	6.8 pF, 5%, C0G, 0603	Not used	Not used
C42	8.2 pF, 5%, C0G, 0603	10 pF, 5%, C0G, 0603	10 pF, 5%, C0G, 0603
C171	18 pF, 5%, C0G, 0603	18 pF, 5%, C0G, 0603	18 pF, 5%, C0G, 0603
C181	18 pF, 5%, C0G, 0603	18 pF, 5%, C0G, 0603	18 pF, 5%, C0G, 0603
L32	68 nH, 10%, 0805 (Coilcraft 0805CS-680XKBC)	12 nH, 10%, 0805 (Coilcraft 0805CS-120XKBC)	12 nH, 10%, 0805 (Coilcraft 0805CS-120XKBC)
L41	6.2 nH, 10%, 0805 (Coilcraft 0805HQ-6N2XKBC)	2.5 nH, 10%, 0805 (Coilcraft 0805HQ-2N5XKBC)	2.5 nH, 10%, 0805 (Coilcraft 0805HQ-2N5XKBC)
L101	27 nH, 5%, 0805 (Koa KL732ATE27NJ)	3.3 nH, 5%, 0805 (Koa KL732ATE3N3C)	3.3 nH, 5%, 0805 (Koa KL732ATE3N3C)
R131	82 kΩ, 1%, 0603	82 kΩ, 1%, 0603	82 kΩ, 1%, 0603
XTAL	14.7456 MHz crystal, 16 pF load	14.7456 MHz crystal, 16 pF load	14.7456 MHz crystal, 16 pF load

Table 28. Bill of materials for the application circuit

Note: Shaded items are different for different frequencies

Note that the component values for 868 and 915 MHz can be the same. However, it is important that the layout is optimised for the selected VCO inductor in order to centre the tuning range around the operating frequency to account for inductor tolerance. The VCO inductor must be placed very close and symmetrical with respect to the pins (L1 and L2).

Chipcon provides reference layouts that should be followed very closely in order to achieve the best performance. The reference design can be downloaded from the Chipcon website.

17.4 Transceiver Configuration Overview

The RF transceiver configuration can be optimised to achieve the best performance for different applications. Through the SFR registers the following key parameters can be programmed:

- Receive / transmit mode
- RF output power
- Frequency synthesiser key parameters: RF output frequency, FSK frequency separation (deviation), crystal oscillator reference frequency
- Power-down / power-up mode
- Data rate and data format (NRZ, Manchester coded, Transparent or UART interface)
- Synthesiser lock indicator mode
- Optional RSSI or external IF output

17.4.1 SmartRF® Studio

Chipcon provides users of ***CC1010*** with a Windows application, SmartRF® Studio, which generates all necessary ***CC1010*** RF configuration settings based on the user's selections of various parameters. These SFR register settings can be used in a ***CC1010*** program to configure the RF. In addition SmartRF® Studio will provide the user with the component values needed for the input/output matching circuit and the VCO inductor.

Chipcon recommends using the register settings found using the SmartRF® Studio software. These are the register settings that Chipcon can guarantee across temperature, voltage and process. Please visit the Chipcon web site regularly for updates to the SmartRF® Studio software, or subscribe to the Chipcon Developer's Newsletter to be notified of updates.

Figure 21 shows the user interface of SmartRF® Studio.

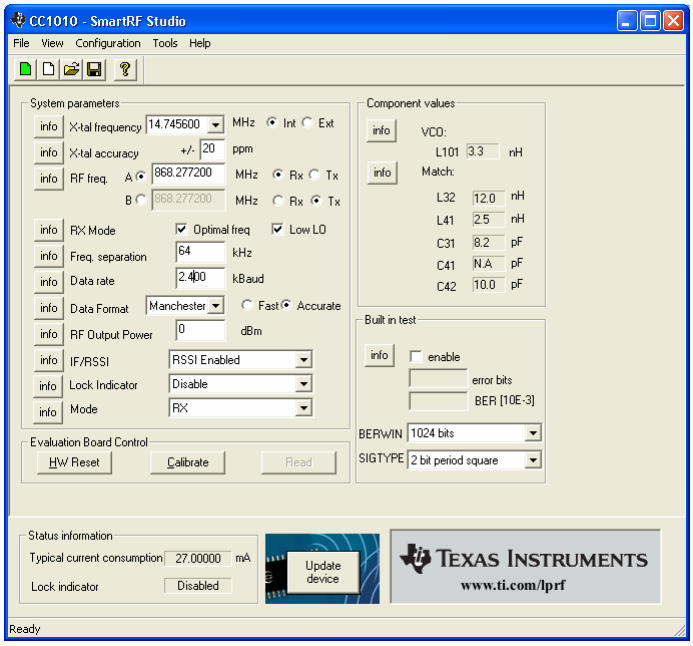

Figure 21. SmartRF® Studio

17.5 RF Transceiver RX/TX control and power management

The **RFMAIN** register controls the operation mode (RX or TX), use of the dual frequency registers and several power down modes. In this way the *CC1010* offers great flexibility for RF power management in order to meet strict power consumption requirements in battery-operated applications. Different power-down modes are controlled through individual bits in the **RFMAIN** register. There are separate bits to control the RX part, the TX part, the frequency synthesiser and the crystal oscillator. This individual control can be used to optimise for lowest possible current consumption in a certain application.

A typical power-on sequence for minimum power consumption is shown in Figure 22. The figure assumes that frequency A is used for RX and frequency B is used for TX. If this is not the case, simply invert the **F_REG** setting.

RFMAIN (0xC8) - RF Main Control Register

Bit	Name	R/W	Reset value	Description
7	**RXTX**	R/W	0	RX/TX Switch. 0 : RX 1 : TX
6	**F_REG**	R/W	0	Select the frequency registers A or B 0 : Select frequency registers A 1 : Select frequency registers B
5	**RX_PD**	R/W	1	Select power down for the LNA, mixer, IF filter and digital demodulator. 0 : Power up 1 : Power down
4	**TX_PD**	R/W	1	Select power down of the digital modem and PA. 0 : Power up 1 : Power down
3	**FS_PD**	R/W	1	Select power down of the frequency synthesizer 0 : Power up 1 : Power down
2	**CORE_PD**	R/W	0	Power down of main crystal oscillator core. 0 : Power up 1 : Power down
1	**BIAS_PD**	R/W	0	Power down of bias current generator and crystal oscillator buffer. 0 : Power up 1 : Power down
0	**-**	R0	0	Reserved, read as 0

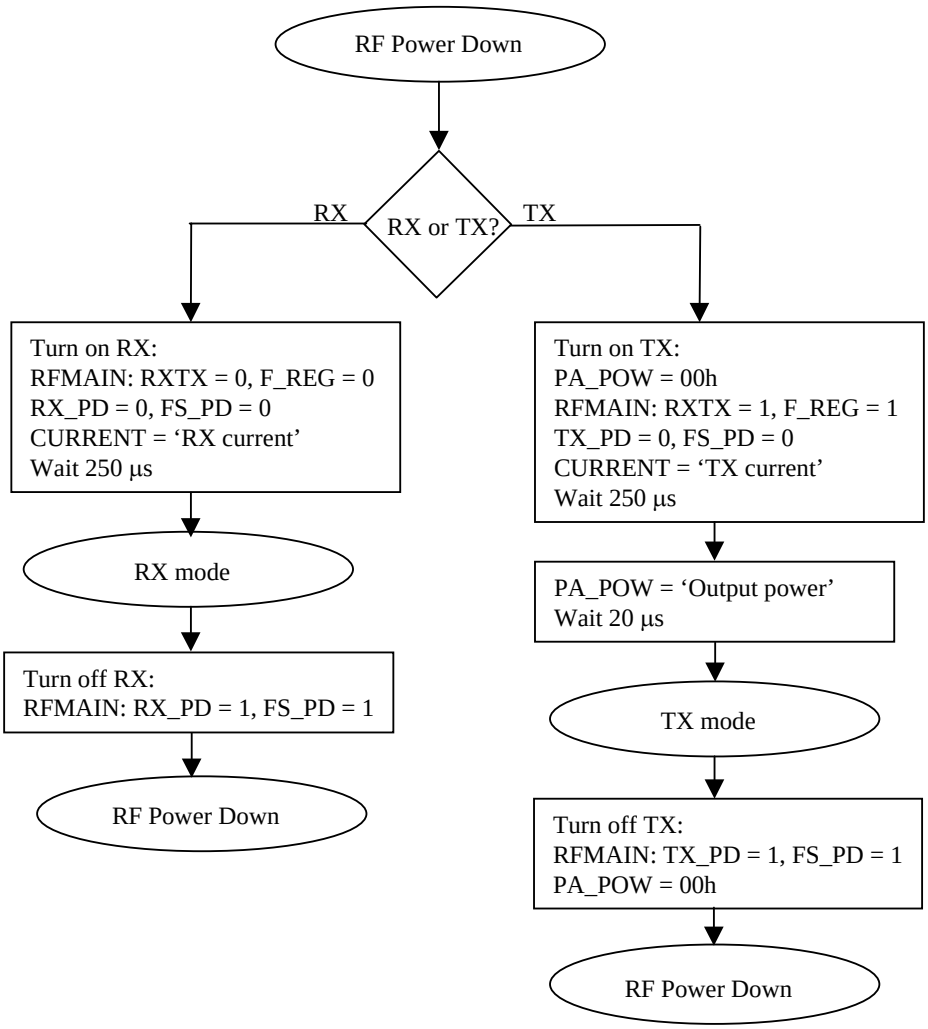

Figure 22. RF Transceiver power-on sequence

17.6 Data Modem and Data Modes

Four different data modes are defined for transmission and reception, programmable through **MODEM0.DATA_FORMAT**. These modes differ in data encoding, how incoming and outgoing data is delivered and accepted, and whether resynchronisation of the bitstream is performed (clock regeneration) or not. The data format should be selected before enabling the RF Transceiver

Two of the modes, *Synchronous NRZ mode* and *Synchronous Manchester encoded mode,* transmit or receive data using a baudrate as specified in **MODEM0.BAUDRATE**. The modem does resynchronisation of the bit stream during reception. In the Manchester mode the modem also does the Manchester encoding and decoding. The NRZ and Manchester modes accept and deliver data either one bit or one byte at a time, programmable through **RFCON.BYTEMODE**. In most applications these two modes are recommended.

Data to be transmitted or data received are stored in the **RFBUF** register. During transmission or reception the need for more data or the arrival of new data, bit by bit or byte by byte depending on **RFCON.BYTEMODE**, is signaled by generating an interrupt (**EXIF.RFIF**.) Depending on whether the RF interrupt is enabled or not (**EIE.RFIE**), transmission or reception can be handled by an interrupt service routine or be performed by polling.

During reception when using *NRZ* or *Manchester* mode, hardware preamble and start of frame detection can optionally be activated using the registers **PDET** and **BSYNC**. This is described in the Synchronization and preamble detection section on page 102.

Two other modes, *Transparent mode* and *UART mode*, simply passes data between the FSK modem and the **RFBUF** register and UART0, respectively, allowing custom baud rates and data encoding. When using the UART0 in the UART mode the pin **P3.1** is not used for UART output and can instead be used for general I/O.

Chipcon strongly recommends that the synchronous modes be used. The other data modes bypass the data decision circuitry of the RF transceiver and do not support *bytemode*. The *Transparent mode* is only intended for testing.

17.6.1 Manchester encoding

In Manchester mode the data clock is transmitted along with the data. A '1' is encoded as a high frequency f_1 followed by a lower frequency f_0. A '0' is encoded as a low frequency f_0 followed by a higher frequency f_1. This is illustrated in Figure 23. See the Frequency programming section on page 106 for definitions of f_0 and f_1.

The Manchester code ensures that the signal has a constant DC component, which is necessary in some FSK demodulators. Using this mode also ensures compatibility with ***CC400*** / ***CC900*** designs.

The properties of the different data modes are summarized in Table 29.

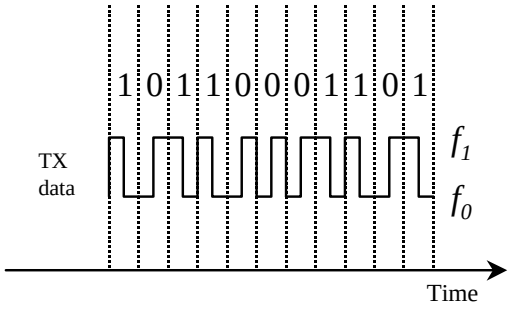

Figure 23. Manchester encoding

	Transparent mode	UART mode	Synchronous Manchester encoded mode	Synchronous NRZ mode
Baudrate configuration	User defined	Defined by UART through Timer 1	Generated by hardware, as defined by **MODEM0.BAUDRATE**	
Data encoding	User defined	Defined by UART settings	Manchester encoding. Bitrate is half of baudrate.	None (NRZ)
Data Input & Output	**RFBUF(0)**	N/A	**RFBUF** in bytemode, **RFBUF(0)** in bitmode.	
Clock Regeneration	N/A	Performed by UART	Performed internally. A violation to the Manchester coding format is reported in **RFCON.MVIOL**.	Performed by hardware
Bitmode/ Bytemode	N/A	N/A	Both possible. Bytemode is forced when using preamble detection	
Preamble detection	N/A	N/A	If **PDET.PEN**=1 a configurable number of alternating '0's and '1's (**PDET.PLEN**) followed by a one-byte start of frame delimiter as defined in **BSYNC** is needed to trigger reception. Bytemode is forced when **PDET.PEN**=*1.*	

Table 29. Properties of different data modes (MODEM0.DATA_FORMAT)

MODEM0 (0xDB) - Modem Control Register 0

Bit	Name	R/W	Reset value	Description
7:5	**BAUDRATE(2:0)**	R/W	011	000 : 0.6 kBaud 001 : 1.2 kBaud 010 : 2.4 kBaud 011 : 4.8 kBaud 100 : 9.6 kBaud 101 : 19.2, 38.4 and 76.8 kBaud 110 : Not used 111 : Not used
4:3	**DATA_FORMAT (1:0)**	R/W	10	00 : NRZ mode 01 : Manchester mode 10 : Transparent mode 11 : UART mode
2:0	**XOSC_FREQ (2:0)**	R/W	001	Select the current crystal oscillator frequency. 000 : 3-4 MHz, 3.6864 MHz recommended Also used for 76.8 kBaud for 14.7456 MHz and 38.4 kBaud for 7.3728 MHz 001 : 6-8 MHz, 7.3728 MHz recommended Also used for 38.4 kBaud for 14.7456 MHz 010 : 9-12 MHz, 11.0592 MHz recommended Also used for 38.4 kBaud for 22.1184 MHz 011 : 12-16 MHz, 14.7456 MHz recommended 100 : 16-20 MHz, 18.4320 MHz recommended 101 : 20-24 MHz, 22.1184 MHz recommended 110 : Reserved for future use 111 : Reserved for future use

17.7 Baud rates

Baud rates from 0.6 kBaud to 76.8 kBaud are programmable in the **MODEM0.BAUDRATE** control bits. **MODEM0.XOSC_FREQ** must also be set according to the crystal in use. Baud rates are generated as follows:

$$RF\_BAUDRATE = \frac{2^{BAUDRATE}}{(XOSC\_FREQ + 1)} \cdot \frac{f_{xosc}}{3.6864\,MHz} \cdot 0.6\ \ kBaud$$

RF_BAUDRATE is the output baud rate in kBaud, **BAUDRATE** and **XOSC_FREQ** are control bits in **MODEM0**. Using one of the standard crystals mentioned in the **MODEM0.XOSC_FREQ** description will produce the standard baud rates 0.6, 1.2, 2.4, 4.8, 9.6, 19.2, 38.4 or 76.8 kBaud. Other crystal frequencies will scale the baud rate as described above.

Baud rates up to and including 19.2 kBaud can be generated for any crystal frequency. Above 19.2 kBaud a few combinations are possible, as shown in Table 30.

MODEM0. BAUDRATE /XOSC.FREQ	**f_{xosc} [MHz]**					
RF_BAUDRATE [kBaud]	**3.6864**	**7.3728**	**11.0592**	**14.7456**	**18.4320**	**22.1184**
0.6	0/0	0/1	0/2	0/3	0/4	0/5
1.2	1/0	1/1	1/2	1/3	1/4	1/5
2.4	2/0	2/1	2/2	2/3	2/4	2/5
4.8	3/0	3/1	3/2	3/3	3/4	3/5
9.6	4/0	4/1	4/2	4/3	4/4	4/5
19.2	5/0	5/1	5/2	5/3	5/4	5/5
38.4	NA	5/0	NA	5/1	NA	5/2
76.8	NA	NA	NA	5/0	NA	NA

Table 30. Baud rates versus crystal frequency

17.8 Transmitting and receiving data

In the Transparent or UART modes outgoing and incoming data is routed directly to the modulator in transmit mode and directly from the demodulator in receive mode. In the NRZ and Manchester modes, however, data buffering occurs in **RFBUF** as illustrated in Figure 24. This buffering has some repercussions that must be considered when receiving or transmitting data, particularly in *bytemode*.

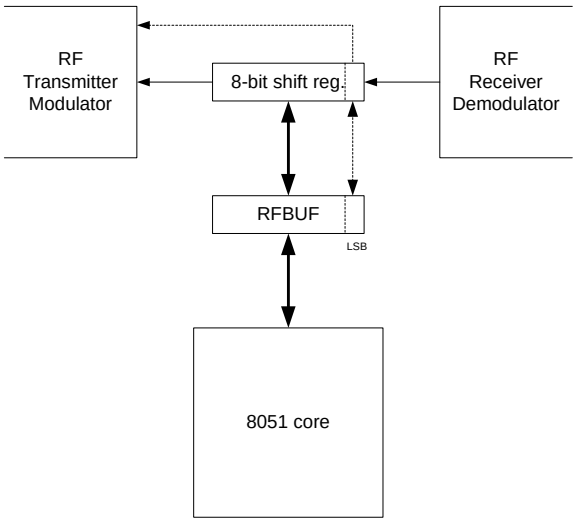

Figure 24. RF Data Buffering. Dotted lines show bitmode

RFBUF (0xC9) - RF Data Buffer

Bit	Name	R/W	Reset value	Description
7:0	**RFBUF**	R/W	0x00	RF Data Buffer, 8 bits. **RFBUF** is used as described below.

17.8.1 Transmission

When transmitting data in *bytemode* (**RFCON.BYTEMODE=1**), the buffering scheme shifts out bits of an 8-bit shift register to the modulator one at a time, MSB first, at periods specified by the selected baud rate. When this shift register is empty it will load a new byte from **RFBUF** and continue shifting out bits. The contents of the **RFBUF** register remain unchanged after a shift register load. An interrupt request is generated (**EXIF.RFI**) so that **RFBUF** can be loaded with a new data byte.

If a new byte is not written within eight bit periods (eight baud periods in *NRZ* mode and 16 baud periods in *Manchester* mode), the next time the shift register is empty it will load the same byte from **RFBUF** again. E.g. when transmitting a preamble consisting of alternating '0' and '1', it is only necessary to write the byte to **RFBUF** once and then wait the desired number of byte cycles for the preamble to be transmitted.

In *bitmode* (**RFCON.BYTEMODE=0**), the same buffering occurs, but only for one bit at a time. Thus, the shift register will load a new bit from **RFBUF.0** after each transmitted bit, which in turn generates a RF-interrupt request so that a new bit can be loaded. In order to be able to write the next bit to **RFBUF.0** within one bit period at high baud rates, it is advisable to use a

tight polling loop instead of an interrupt based transmit procedure.

In order to start transmission of data as quickly as possible, the first bit/byte to be transmitted should be written to **RFBUF** before the modulator is turned on (**RFMAIN.TX_PD=0**). It will then be immediately loaded into the shift register and an interrupt request will be generated for the second bit/byte.

It is especially important to take the buffering scheme into account at the end of a transmission. When the last byte of a data frame or packet is loaded into the shift register it is still not transmitted. Thus the interrupt request generated at the same time must not turn off either analog or digital parts of the transmit chain. The transmission can not be ended safely until nine bit periods later in *bytemode* and two bit periods later in *bitmode*, when the last bit has been shifted out and has propagated through the transmit chain to the antenna. A simple solution is to always transmit two extra bytes in *bytemode* or two extra bits in *bitmode* at the end of the real data content. (In *bytemode* this will result in that approximately seven of these bits will be transmitted along with the real data.) This should cause no problems in practice.

17.8.2 Reception

When receiving data the buffering scheme works in reverse of what it does during transmitting. Bit by bit from the demodulator is shifted into the eight-bit shift register, MSB-first: When the shift register is full it is loaded into **RFBUF** and an interrupt request is generated (**EXIF.RFIF**). The byte must be read within one byte period (eight baud periods in *NRZ* mode and 16 baud periods in *Manchester* mode). If not, it will be overwritten by the next byte received and the data is lost.

In *bitmode* the same buffering occurs, but only for one bit at a time. Thus, when a new bit arrives from the demodulator the shift register will store it and store the last bit into **RFBUF.0**, which in turn generates a RF-interrupt request so that the new bit can be read. In order to be able to read the next bit from **RFBUF.0** within one bit period at high baud rates it is advisable to use a tight polling loop instead of an interrupt based receive procedure.

No special considerations have to be taken at the start of, or end of, receptions.

17.9 Demodulation and data decision

A block diagram of the digital demodulator is shown in Figure 25. The IF signal is sampled and its instantaneous frequency is detected. The result is decimated and filtered. In the data slicer the data filter output is compared to the average filter output to generate the data output.

The averaging filter is used to find the average value of the incoming data. While the averaging filter is running and acquiring samples, it is important that the number of high and low bits received is equal (e.g. Manchester code or a balanced preamble).

Therefore all modes, also synchronous NRZ mode, need a DC balanced preamble for the internal data slicer to acquire correct comparison level from the averaging filter. The suggested preamble is a '010101…' bit pattern. The same bit pattern should also be used in Manchester mode, giving a '011001100110…chip pattern. This is necessary for the bit synchronizer to synchronize correctly.

The averaging filter must be locked before any NRZ data can be received. This can be done in one of two ways:

- After receiving the preamble and byte synchronisation (see the Synchronization and preamble detection section on page 102), set **MODEM1.LOCK_AVG_IN**='1' to stop updating the averaging filter.
- Set **MODEM1.LOCK_AVG_MODE**='1', and then enter Receive mode (**RFMAIN.RX_PD**='0'). The averaging filter will then be automatically locked after a preset number of baud periods, programmable in **MODEM1.SETTLING**. The settling time is programmable from 11 to 86 bauds. The average filter lock status can be read through **MODEM1.AVG_FILTER_STAT.**
  Please note that the locking is only automatic in that the lock is enabled the programmed number of bit periods after receive mode is entered. The automatic locking should therefore only be used in situations where the transceiver will be switched away from receive mode as soon as it is determined that no data is present.

If the averaging filter is locked (**MODEM1.LOCK_AVG_MODE**='1'), the acquired value will be kept also after Power Down or Transmit mode.

After a modem reset (**MODEM1.MODEM_RESET_N**), or a main reset (using any of the standard reset sources), the averaging filter is reset.

In a polled receiver system the automatic locking can be used. This is illustrated in Figure 26. If the receiver is operated continuously and searching for a preamble, the averaging filter should be locked manually as soon as the preamble is detected. This is shown in Figure 27. If the data is Manchester coded there is no need to lock the averaging filter (**MODEM1.LOCK_AVG_IN**='0'), as shown in Figure 28.

The minimum length of the preamble depends on the acquisition mode selected and the settling time. Table 31 gives the minimum recommended number of chips for the preamble in NRZ and UART modes. In this context 'chips' refer to the data coding. Using Manchester coding every bit consists of two 'chips'. For Manchester mode the minimum recommended number of chips is shown in Table 32.

A special feature in the data filter is a peak remover acting like a low pass filter. The peak threshold must be programmed according to the deviation and expected frequency drift. When **MODEM1.PEAKDETECT** is enabled, **MODEM2.PLO** should be set such that:

$$PLO = \frac{f_S}{IF_{low}} - \frac{f_s}{IF_{low} + \Delta f/2} \cdot \frac{5}{8}$$

where

$$f_s = \frac{f_{XOSC}}{MODEM0.XOSC\_FREQ + 1}$$

$$IF_{low} = 150kHz - 2 \cdot f_{RF} \cdot XTAL\_accuracy$$

and Δf is the deviation. SmartRF® Studio may be used to configure this correctly.

It is important that the peak detector is programmed with a correct value; an error may result in incorrect data reception.

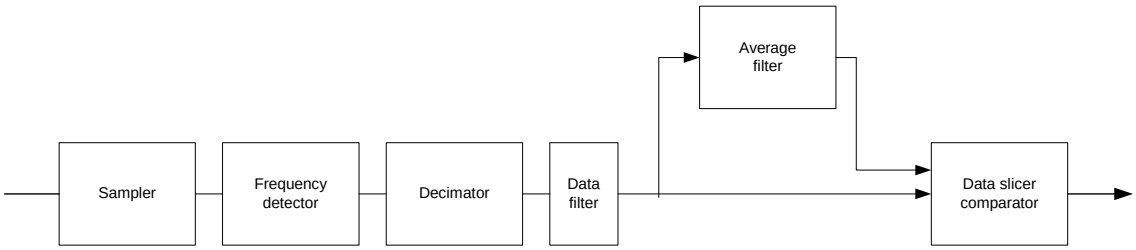

Figure 25. Demodulator block diagram

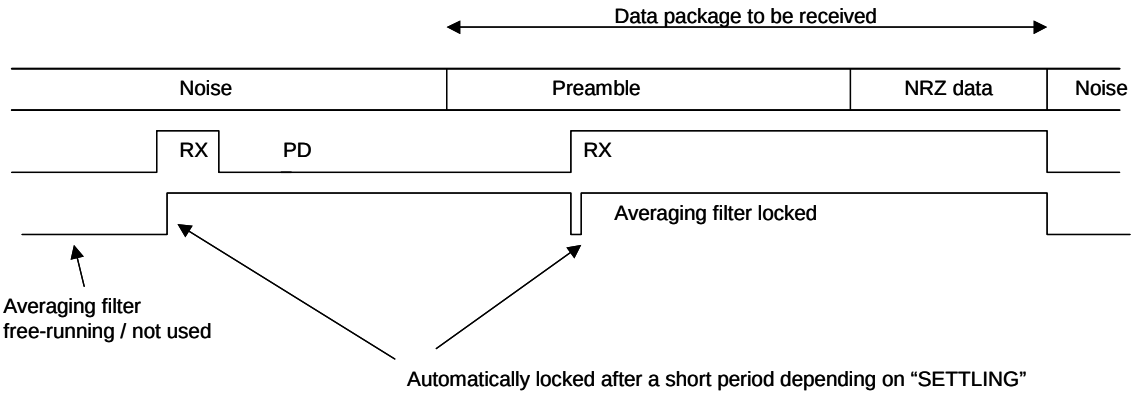

Figure 26. Automatic locking of the averaging filter

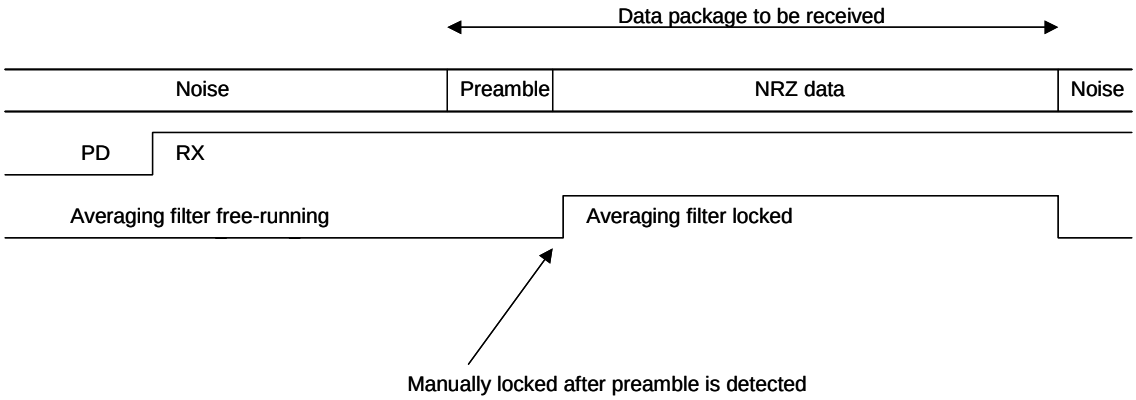

Figure 27. Manual locking of the averaging filter

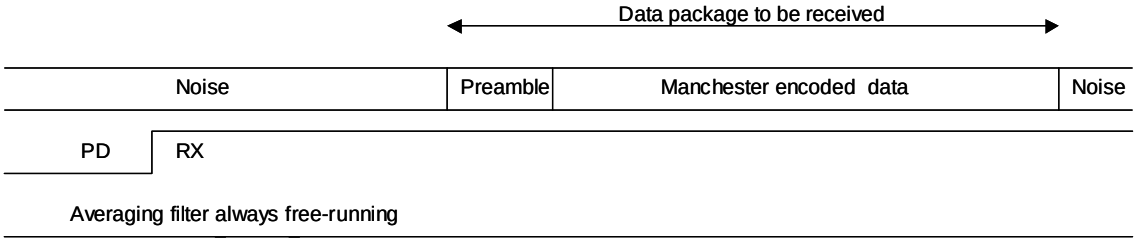

Figure 28. Free-running averaging filter

Settling **MODEM1.SETTLING (1:0)**	Manual Lock		Automatic Lock	
	NRZ mode **MODEM1.LOCK_AVG_MODE**='1' **MODEM1.LOCK_AVG_IN**='0'=→'1'**	**UART mode** **MODEM1.LOCK_AVG_MODE**='1' **MODEM1.LOCK_AVG_IN**='0'=→'1'**	**NRZ mode** **MODEM1.LOCK_AVG_MODE**='0' **MODEM1.LOCK_AVG_IN**='X'***	**UART mode** **MODEM1.LOCK_AVG_MODE**='0' **MODEM1.LOCK_AVG_IN**='X'***
00	14	11	16	16
01	25	22	32	32
10	46	43	64	64
11	89	86	128	128

Table 31. Minimum preamble bits for locking the averaging filter, NRZ and UART mode

Notes:
** The averaging filter is locked when **MODEM1.LOCK_AVG_IN** is set to 1
*** X = Do not care. The timer for the automatic lock is started when RX mode is set in the **RFMAIN** register
Also please note that in addition to the number of bits required to lock the filter, you need to add the number of bits needed for the preamble detector. See the next section for more information.

Settling **MODEM1.SETTLING (1:0)**	Free-running Manchester mode **MODEM1.LOCK_AVG_MODE**='1' **MODEM1.LOCK_AVG_IN**='0'
00	23
01	34
10	55
11	98

Table 32. Minimum number preamble chips for averaging filter, Manchester mode

MODEM1 (0xDA) - Modem Control Register 1

Bit	Name	R/W	Reset value	Description
7	**-**	R0	0	Reserved, read as 0
6	**LOCK_AVG_IN**	R/W	0	Lock control bit of average filter 0 : Average Filter is free-running, used for receiving zero average data (e.g. Preamble or Manchester encoded data) 1 : Lock average filter, used for NRZ data
5	**LOCK_AVG_MODE**	R/W	1	Automatic lock of average filter 0 : Lock of Average Filter is controlled automatically, use when zero average data is present when the receiver is turned on 1 : Lock of Average Filter is controlled by **LOCK_AVG_IN**
4	**LOCK_AVG_STAT**	R	0	Average filter status bit 0 : Average filter is free running 1 : Average filter is locked
3:2	**SETTLING(1:0)**	R/W	11	Settling time of average filter 00 : 11 baud settling time, worst case 1.2dB loss in sensitivity 01 : 22 baud settling time, worst case 0.6dB loss in sensitivity 10 : 43 baud settling time, worst case 0.3dB loss in sensitivity 11 : 86 baud settling time, worst case 0.15dB loss in sensitivity
1	**PEAKDETECT**	R/W		Peak detector and remover enable / disable 0 : Peak detector and remover is disabled. 1 : Peak detector and remover is enabled
0	**MODEM_RESET_N**	R/W		Separate reset of the MODEM. 0 : The Modem is reset 1 : The Modem reset is released

MODEM2 (0xD9) - Modem Control Register 2

Bit	Name	R/W	Reset value	Description
7	**-**	R0	0	Reserved, read as 0
6:0	**PLO(6:0)**	R/W	0x16	Peak Level Offset, threshold level for peak the peak detector and remover in the demodulator, which is activated when **MODEM1.PEAKDETECT** is set. **PLO** should be set as described on page 97.

RFCON (0xC2) - RF Control Register

Bit	Name	R/W	Reset value	Description
7:5	**-**	R0	0	Reserved, read as 0
4	**MVIOL**	R	0	Manchester code violation status of current bit in bitmode or the aggregate-OR of the Manchester code status of all bits in the current byte in bytemode. Only valid when **MODEM0.DATA_FORMAT**=01 (Manchester encoding)
3:1	**MLIMIT(2:0)**	R/W	011	Limit value used by the clock regeneration logic in *Manchester* mode to determine whether the current symbol constitutes a Manchester code violation. The violation detection is determined by how balanced the bit is by looking at the 14 samples. A perfect bit is 14 (all samples are correct). The limit can be set from 1 to 7 (001 – 111). 0 disable the violation detection function.
0	**BYTEMODE**	R/W	0	Select bit or bytemode 0 : Bitmode is enabled. Data is transmitted and received bit by bit through **RFBUF.0** 1 : Bytemode is enabled. Data is transmitted and received byte by byte through **RFBUF**, with MSB first. **BYTEMODE** is ignored if **PDET.PEN** = 1

17.10 Synchronization and preamble detection

Most RF communication protocols will have a preamble designated to let the receiver synchronise reception on a bit and byte level. ***CC1010*** contains hardware that will perform these tasks easily in synchronous NRZ and Manchester encoded modes.

The byte synchronization mechanism ensures that the framing of bytes in the received data bit stream is correct, thus freeing the software from needing to perform shifting and recombination of data bytes. In addition, the synchronization byte functions as a start of frame delimiter. The preamble detection mechanism reduces the workload for the processor when the exact time of the start of a transmission is uncertain. Both mechanisms are active when **PDET.PEN** is set. (See **PDET** register definition below.) Two preamble examples are shown in Figure 29. Note that the Manchester baud rate is twice the NRZ baud rate in the figure.

The preamble must consist of an alternating 0-1-pattern followed by a synchronization byte of eight bits. Unless the average filter is already locked at the arrival of the synchronization byte in NRZ mode, it is vital that the synchronization byte is DC-balanced (equal number of zeros and ones) and contains no more than two consecutive ones or zeros. It is also required that the synchronization byte contains two consecutive ones or zeros. This means that e.g. 0xCC is not a legal synchronization byte, but 0xCA is.

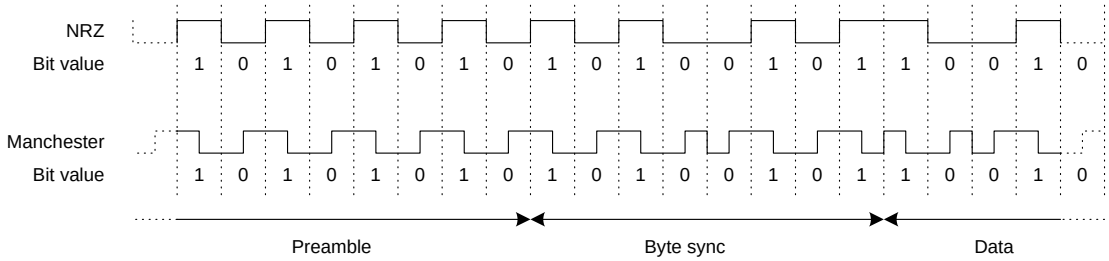

Figure 29. Preamble detection examples

PDET (0xD3) - Preamble Detection Control Register

Bit	Name	R/W	Reset value	Description
7	**PEN**	R/W	0	Preamble and byte synchronisation enable. 0 : Receiver mode is defined by **RFCON.BYTEMODE**. 1 : Preamble and byte synchronisation is enabled. **RFCON.BYTEMODE** is don't care.
6:0	**PLEN**	R/W	0x00	Preamble length. Define the number of alternating bits required before byte synchronisation. **PLEN** must be greater than zero.

BSYNC (0xD4) - Byte Synchronisation Register

Bit	Name	R/W	Reset value	Description
7:0	**BSYNC(7:0)**	R/W	0x00	**BSYNC** defines the byte that triggers byte synchronisation during RF preamble detection.

The hardware support for preamble detection consists of a seven-bit counter, which keeps track of the number of successive alternating bits. It is reset

whenever two bits are equal and incremented whenever two successive bits are different. The counter is limited and will not overflow. A seven-bit threshold is programmable through **PDET.PLEN**. Not until this counter equals or exceeds **PDET.PLEN** will a synchronization byte be accepted. ***CC1010*** is able to detect preambles (including the synchronization byte) with minimum lengths from 10 to 135 bits.

When the requisite number of alternating zeros and ones has been received, a special state is entered where a deviation from the 0-1-pattern is searched for. Once a bit does not correspond to the alternating bits pattern, a synchronization byte matching that defined in **BSYNC** must occur within a maximum of seven bits, otherwise the receiver will reset its preamble counter and go back to the preamble detection mode.

If, however, a match is found before the timeout, the synchronization byte is transferred to **RFBUF** and an **EXIF.RFIF** interrupt request generated, after which the receiver enters normal reception mode. For both the examples shown in Figure 29, **BSYNC** should be set to 10100101 (0xA5).

PDET.PEN is not cleared by hardware when the preamble is detected, but it will not affect the reception of data. It can be cleared or left set, decided by what is more practical for the software developer. However, before a new preamble detection session is initiated, **PDET.PEN** must be cleared.

If manual average filter locking is performed, the average filter should be locked after receiving the synchronization byte in *NRZ* mode. (See the Reception section on page 96 for details.) As mentioned above it is vital that the synchronization byte is DC-balanced and contains no more than two consecutive ones or zeros in order to achieve a good average filter lock in this case.

17.10.1 Estimating the required preamble length

The preamble length is determined by several factors. First, the receiver circuitry needs some time to settle. Second, the averaging filter must acquire a correct value. Third, the preamble detection circuit must receive the required number of bits.

The first factor depends on the data rate and will be limited to only a few bits. The number of bits required by the averaging filter is a bit tricky to calculate, but estimates of the maximum bound are given in Table 31 and Table 32. The number of bits required will vary because the updating of the averaging filter is not synchronised to the start of the transmission. RF noise can complicate the issue further.

To determine an approximate preamble length, add the estimated number of bits required by the averaging filter with the preamble detector setting. Round the number of bits up to the closest multiple of 8 and use this as a starting point. For time-critical applications where it is important to use as short preamble as possible, the preamble length should be optimized by experimentation.

17.10.2 Manchester violations

In some RF-applications using Manchester coding, violations of the Manchester coding have been used for start- and end-of-frame delimiters. Furthermore some implementations use a sequence of all ones or all zeros for a preamble instead of an alternating zero-one sequence. Although an all zero or all one sequence will certainly be DC-balanced once Manchester coded, the receiver is unable to decide whether it is receiving an all zero or an all one sequence, since only the bit synchronization will separate these.

In order to facilitate reception and transmission of such special cases, support has been implemented in ***CC1010*** for allowing the data format to be changed in the middle of a reception or transmission. Furthermore, violations of the Manchester coding format is reported in the status bit **RFCON.MVIOL**. The

Texas Instruments

threshold for determining what constitutes a Manchester coding violation can be configured in **RFCON.MLIMIT**. **RFCON.MVIOL** is set when, in *bitmode*, the currently available bit in **RFBUF.0** was determined to violate Manchester coding, or in *bytemode*, when one or more of the bits in the byte currently available in **RFBUF** were determined to violate the Manchester coding. This can be used, for example, to detect start of frame and end of frame delimiter bytes.

Note that even if **RFCON.MVIOL** is set when receiving data, **RFBUF** will still be set to the "best guess" data received. In applications where no Manchester violations are transmitted, it is therefore advisable to ignore **RFCON.MVIOL** at reception.

In order to be able to send Manchester violations, **MODEM0.DATA_FORMAT** must be changed to *NRZ mode* for the byte in question. When in *NRZ* mode, two bytes must be sent for each Manchester-coded byte. A flagrant violation of Manchester coding could be, for example, the two-byte sequence "11001100"-"00110011". In order to provide this functionality, **MODEM0.DATA_FORMAT** is buffered in much the same way as data so that the change does not take effect until the following byte.

During transmission, the desired data format should be updated in connection with writing new data to **RFBUF**. The byte currently being transmitted from the shift register will not be affected. It is then possible to have a NRZ preamble pattern with Manchester data following. This is illustrated in Figure 30.

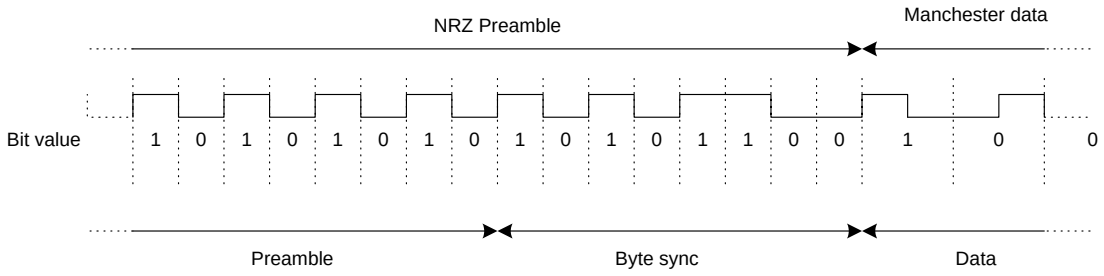

Figure 30. Switching data mode after preamble

Changing the desired data mode during reception of NRZ preamble and Manchester data is straightforward. A new value of **MODEM0.DATA_FORMAT** does not take effect before an RF interrupt request is generated. After having started a reception using preamble detection/byte synchronization and the *NRZ* data mode, the **DATA_FORMAT** should be set to *Manchester*. The whole preamble detection process will then work with *NRZ* data and the new **DATA_FORMAT** will not take effect until a valid (*NRZ*) synchronization byte is found and an interrupt request generated.

It is not recommended to change the data format during reception for new protocols, but the functionality is included for compatibility with existing protocols.

17.11 Receiver sensitivity versus data rate and frequency separation

The receiver sensitivity depends on the data rate, the data format, FSK frequency separation and the RF frequency. Typical figures for the receiver sensitivity (BER = 10^{-3}) are shown in Table 33 for 64 kHz frequency separations and in Table 34 for 20 kHz. Optimised sensitivity configurations are used. For best performance the frequency separation should be as high as possible especially at high data rates.

Figure 31 and Figure 32 show typical figures for how sensitivity varies as a function of the frequency offset between the transmitter and the receiver.

Data rate [kBaud]	Separation [kHz]	433 MHz		868 MHz	
		NRZ mode	Manchester mode	NRZ mode	Manchester mode
0.6	64	-109	-108	-106	-106
1.2	64	-107	-106	-104	-104
2.4	64	-105	-105	-101	-103
4.8	64	-104	-103	-98	-100
9.6	64	-102	-101	-96	-98
19.2	64	-100	-99	-96	-96
38.4	64	-97	-98	-94	-94
76.8	64	-96	-96	-93	-93

Table 33. Typical receiver sensitivity as a function of data rate at 433 and 868 MHz, BER = 10-3, frequency separation 64 kHz

Data rate [kBaud]	Separation [kHz]	433 MHz		868 MHz	
		NRZ mode	Manchester mode	NRZ mode	Manchester mode
0.6	20	-105	-105	-100	-102
1.2	20	-104	-103	-99	-101
2.4	20	-101	-101	-97	-99
4.8	20	-98	-100	-96	-98
9.6	20	-98	-99	-94	-96
19.2	20	-97	-98	-94	-94
38.4	20	N/R	N/R	N/R	N/R
76.8	20	N/R	N/R	N/R	N/R

Table 34. Typical receiver sensitivity as a function of data rate at 433 and 868 MHz, BER = 10-3, frequency separation 20 kHz

N/R = Not recommended (data rate too high compared to frequency separation)

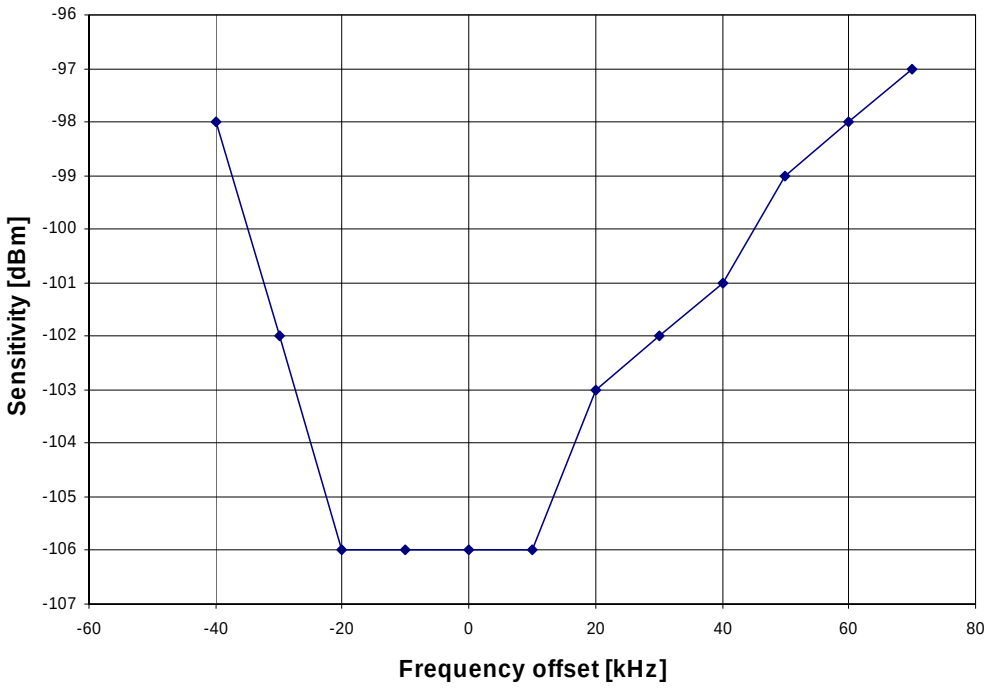

Figure 31. Sensitivity versus frequency offset, 868 MHz, 2.4 kBaud Manchester

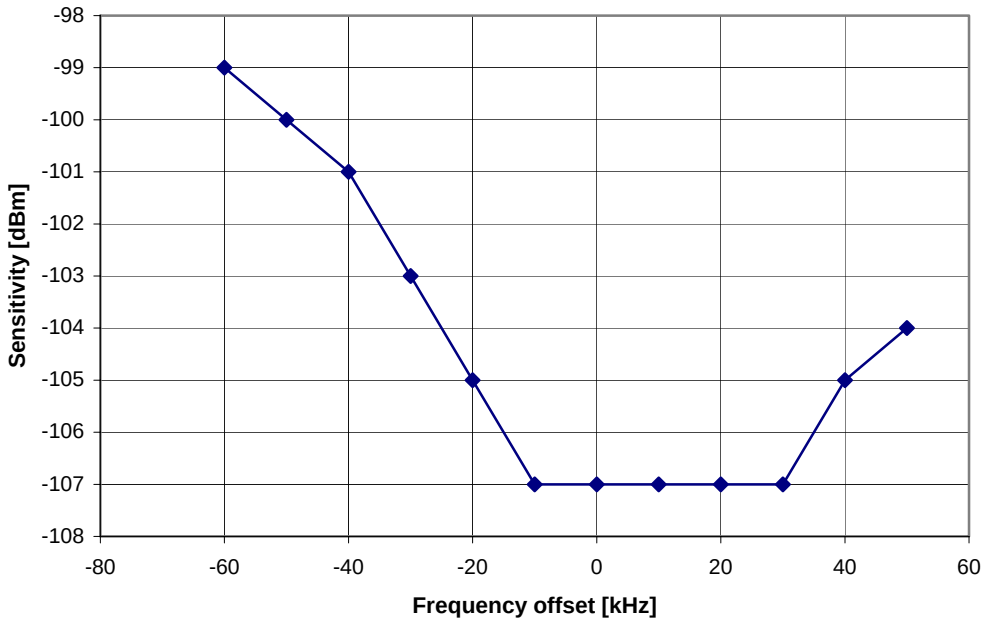

Figure 32. Sensitivity versus frequency offset, 433 MHz, 2.4 kBaud Manchester

17.12 Frequency programming

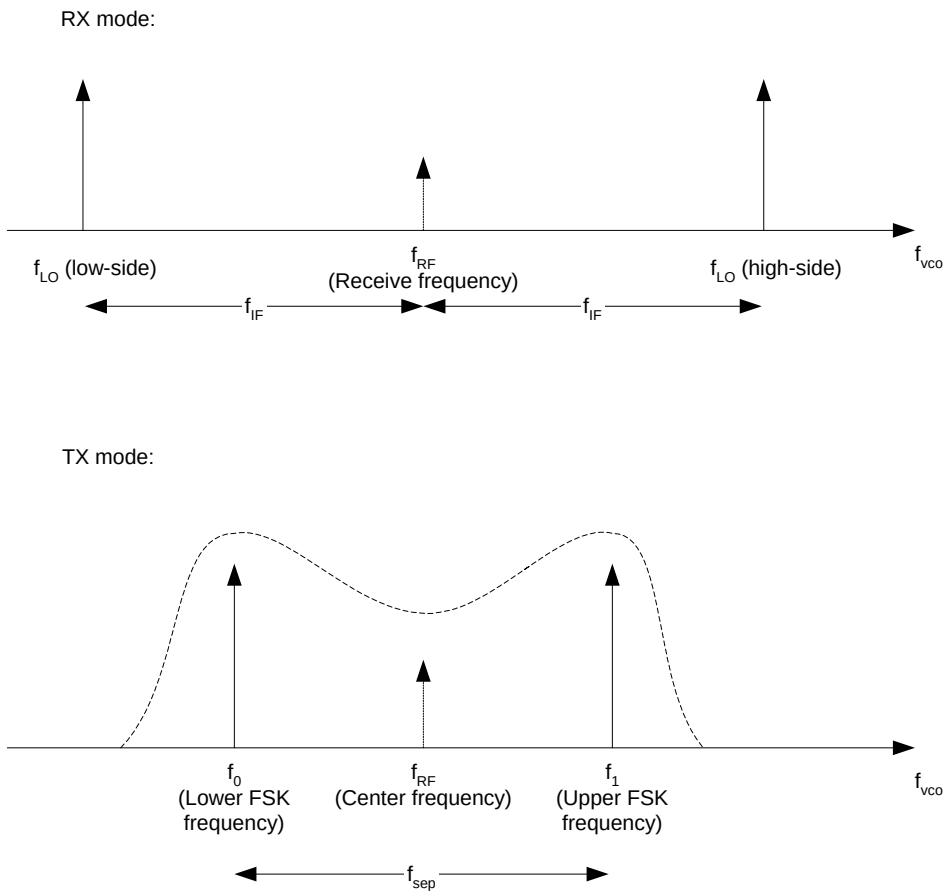

Figure 33, Relation between f_{vco}, f_{if}, and LO frequency

The frequency synthesiser (PLL) is controlled by the frequency word in the configuration registers. There are two frequency words, *A* and *B*, which can be programmed to two different frequencies. One of the frequency words can be used for RX (local oscillator frequency) and other for TX (transmitting frequency, f_0). This makes it possible to switch very fast between RX mode and TX mode. They can also be used for RX (or TX) on two different channels. Selection of frequency word *A* or *B* is performed by using the **RFMAIN.F_REG** control bit.

The frequency word, *FREQ*, is 24 bits (3 bytes) located in **FREQ_2A**:**FREQ_1A**:**FREQ_0A** and **FREQ_2B**:**FREQ_1B**:**FREQ_0B** for the *A* and *B* word, respectively.

The FSK frequency separation (two times the deviation), *FSEP*, is programmed in the **FSEP1**:**FSEP0** registers (11 bits).

The frequency word *FREQ* can be calculated from:

$$f_{VCO} = f_{ref} \cdot \frac{FREQ + FSEP \cdot TXDATA + 8192}{16384},$$

where *TXDATA* is 0 or 1 in transmit mode depending on the data bit to be transmitted. In receive mode *TXDATA* is always 0.

The reference frequency f_{ref} is the crystal oscillator clock divided by **PLL.REFDIV**, a

number between 2 and 24 that should be chosen such that:

$$1.00\ \text{MHz} \le f_{ref} \le 2.40\ \text{MHz}$$

Thus, the reference frequency f_{ref} is:

$$f_{ref} = \frac{f_{xosc}}{REFDIV}$$

f_{VCO} is the Local Oscillator (LO) frequency in receive mode, and the f_0 frequency in transmit mode (lower FSK frequency).

The LO frequency must be $f_{RF} - f_{IF}$ or $f_{RF} + f_{IF}$ giving low-side or high side LO injection respectively. Note that the data in **RFBUF** will be inverted if high-side LO is used. Please also note that f_{IF} depends on the RF frequency (150 and 130 kHz for 433 and 868 MHz respectively).

The upper FSK transmit frequency is given by:

$f_1 = f_0 + f_{sep}$,

where the frequency separation f_{sep} is set by the 11 bit separation word (**FSEP1**:**FSEP0**):

$$f_{sep} = f_{ref} \cdot \frac{FSEP}{16384}$$

Clearing **PLL.ALARM_DISABLE** will enable generation of the frequency alarm bits **PLL.ALARM_H** and **PLL.ALARM_L**. These bits indicate that the frequency synthesis PLL is unable to generate the frequency requested, and the PLL should be recalibrated as described in the VCO and PLL self-calibration section on page 113.

It is recommended that the **LOCK_CONTINOUS** bit in the **LOCK** register is checked when changing frequencies and when changing between RX and TX mode. If lock is not achieved, a calibration should be performed as described on page 113.

Chipcon recommends using the frequency settings described in the Recommended Settings for ISM Frequencies section on page 111. Chipcon recommends the use of the SmartRF® Studio software to calculate RF settings for the CC1010. Using the Print registers to file option in the File menu generates a text file with a C constant structure that can be passed to the RF configuration routines in the HAL library.

FREQ_2A (0xCC) – Frequency A, Control Register 2

Bit	Name	R/W	Reset value	Description
7:0	**FREQ_A (23:16)**	R/W	0x75	8 MSB of frequency control word A. It must be programmed such that *FREQ_2A* ≥ 01000000

FREQ_1A (0xCB) – Frequency A, Control Register 1

Bit	Name	R/W	Reset value	Description
7:0	**FREQ_A (15:8)**	R/W	0xA0	Bit 15 to 8 of frequency control word A.

FREQ_0A (0xCA) – Frequency A, Control Register 0

Bit	Name	R/W	Reset value	Description
7:0	**FREQ_A(7:0)**	R/W	0xCB	8 LSB of frequency control word A.

FREQ_2B (0xCF) - Frequency B, Control Register 2

Bit	Name	R/W	Reset value	Description
7:0	**FREQ_B (23:16)**	R/W	0x75	8 MSB of frequency control word B. It must be programmed such that *FREQ_2B* ≥ 01000000

FREQ_1B (0xCE) - Frequency B, Control Register 1

Bit	Name	R/W	Reset value	Description
7:0	**FREQ_B (15:8)**	R/W	0xA5	Bit 15 to 8 of frequency control word B.

FREQ_0B (0xCD) - Frequency B, Control Register 0

Bit	Name	R/W	Reset value	Description
7:0	**FREQ_B(7:0)**	R/W	0x4E	8 LSB of frequency control word B.

FSEP1 (0xEB) - Frequency Separation Control Register 1

Bit	Name	R/W	Reset value	Description
7:3	**-**	R0	0	Reserved, read as 0
2:0	**FSEP(10:8)**	R/W	0x00	3 MSB of the frequency separation control word **FSEP**

FSEP0 (0xEA) - Frequency Separation Control Register 0

Bit	Name	R/W	Reset value	Description
7:0	**FSEP(7:0)**	R/W	0x59	8 LSB of the frequency separation control word **FSEP**

PLL (0xE3) - PLL Control Register

Bit	Name	R/W	Reset value	Description
7:3	**REFDIV(4:0)**	R/W	0x02	Reference divider setting. The main crystal oscillator frequency is divided by **REFDIV** to create the RF reference frequency f_{ref}. Valid **REFDIV** settings are 2 through 24, as described above.
2	**ALARM_ DISABLE**	R/W	0	Disable / Enable the generation of the **ALARM_H** and **ALARM_L** bits 0 : Alarm function enabled 1 : Alarm function disabled
1	**ALARM_H**	R	None	Status bit for tuning voltage out of range (too close to VDD) The PLL should be re-calibrated if this bit is set
0	**ALARM_L**	R	None	Status bit for tuning voltage out of range (too close to GND) The PLL should be re-calibrated if this bit is set

17.13 Lock Indication

The frequency synthesis PLL has a lock indicator, which can be read from the **LOCK** register. **LOCK_INSTANT** is a single sample of the phase difference between the reference frequency and the divided VCO frequency. This bit gives a lock accuracy of > 25 %, depending on the division ratio set by the **FREQ** registers. To be used as a lock indicator, this bit must be sampled over a period of time to increase the accuracy.

Otherwise **LOCK_CONTINUOUS** should be used. It is a filtered version of **LOCK_INSTANT**, giving a lock accuracy of 99.3 % with **PLL_LOCK_ACCURACY** cleared.

If lock is not achieved, the PLL should be recalibrated as described on page 113.

LOCK (0xE4) - PLL Lock Register

Bit	Name	R/W	Reset value	Description
7:4	-	R0	0	Reserved, read as 0
3	**PLL_LOCK_ACCURACY**	R/W	0	0 : Sets Lock Threshold = 127, Reset Lock Threshold = 111 for continuous lock. Corresponds to a worst case accuracy of 99.3% 1 : Sets Lock Threshold = 31, Reset Lock Threshold =15 for continuous lock. Corresponds to a worst case accuracy of 97.2%
2	**PLL_LOCK_LENGTH**	R/W	0	0 : Normal PLL lock window 1 : Not used
1	**LOCK_INSTANT**	R	None	Status bit from Lock Detector. The result of one sample of the lock window on the PLL reference clock
0	**LOCK_CONTINUOUS**	R	None	Status bit from Lock Detector, set according to the **PLL_LOCK_ACCURACY** setting

17.14 Recommended Settings for ISM Frequencies

The recommended frequency synthesiser settings for a few operating frequencies in the popular ISM bands are shown in Table 35. These settings ensure optimum configuration of the synthesiser in receive mode for best sensitivity. For some settings of the synthesiser (combinations of RF frequencies and reference frequency), the receiver sensitivity is degraded. The performance of the transmitter is not affected by the settings, but recommended transmitter settings are included for completeness. The FSK frequency separation is set to 64 kHz. The SmartRF® Studio software can be used to generate the optimised configuration data as well. Also an application note (AN011) and a spreadsheet are available from Chipcon generating configuration data for any frequency giving optimum sensitivity.

ISM Frequency [MHz]	Actual frequency [MHz]	Crystal frequency [MHz]	Low-side / high-side LO*	Reference divider REFDIV [decimal]	Frequency word RX mode FREQ [decimal]	Frequency word RX mode FREQ [hex]
315	315.3372	3,6864	low-side	3	4194304	400000
		7.3728		6	4194304	400000
		11.0592		9	4194304	400000
		14.7456		12	4194304	400000
		18.4320		15	4194304	400000
		22.1184		18	4194304	400000
433.3	433.302000	3.6864	Low-side	3	5767168	580000
		7.3728		6	5767168	580000
		11.0592		9	5767168	580000
		14.7456		12	5767168	580000
		18.4320		15	5767168	580000
		22.1184		18	5767168	580000
433.9	433.916400	3.6864	Low-side	3	5775360	582000
		7.3728		6	5775360	582000
		11.0592		9	5775360	582000
		14.7456		12	5775360	582000
		18.4320		15	5775360	582000
		22.1184		18	5775360	582000
434.5	434.530800	3.6864	Low-side	3	5783552	584000
		7.3728		6	5783552	584000
		11.0592		9	5783552	584000
		14.7456		12	5783552	584000
		18.4320		15	5783552	584000
		22.1184		18	5783552	584000
868.3	868.277200	3.6864	Low-side	2	7708672	75A000
		7.3728		4	7708672	75A000
		11.0592		6	7708672	75A000
		14.7456		8	7708672	75A000
		18.4320		10	7708672	75A000
		22.1184		12	7708672	75A000
868.95	868.938800	3.6864	high-side	2	7716864	75C000
		7.3728		4	7716864	75C000
		11.0592		6	7716864	75C000
		14.7456		8	7716864	75C000
		18.4320		10	7716864	75C000
		22.1184		12	7716864	75C000

ISM Frequency [MHz]	Actual frequency [MHz]	Crystal frequency [MHz]	Low-side / high-side LO*	Reference divider REFDIV [decimal]	Frequency word RX mode FREQ [decimal]	Frequency word RX mode FREQ [hex]
869.525	869.506000	3.6864	Low-side	3	11583488	B0C000
		7.3728		6	11583488	B0C000
		11.0592		9	11583488	B0C000
		14.7456		12	11583488	B0C000
		18.4320		15	11583488	B0C000
		22.1184		18	11583488	B0C000
869.85	869.860400	3.6864	High-side	2	7725056	75E000
		7.3728		4	7725056	75E000
		11.0592		6	7725056	75E000
		14.7456		8	7725056	75E000
		18.4320		10	7725056	75E000
		22.1184		12	7725056	75E000
915	915.018800	3.6864	High-side	2	8126464	7C0000
		7.3728		4	8126464	7C0000
		11.0592		6	8126464	7C0000
		14.7456		8	8126464	7C0000
		18.4320		10	8126464	7C0000
		22.1184		12	8126464	7C0000

*Note: When using high-side LO injection the data received in **RFBUF** will be inverted.

Table 35. Recommended settings for ISM frequencies

17.15 VCO

Only one external inductor (L101) is required for the VCO. The inductor will determine the operating frequency range of the circuit. It is important to place the inductor as close to the pins as possible in order to reduce stray inductance. It is recommended to use a high Q, low tolerance inductor for best performance. Typical tuning range for the integrated varactor is 20-25%.

Component values for various frequencies are given in Table 28. Component values for other frequencies can be found using the SmartRF® Studio software.

17.16 VCO and PLL self-calibration

To compensate for supply voltage, temperature and process variations the VCO and PLL must be calibrated. The calibration is done automatically and sets optimum VCO tuning range and optimum charge pump current for PLL stability. The calibration is controlled by using the **CAL** register.

After setting up the device at the operating frequency, the **TEST6** register must be programmed (depend on operation mode). Then the self-calibration is initiated by setting the **CAL.CAL_START** bit. The calibration result is stored internally in the chip, and is valid as long as power is not turned off. If large supply voltage variations (more than 0.5 V) or temperature variations (more than 40 degrees) occur after calibration, a new calibration should be performed. For more details on the calibration data, see the description for test and calibration registers page 128.

When **CAL.CAL_WAIT** = 1 the calibration is complete and the **CAL.CAL_COMPLETE** flag is set after 25650 reference clock cycles (f_{REF}, see the Frequency programming section at page 106). The user can poll this bit, or simply wait 25650 reference clock cycles. The lowest permitted reference frequency (1 MHz) gives a wait time of 25.65 ms, which is the worst case. Some calibration times for different reference frequencies are listed in Table 36. When **CAL.CAL_WAIT** = 0 it takes 12825 cycles, but this is not recommended.

Reference frequency [MHz]	Calibration time [ms]
2.4	10.69
2.0	12.83
1.5	17.10
1.0	25.65

Table 36. Calibration times

The **CAL_START** bit must be cleared after the calibration is done. This will also clear the **CAL.CAL_COMPLETE** status bit.

There are separate calibration values for the two frequency registers. If the two frequencies, A and B, differ more than 1 MHz, or different VCO currents are used (**CURRENT.VCO_CURRENT(3:0)**), the calibration should be done separately. When using a 10.7 MHz external IF the LO is 10.7 MHz below/above the transmit frequency, hence separate calibration must be done. The **CAL.CAL_DUAL** bit controls dual or separate calibration.

The single frequency calibration algorithm using separate calibration for RX and TX frequency is illustrated in Figure 34.

In Figure 35 the dual calibration algorithm is shown for two RX frequencies. It could also be used for two TX frequencies, or even for one RX and one TX frequency if the same VCO current is used.

In multi-channel and frequency hopping applications the PLL calibration values may be read and stored for later use. By reading back calibration values and frequency change can be done without doing a re-calibration which could take up to 25 ms. After a calibration is completed,

the result of the calibration is stored in the **TEST0** (VCO capacitance array setting) and **TEST2** (Charge pump current setting) registers. The access of these registers depend on the **RFMAIN.F_REG** bit as there are two physical registers mapped to the same address, one for frequency A and one for frequency B. The calibration result can be read back from **TEST0** and **TEST2**, and later written back in **TEST5.VCO_AO(3:0)** and **TEST5.CHP_CO(4:0)** respectively. **TEST5.VCO_OVERRIDE** and **TEST6.CHP_OVERRIDE** must be set in order to make the override values to take effect.

The rest of the **TESTn** registers are not needed for normal operation of ***CC1010***, but are included here for completeness.

CAL (0xE5) - PLL Calibration Control Register

Bit	Name	R/W	Reset value	Description
7	**CAL_START**	R/W	0	↑ 1 : Calibration started 0 : Calibration inactive Calibration is started after a positive transition on **CAL_START**. **CAL_START** must manually be written to 0 after calibration is complete (read the **CAL_COMPLETE** flag)
6	**CAL_DUAL**	R/W	0	1 : Store calibration in both A and B (dual calibration) 0 : Store calibration in A or B defined by **RFMAIN.F_REG**
5	**CAL_WAIT**	R/W	0	1 : Normal Calibration Wait Time (Recommended) 0 : Half Calibration Wait Time The calibration time is proportional to the internal reference frequency f_{REF}. See the main text.
4	**CAL_CURRENT**	R/W	0	1 : Calibration Current Doubled 0 : Normal Calibration Current (Recommended)
3	**CAL_COMPLETE**	R	0	Status bit which is set when the calibration is complete
2:0	**CAL_ITERATE**	R/W	101	Iteration start value for calibration DAC 000 - 101: Not used 110 : Normal start value 111 : Not used

TEST6 (0xFF) – PLL Test Register 6

Bit	Name	R/W	Reset value	Description
7	**LOOPFILTER_TP1**	R/W	0	Testpoint 1 select 0 : CHP_OUT tied to GND 1 : Select testpoint 1 to CHP_OUT
6	**LOOPFILTER_TP2**	R/W	0	Testpoint 2 select 0 : CHP_OUT tied to GND 1 : Select testpoint 2 to CHP_OUT
5	**CHP_OVERRIDE**	R/W	0	Charge pump current override enable 0 : use calibrated value. Used in RX mode 1 : use CHP_CO[4:0] value. Used in TX mode
4:0	**CHP_CO(4:0)**	R/W	0x10	Charge pump current DAC override value, applied when **CHP_OVERRIDE** is high. Use 0x1B in TX mode.

TEST5 (0xFE) – PLL Test Register 5

Bit	Name	R/W	Reset value	Description
7:6	**-**	R0	0x00	Reserved, read as 0
5	**CHP_DISABLE**	R/W	0	PLL Charge Pump disable 0 : Charge Pump is enabled (normal function) 1 : Charge Pump is disabled
4	**VCO_OVERRIDE**	R/W	0	VCO array override 0 : VCO array is not overridden (normal function) 1 : VCO array is set by **VCO_AO(3:0)**
3:0	**VCO_AO(3:0)**	R/W	0x08	VCO Array override value

TEST4 (0xFD) – PLL Test Register 4

Bit	Name	R/W	Reset value	Description
7:6	**-**	R/W	0x00	Reserved, read as 0
5:0	**L2KIO**	R/W	0x25	Constant charge pump current scaling / rounding factor. Sets bandwidth of PLL. Default value is 0x25 and shall be used for all modes

TEST3 (0xFC) – PLL Test Register 3

Bit	Name	R/W	Reset value	Description
7:5	**-**	R0	0x00	Reserved, read as 0
4	**BREAK_LOOP**	R/W	0	Break frequency synthesis PLL 0 : PLL loop closed (normal operation) 1 : PLL loop open
3:0	**CAL_DAC_OPEN (3:0)**	R/W	100	Calibration DAC override value, active when **BREAK_LOOP** is set

TEST2 (0xFB) – PLL Test Register 2

Bit	Name	R/W	Reset value	Description
7:5	**-**	R0	0x00	Reserved, read as 0
4:0	**CHP_CURRENT (4:0)**	R	None	Status vector defining the applied charge pump current

TEST1 (0xFA) – PLL Test Register 1

Bit	Name	R/W	Reset value	Description
7:4	**-**	R0	0x00	Reserved, read as 0
3:0	**CAL_DAC(3:0)**	R	None	Status vector defining the applied calibration DAC value

TEST0 (0xF9) – PLL Test Register 0

Bit	Name	R/W	Reset value	Description
7:4	**-**	R0	0x00	Reserved, read as 0
3:0	**VCO_ARRAY(3:0)**	R	0x00	Status vector defining the applied VCO array

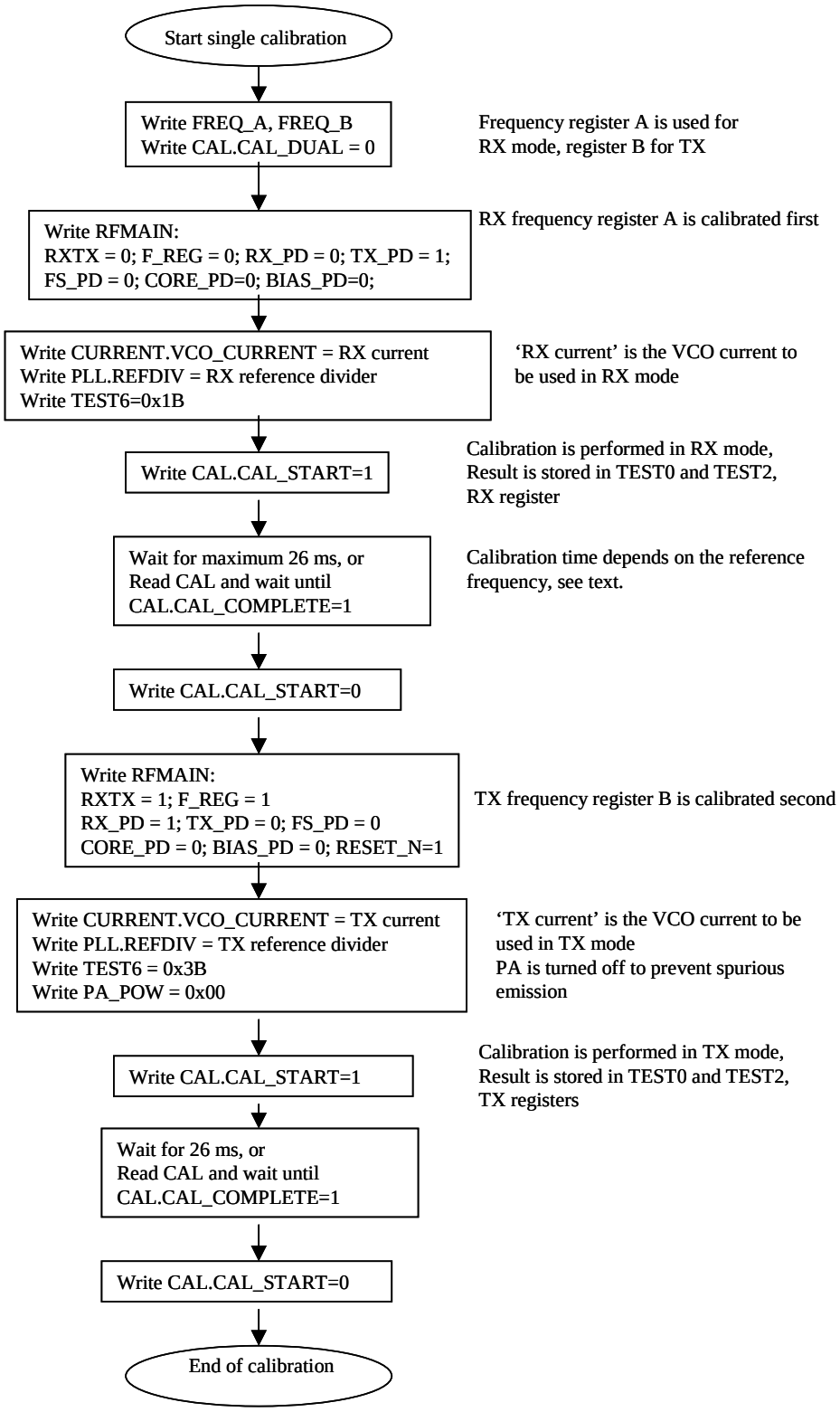

Figure 34. Single calibration algorithm for RX and TX

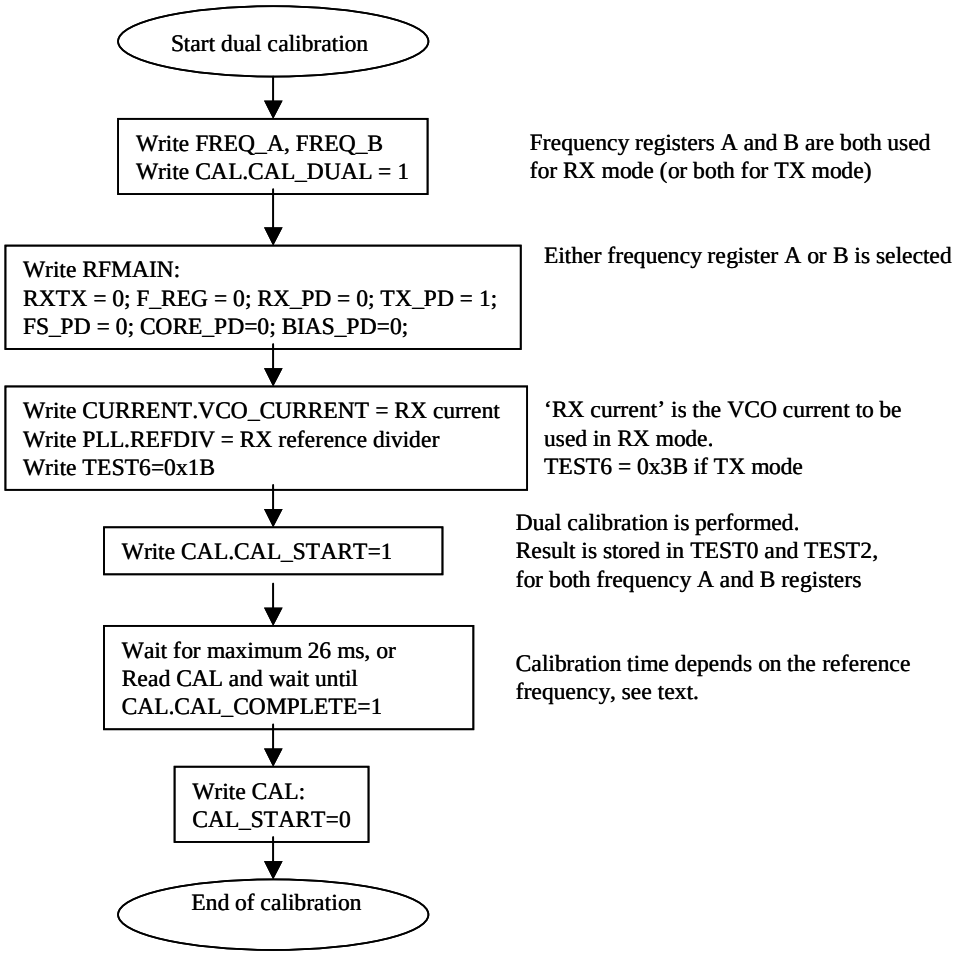

Figure 35. Dual calibration algorithm for RX mode

17.17 VCO, LNA and buffer current control

The VCO current is programmable and should be set according to operating frequency, RX/TX mode and output power. The receiver sensitivity will also be affected by the current settings. Recommended settings for the **CURRENT.VCO_CURRENT** bits are shown in the **CURRENT** register table following below.

The bias current for the LNA, and the LO and PA buffers are also programmable through **FREND.LNA_CURRENT**, **FREND.BUF_CURRENT**, **CURRENT.LO_DRIVE** and **CURRENT.PA_DRIVE**.

CURRENT (0xE1) - RF Current Control Register

Bit	Name	R/W	Reset value	Description
7:4	**VCO_CURRENT (3:0)**	R/W	1100	Control of current in VCO core for TX and RX 0000 : 150µA 0001 : 250µA 0010 : 350µA 0011 : 450µA 0100 : 950µA, use for RX, f< 500 MHz 0101 : 1050µA 0110 : 1150µA, use for RX f>500 MHz 0111 : 1250µA 1000 : 1450µA, use for TX f < 500 MHz 1001 : 1550µA 1010 : 1650µA 1011 : 1750µA 1100 : 2250µA 1101 : 2350µA 1110 : 2450µA 1111 : 2550µA, use for TX, f>500 MHz
3:2	**LO_DRIVE (1:0)**	R/W	10	Control of current in VCO buffer for LO drive 00 : 0.5mA, use for TX 01 : 1.0mA, use for RX when f<500 MHz 10 : 1.5mA 11 : 2.0mA, use for RX, f>500 MHz
1:0	**PA_DRIVE (1:0)**	R/W	10	Control of current in VCO buffer for PA 00 : 1mA, use for RX 01 : 2mA, use for TX, f<500 MHz 10 : 3mA 11 : 4mA, use for TX, f>500 MHz

FREND (0xEE) - Front End Control Register

Bit	Name	R/W	Reset value	Description
7:6	**-**	R/W	0	Reserved, should always be written 0
5	**BUF_CURRENT**	R/W	0	Control of current in the LNA_FOLLOWER 0 : 520uA, use for f<500 MHz 1 : 690uA, use for f>500 MHz
4:3	**LNA_CURRENT(1:0)**	R/W	00	Control of current in LNA 00 : 0.8mA 01 : 1.4mA, use for f<500 MHz 10 : 1.8mA, use for f>500 MHz 11 : 2.2mA
2	**IF_EXTERNAL**	R/W	0	Controls where the output from the mixer goes: 0: To internal IF filter and demodulator 1: To the **AD2(RSSI/IF)** pin for external filtering and demodulation
1	**RSSI**	R/W	0	0: RSSI output disconnected from **AD2(RSSI/IF)** pin 1: RSSI output connected to **AD2(RSSI/IF)** pin
0	**-**	R/W	0	Reserved, should always be written 0

17.18 Input / Output Matching

A few passive external components combined with the internal T/R switch circuitry ensures match in both RX and TX mode. The matching network is shown in Figure 36. Component values for various frequencies are given in Table 28. Component values for other frequencies can be found using the SmartRF® Studio software.

The register **MATCH** should initially be set as shown in the register description below. The **MATCH** register controls a capacitor array located at the RF_OUT pin. The register can be used to fine-tune the impedance match for a particular layout and component selection. The tuning can be accomplished by stepping the register values until optimum sensitivity and output power is reached.

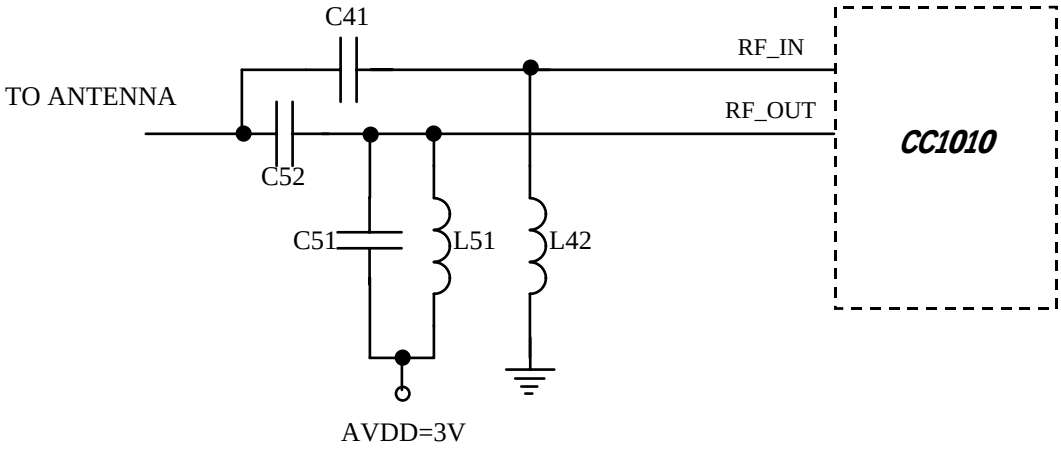

Figure 36. Input/output matching network

MATCH (0xDC) - Match Capacitor Array Control Register

Bit	Name	R/W	Reset value	Description
7:3	**RX_MATCH (3:0)**	R/W	0000	Selects matching capacitor array value for RX, step size is 0.4 pF 0000: Use for RF frequency > 500 MHz 1100: Use for RF frequency < 500 MHz
3:0	**TX_MATCH (3:0)**	R/W	0000	Selects matching capacitor array value for TX, step size is 0.4 pF. Recommended setting is 0000

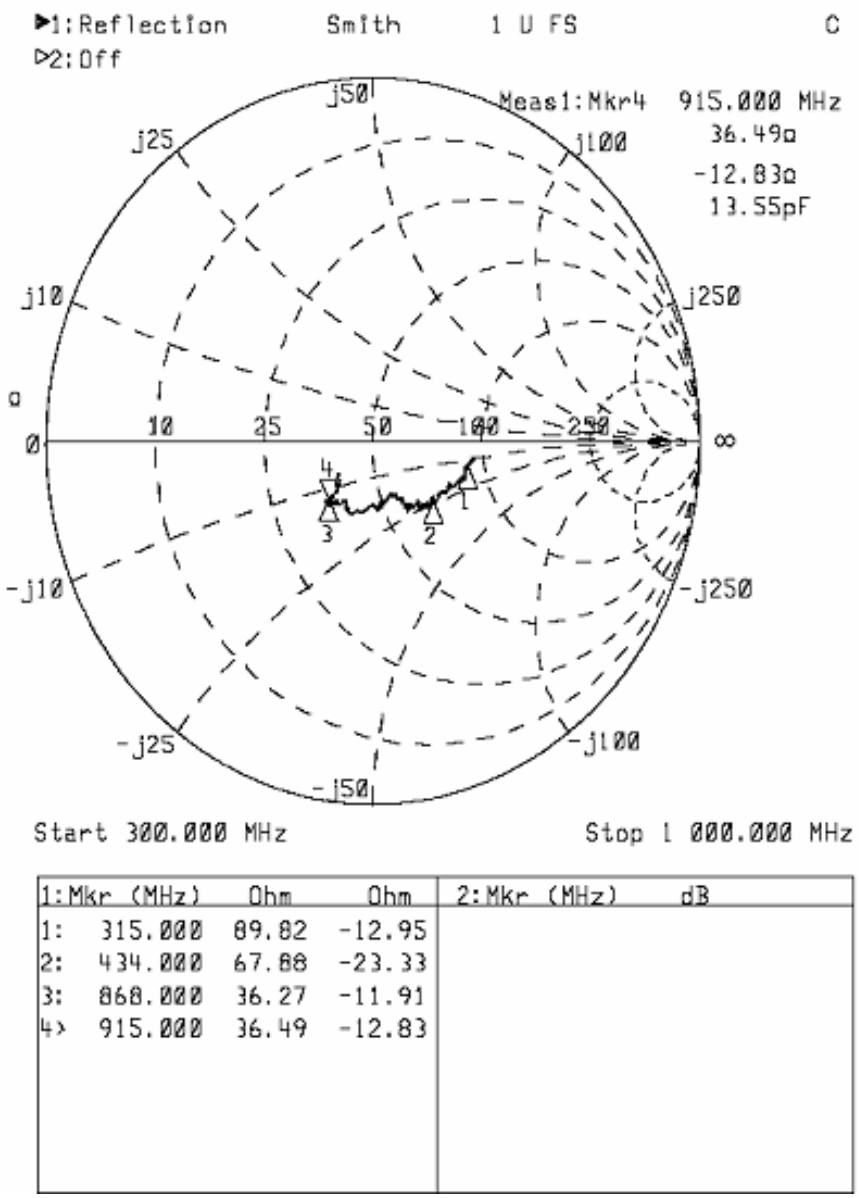

Figure 37. Typical LNA input impedance, 300 – 1000 MHz

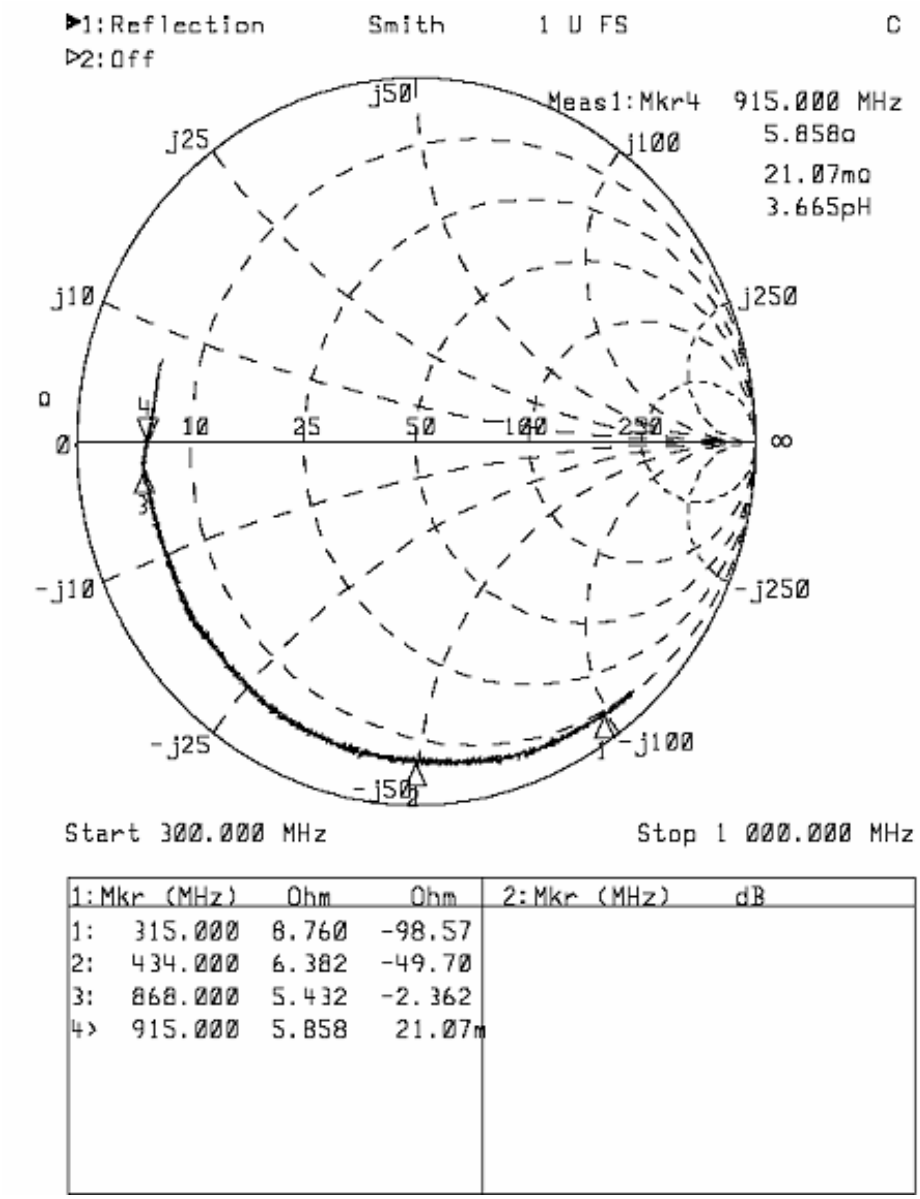

Figure 38. Typical inactive PA pin impedance, 300 – 1000 MHz

17.19 Output Power Programming

The RF output power is programmable and controlled by the **PA_POW** register. Table 37 shows the closest programmable value for output powers in steps of 1 dB. The typical current consumption is also shown for a 14.7456 MHz main oscillator frequency. The current consumption is for the entire *CC1010*, with both the RF transceiver and MCU active.

In power down mode the **PA_POW** should be set to 0x00 for minimum leakage current.

Output power [dBm]	RF frequency 433 MHz		RF frequency 868 MHz	
	PA_POW	Current consumption, typ. [mA]	PA_POW	Current consumption, typ. [mA]
-20	0x02	21.7	0x02	24.2
-19	0x02	21.7	0x02	24.2
-18	0x02	21.7	0x03	24.4
-17	0x02	21.7	0x03	24.4
-16	0x02	21.7	0x04	24.6
-15	0x02	21.7	0x04	24.6
-14	0x03	21.9	0x05	24.8
-13	0x03	21.9	0x06	25
-12	0x04	22.2	0x07	25.2
-11	0x04	22.2	0x08	25.4
-10	0x05	22.4	0x09	25.7
-9	0x05	22.4	0x0A	25.9
-8	0x06	22.7	0x0B	26
-7	0x07	22.9	0x0C	26.2
-6	0x08	23.2	0x0E	26.6
-5	0x09	23.5	0x0F	26.8
-4	0x0A	23.8	0x50	29.3
-3	0x0B	24.0	0x60	29.9
-2	0x0D	24.5	0x70	30.5
-1	0x0E	24.9	0x80	31.0
0	0x40	26.0	0xA0	32.1
1	0x50	27.0	0xC0	33.1
2	0x60	28.0	0xE0	34.2
3	0x60	28.0	0xF0	34.7
4	0x70	28.9	0xFF	38.5
5	0x80	30.0		
6	0x90	31.0		
7	0xB0	33.2		
8	0xC0	34.3		
9	0xE0	36.7		
10	0xFF	42.8		

Note: The current consumption is measured at for a 14.7456 MHz main oscillator frequency, and is for the entire *CC1010* (both MCU and RF transceiver). If the crystal frequency is changed, the current consumption for the MCU will change, the relationship between crystal frequency and MCU current consumption is shown in Figure 1.

Table 37. Output power settings and typical current consumption

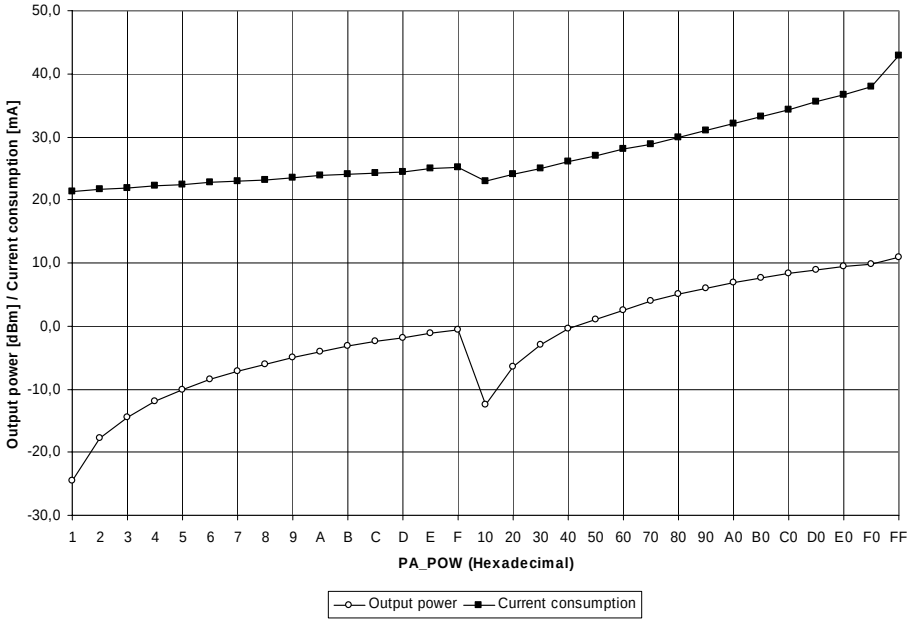

Figure 39. Typical output power and total current consumption, 433 MHz

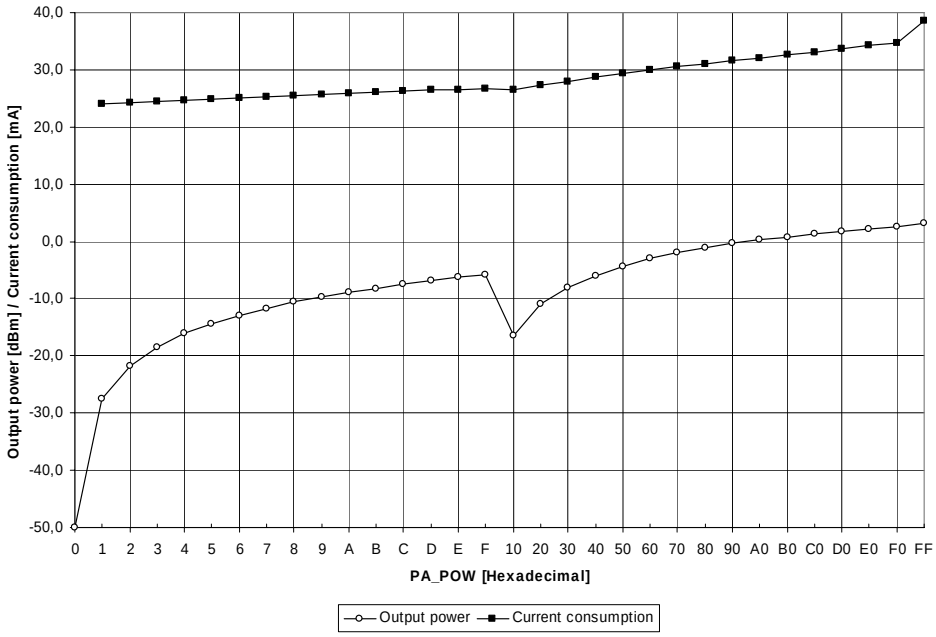

Figure 40. Typical output power and total current consumption, 868 MHz

PA_POW (0xE2) - PA Output Power Control Register

Bit	Name	R/W	Reset value	Description
7:4	**PA_HIGHPOWER (3:0)**	R/W	0x00	Control of output power in high power array. Should be 0000 in PD mode. See Table 37 for details.
3:0	**PA_LOWPOWER (3:0)**	R/W	0x0F	Control of output power in low power array. Should be 0000 in PD mode. See Table 37 for details.

17.20 RSSI Output

CC1010 has a built-in RSSI (Received Signal Strength Indicator) giving an analog output signal at the **AD2(RSSI/IF)** pin. RSSI is enabled when setting **FREND.RSSI** (see page 119). The output current of this pin is then inversely proportional to the input signal level. The output should be terminated in a resistor to convert the current output into a voltage. A capacitor is used to low-pass filter the signal.

The RSSI voltage range is from 0 – 1.2 V when using a 27 kΩ terminating resistor, giving approximately 50 dB/V. This RSSI voltage can be measured by the on-chip A/D converter using the **AD2** input. Note that a higher voltage means a lower input signal.

The RSSI measures the power referred to the RF_IN pin. The input power can be calculated using the following equations:

$$P = -48.8\ V_{RSSI} - 57.2\ [\text{dBm}] \text{ at 433 MHz}$$

$$P = -46.9\ V_{RSSI} - 53.9\ [\text{dBm}] \text{ at 868 MHz}$$

The external network for RSSI operation is shown in

Figure 41. R281 = 27 kΩ, C281 = 1nF.

A typical plot of RSSI voltage as function of input power is shown in Figure 42.

When using the on-chip A/D converter, set **ADCON** = 0x06 to initiate a single conversion using VDD as reference. The converted RSSI voltage can then be read from the **ADDATH** and **ADDATL** registers.

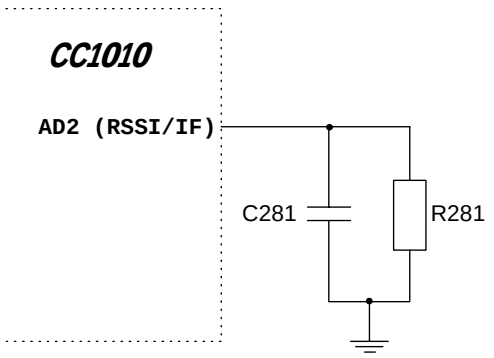

Figure 41. RSSI circuit

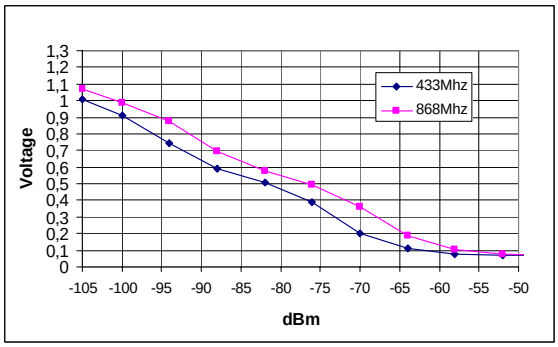

Figure 42. Typical RSSI voltage vs. input power

17.21 IF output

CC1010 has a built-in 10.7 MHz IF output buffer. This buffer can be used in applications requiring image frequency rejection. The system is then built with ***CC1010***, a 10.7 MHz ceramic filter, SAW front-end filter and an external 10.7 MHz demodulator. The matching network for an external IF filter is shown in Figure 43. R281 = 470 Ω, C281 = 3.3nF. This external network provides a 330 Ω source impedance for the 10.7 MHz ceramic filter.

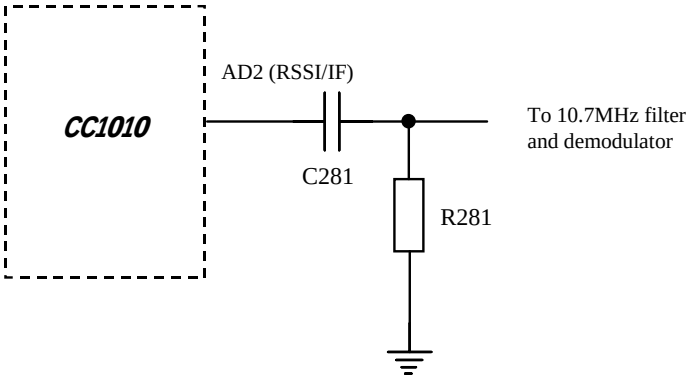

Figure 43. IF Output

17.22 Optional LC Filter

An optional low-pass LC filter may be added between the antenna and the matching network in certain applications. The filter will reduce the emission of harmonics and increase the receiver selectivity.

The filter topology is shown in Figure 44. Component values are given in Table 38. The filter is designed for 50 Ω terminations. The component values may have to be tuned to compensate for layout parasitics.

The design equations for a 3dB equal ripple filter are:

$$\omega_C \approx 2\pi \cdot f_{RF} \cdot \left(\frac{1}{1 - 0.1333} \right)$$

$$L = \frac{35.6}{\omega_C},\ C = \frac{0.067}{\omega_C}$$

where ω_c is the cut-off frequency and f_{RF} is the transmitted RF frequency.

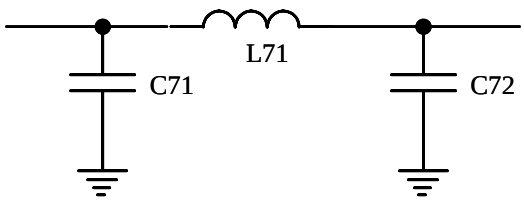

Figure 44. LC Filter

Item	315 MHz	434 MHz	869 MHz	915 MHz
C71	30 pF	20 pF	10 pF	10 pF
C72	30 pF	20 pF	10 pF	10 pF
L71	15 nH	12 nH	5.6 nH	4.7 nH

Table 38. LC Filter component values

18. Reserved registers and test registers

The *CC1010* contains a few registers intended for test purposes only. Normally these registers should not be written to.

The **FSHAPEn**, **FSDELAY** and **FSCTRL** registers are reserved for future use. A separate reset signal for the PLL is available in **FSCTRL.FS_RESET_N**. This will reset the frequency divider part of the PLL. The reset is active when a zero is written, and a one must be written for the reset to be released. **FSCTRL.EXT_FILTER** can be set in order to use an external PLL loop filter. However, this is not recommended in a normal application.

The **PRESCALER** register controls the prescaler current, and should always be set to 0x00 (which is the reset state).

The **TESTMUX** register is not needed for normal operation of *CC1010*, but is included here for completeness. **TESTMUX** should always be set to 0x00.

TESTMUX	P0.2	P0.1	P0.0
0000	Normal operation	Normal operation	Normal operation
0001	CLK_REF	CLK_PHASE_DET_OUT	MODEM_TX_OUT
0010	LOCK_DET_CONTINUOUS	LOCK_DET_INSTANT	ANALOG_WINDOW_SYNC
0011	SER_PAR_IRQ	TIMER2_IRQ	TIMER3_IRQ
0100	RTC_IRQ	ADC_IRQ	DES_IRQ
0101	ANALOG_ALARM_H	ANALOG_ALARM_L	CAL_DIG_COMPLETE
0110	MODEM_BIT_CLK	MODEM_RX_DATA	ANALOG_IF_OUT
0111	MODEM_BIT_CLK	MODEM_TX_DATA	MODEM_TX_OUT
1000	ADC_SAR_ADCCLK_EN	ANALOG_COMP	ADC_SAR_EOC
1001	CLK_RTC	RTC_IRQ	CLK_UC
1010	DES_DEBUG_0		
1011	DES_DEBUG_1		
1100	DES_DEBUG_2		
1101	DES_DEBUG_3		
1110	FLASH_WRITE_IRQ		
1111	CAL_DIG_COMPLETE		

Table 39. TESTMUX modes

FSHAPEn (0xF1 - 0xF7), n∈1..7 - Frequency Shaping Register n

Bit	Name	R/W	Reset value	Description
7:5	-	R0	0x00	Reserved, read as 0
4:0	**FSHAPEn (4:0)**	R/W	0xXX	Reserved for future use.

FSDELAY (0xE9) - Frequency Shaping Delay Control Register

Bit	Name	R/W	Reset value	Description
7:0	**FSDELAY (7:0)**	R/W	0x2F	Reserved for future use.

FSCTRL (0xEC) - Frequency Synthesiser Control Register

Bit	Name	R/W	Reset value	Description
7:5	**-**	R0	0x00	Reserved, read as 0
4	**EXT_FILTER**	R/W	0	Setting for external loop filter (not recommended) 0 : Internal loop filter (recommended) 1 : External loop filter
3	**DITHER1**	R/W	0	Reserved for future use. Write as 0.
2	**DITHER0**	R/W	0	Reserved for future use. Write as 0.
1	**SHAPE**	R/W	0	Reserved for future use. Write as 0.
0	**FS_RESET_N**	R/W	1	Separate reset of frequency synthesiser 0 : Frequency synthesiser is reset 1 : Frequency synthesiser reset is released

PRESCALER (0xE6) - Prescaler Control Register

Bit	Name	R/W	Reset value	Description
7	**PRE_SWING (1:0)**	R/W	00	Prescaler swing. Fractions for PRE_CURRENT[1:0] = 00 00 : 1 * Nominal Swing 01 : 2/3 * Nominal Swing 10 : 7/3 * Nominal Swing 11 : 5/3 * Nominal Swing
5	**PRE_CURRENT (1:0)**	R/W	00	Prescaler current scaling 00 : 1 * Nominal Current 01 : 2/3 * Nominal Current 10 : 1/2 * Nominal Current 11 : 2/5 * Nominal Current
3	**IF_INPUT**	R/W	0	0 : Nominal setting 1 : **AD2(RSSI/IF)** pin is input to IF-strips
2	**IF_FRONT**	R/W	0	0 : Nominal setting 1 : Output of IF_Front_amp is switched to the **AD2(RSSI/IF)** pin
1	**-**	R/W	0	Reserved for future use, always write 0
0	**-**	R/W	0	Reserved for future use, always write 0

TESTMUX (0xEF) - Test Multiplexer Control Register (for prototype testing)

Bit	Name	R/W	Reset value	Description
7:4	**-**	R0	0x00	Reserved, read as 0
3:0	**TESTMUX (3:0)**	R/W	0x00	Select internal test signals to be output to **P0(2:0)**. This function is enabled when **TESTMUX** ≠ 0000. The port directions are still set by **P0DIR**.

19. System Considerations and Guidelines

19.1 SRD regulations

International regulations and national laws regulate the use of radio receivers and transmitters. SRDs (Short Range Devices) for licence free operation are allowed to operate in the 433 and 868-870 MHz bands in most European countries. In the United States such devices operate in the 260–470 and 902-928 MHz bands. ***CC1010*** is designed to meet the requirements for operation in all these bands. A summary of the most important aspects of these regulations can be found in Application Note *AN001 SRD regulations for licence free transceiver operation*, available on Chipcon's web site.

19.2 Low cost systems

In systems where low cost is of great importance the ***CC1010*** is the ideal choice. Very few external components keep the total cost at a minimum. The oscillator crystal can then be a low cost crystal with 50/25 ppm frequency tolerance at 433/868 MHz respectively.

19.3 Battery operated systems

In low power applications the RF Transceiver power down mode should be used when no communication takes place. Using receiver polling, that is, listening for transmissions for a few milliseconds at regular intervals, will also save a lot of battery power. The RSSI can be used as a first indication that a transmission is received. See page 89 for information on how effective power management can be implemented. Utilizing the Idle mode and Power down modes and clock modes of the MCU will also reduce the power consumption significantly. See page 33 for details. Also of interest is Application Note *AN017 Low Power Systems Using the CC1010*, available on Chipcon's web site.

19.4 Narrow-band systems

CC400, ***CC900*** and ***CC1020*** are recommended for best performance in narrow-band applications. The phase noise of these chips is superior, and for systems with 25 kHz channel spacing or less with strict requirements to ACP (Adjacent Channel Power), low phase noise is important.

The selectivity of ***CC1010*** can be improved by using an external ceramic filter and demodulator at 10.7 MHz. Such ceramic filters are typically 180 or 280 kHz wide.

A unique feature in ***CC1010*** is the very fine frequency resolution of < 250 Hz. This can be used to do the temperature compensation of the crystal if the temperature drift curve is known and a temperature sensor is included in the system. Even initial adjustment can be done using the frequency programmability. This eliminates the need for an expensive TCXO and trimming in some applications. In less demanding applications a crystal with low temperature drift and low ageing could be used without further compensation. A trimmer capacitor in the crystal oscillator circuit (in parallel with C171) could be used to set the initial frequency accurately. The fine frequency step programming cannot be used in RX mode if optimised frequency settings are required (see page 111).

19.5 High reliability systems

Using a SAW filter as a preselector between the antenna and the RF input will improve the communication reliability in harsh environments by reducing the probability of blocking. The receiver sensitivity and the output power will be reduced due to the filter insertion loss. By inserting the filter in the RX path only, together with an external RX/TX switch, only the receiver sensitivity is reduced, and output power is unaffected. Any general-purpose I/O pins can be

configured to control an external LNA, RX/TX switch or power amplifier.

19.6 Frequency hopping spread spectrum systems

Due to the very fast frequency shift properties of the PLL, the ***CC1010*** is very suitable for frequency hopping systems. Hop rates of 10-1000 hops/s are usually used depending on the bit rate and the amount of data to be sent during each transmission. The two frequency registers (**FREQ_A** and **FREQ_B**) are designed such that the 'next' frequency can be programmed while the 'present' frequency is used. The switching between the two frequencies is done through the **RFMAIN.F_REG** control bit. Frequency hopping improves the reliability and increases the security of a wireless link. The US ISM band at 902 – 928 MHz is very suitable for frequency hopping protocols. The FCC regulations allow the use of transmitted output powers up to 1W if frequency hopping is used and certain requirements are met. Please see application note *AN001 SRD regulations for licence free transceiver operation* for more information about this and other radio regulations issues.

19.7 Software

Chipcon provides world-class software support for the ***CC1010***.

The HAL (Hardware Abstraction Library) library provides easy-to-use functions and macros to access the ***CC1010*** hardware without having to access SFRs directly. It also provides functions simple RF communications routines.

The CUL (Chipcon Utility Library) library contains more sophisticated RF communication routines with support for CRC checking, automatic acknowledgment and retransmission.

Both libraries are supplied with full source code, and are documented in the ***CC1010*** IDE User Manual.

Chipcon also supplies a wide range of examples for the ***CC1010***. These examples include simple examples, which show off the various features of the ***CC1010***, as well as examples showing RF communication and more sophisticated application-related examples. Source code as well as pre-compiled HEX files are available for all examples. A ZIP file including all examples and documentation is available from the Chipcon web pages. Make sure to check the web pages regularly, as improvements to existing examples as well as all-new examples are added as they are available.

19.8 Development tools

Chipcon supplies a full-featured development kit for the ***CC1010*** that includes everything you need to start and finish your design. The development kit is documented in the CC1010DK User Manual.

The development kit includes an evaluation version of the Keil C compiler; this is limited to a code size of 2 kBytes. If the user wishes to compile larger programs, a full version of the compiler must be purchased from Keil. The Keil development environment supports in-circuit debugging using the second serial port.

The ***CC1010*** is supported by several compiler vendors. More information about compiler support can be found on Chipcon's web pages.

19.9 PA "splattering"

In systems where the PA is turned on and off rapidly, for example in a system that switches rapidly between RX and TX, so-called "splattering" may occur. This will result in a very wide RF spectrum that may intrude into neighbouring channels or extend out of band. To minimise this effect, Chipcon recommends that the **PA_POW** register be used to turn the PA gradually on and off. The optimal pattern is to follow the sequence 0x00, 0x01, 0x1E, 0x8F, 0xEF when going from RX to TX and consequently using 0xEF, 0x8F, 0x1E, 0x01, 0x00 when going from TX to RX. **PA_POW** should be left set to 0x00 in RX mode and 0xEF in TX mode.

TEXAS INSTRUMENTS

19.10 PCB Layout Recommendations

Chipcon provide reference layouts that should be followed in order to achieve the best performance. The reference designs can be downloaded on the Chipcon website.

A four layer PCB is highly recommended. The top layer should be used for signal routing, and the open areas should be filled with metallisation connected to ground using many vias. The second layer of the PCB should be the "ground-plane". Layer three is used for power supply and layer four for general routing and decoupling. A few components are also placed at the reverse side (VCO inductor and power filtering).

The ground pins should be connected to ground as close as possible to the package pin using individual vias for each pin. The de-coupling capacitors should also be placed as close as possible to the supply pins and connected to the ground plane by separate vias. For 868 and 915 MHz operation, some of the AVDD supply pins should be fitted with ferrite beads in series to prevent noise from coupling from one supply pin to another. Please see the reference layouts for more information. For 433 and 315 MHz operation these beads are not required, and can be replaced with 0-ohm resistors or PCB traces.

The external components should be as small as possible and surface mount devices are required. The VCO inductor must be placed as close as possible to the chip and symmetrical with respect to the input pins. It is important to keep the coupling between the VCO inductor and the matching network low in order to reduce LO leakage. Due to this the VCO inductor is placed at the reverse side of the PCB.

A development kit with a fully assembled PCB is available, and can be used as a guideline for layout.

Full documentation and Gerber PCB layout files are available on Chipcon's web site.

19.11 Antenna Considerations

CC1010 can be used together with various types of antennas. The most common antennas for short-range devices are monopole, helical and loop antennas.

Monopole antennas are resonant antennas with a length corresponding to one quarter of the electrical wavelength ($\lambda/4$). They are very easy to design and can be implemented simply as a "piece of wire" or even integrated into the PCB.

Non-resonant monopole antennas shorter than $\lambda/4$ can also be used, but at the expense of range. In size and cost critical applications such an antenna may very well be integrated into the PCB.

Helical antennas can be thought of as a combination of a monopole and a loop antenna. They are a good compromise in size critical applications. But helical antennas tend to be more difficult to optimise than the simple monopole.

Loop antennas are easy to integrate into the PCB, but are less effective due to difficult impedance matching because of their very low radiation resistance if they are made small.

For low power applications the $\lambda/4$-monopole antenna is recommended giving the best range and because of its simplicity.

The length of the $\lambda/4$-monopole antenna is given by:

$$L = 7125 / f$$

where f is in MHz, giving the length in cm. An antenna for 869 MHz should be 8.2 cm, and 16.4 cm for 434 MHz.

The antenna should be connected as close as possible to the IC. If the antenna is located away from the input pin the antenna should be matched to the feeding transmission line (50 Ω).

For a more thorough primer on antennas, please refer to Application Note *AN003 SRD Antennas* available on Chipcon's web site.

20. Package Description (TQFP-64)

CC1010 is packaged in a TQFP-64 package. The package is shown in Figure 45. Please note that the drawing in Figure 45 is not to scale.

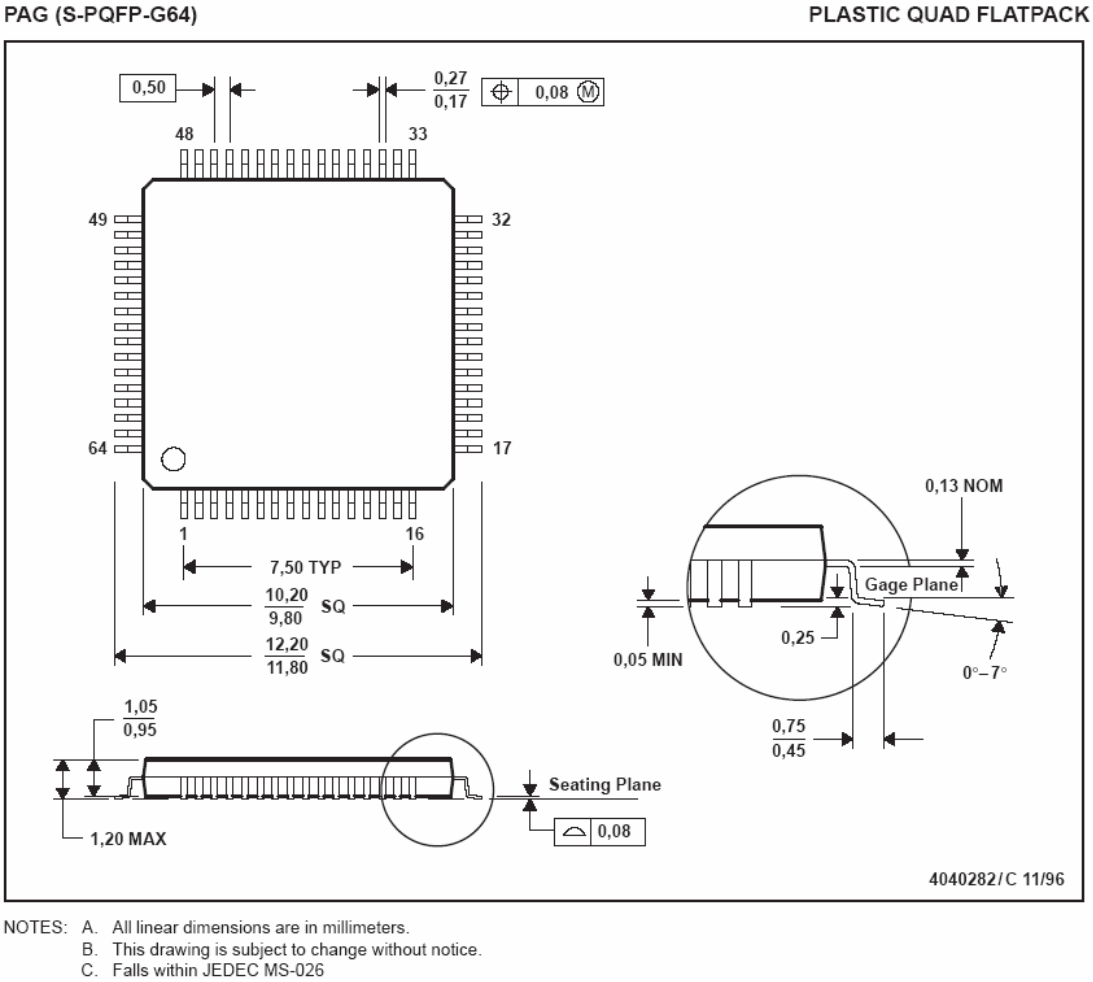

Figure 45. TQFP-64 package

21. Soldering Information

The recommended soldering profiles for both leaded and Pb-free packages are according to IPC/JEDEC J-STD-020.

22. Tray Specification

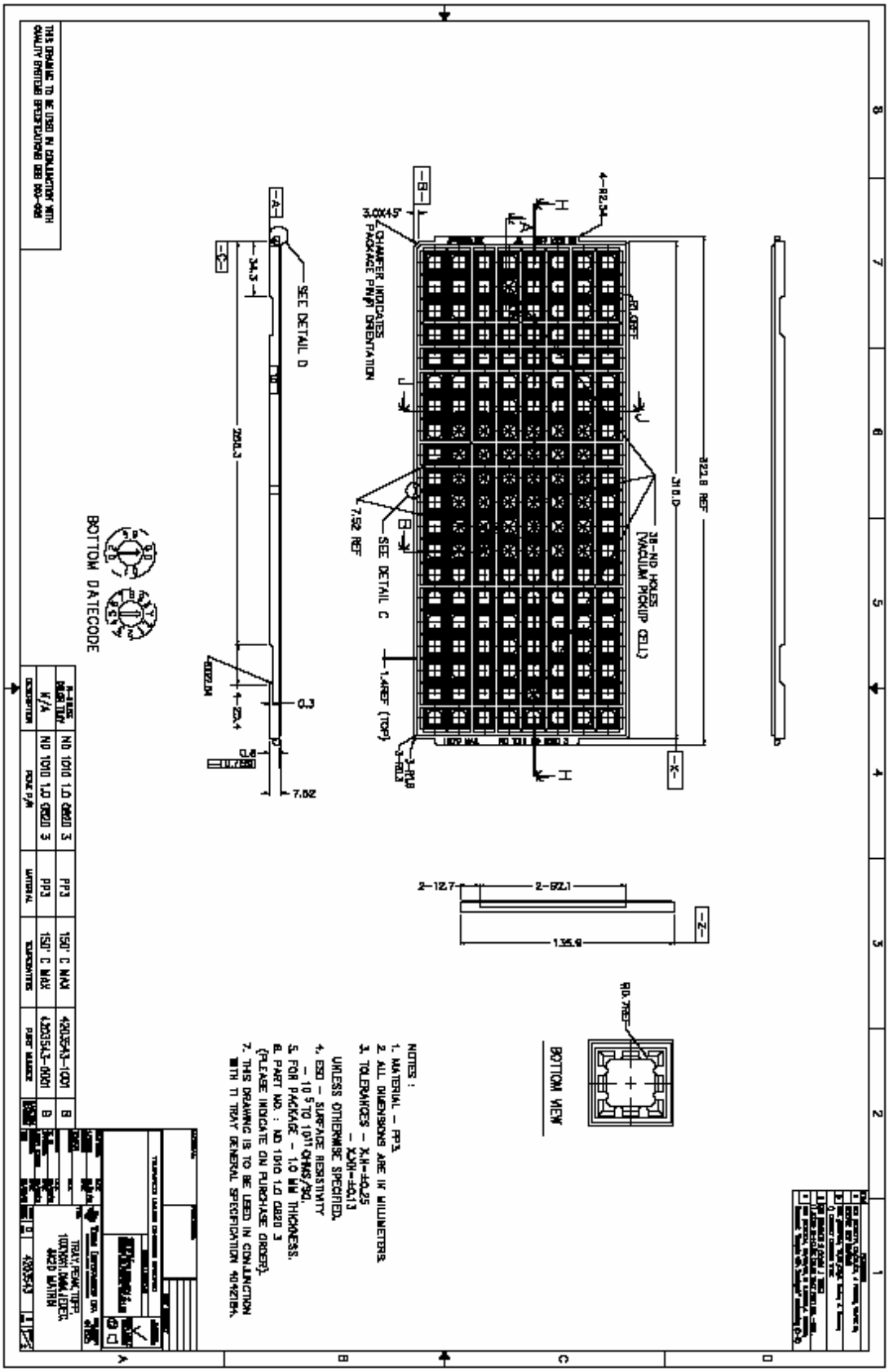
BOTTOM DATECODE
SEE DETAIL D
SEE DETAIL C
38-NO HOLES (VACUUM PICKUP CELL)
CHAMFER INDICATES PACKAGE PIN#1 ORIENTATION
BOTTOM VIEW
NOTES :
1. MATERIAL - PP3.
2. ALL DIMENSIONS ARE IN MILLIMETERS.
3. TOLERANCES - X.H=±0.25
- X.XH=±0.13
UNLESS OTHERWISE SPECIFIED.
4. ESD - SURFACE RESISTIVITY
- 10 5 TO 10 11 OHMS/SQ.
5. FOR PACKAGE - 1.0 MM THICKNESS.
6. PART NO. : ND 1010 1.0 G820 3
(PLEASE INDICATE ON PURCHASE ORDER).
7. THIS DRAWING IS TO BE USED IN CONJUNCTION WITH TI TRAY GENERAL SPECIFICATION 4042184.
TRAY, PEAK, TOPP, 100X101, DAMA, FDEC, 4X20 MATRIX
4203543

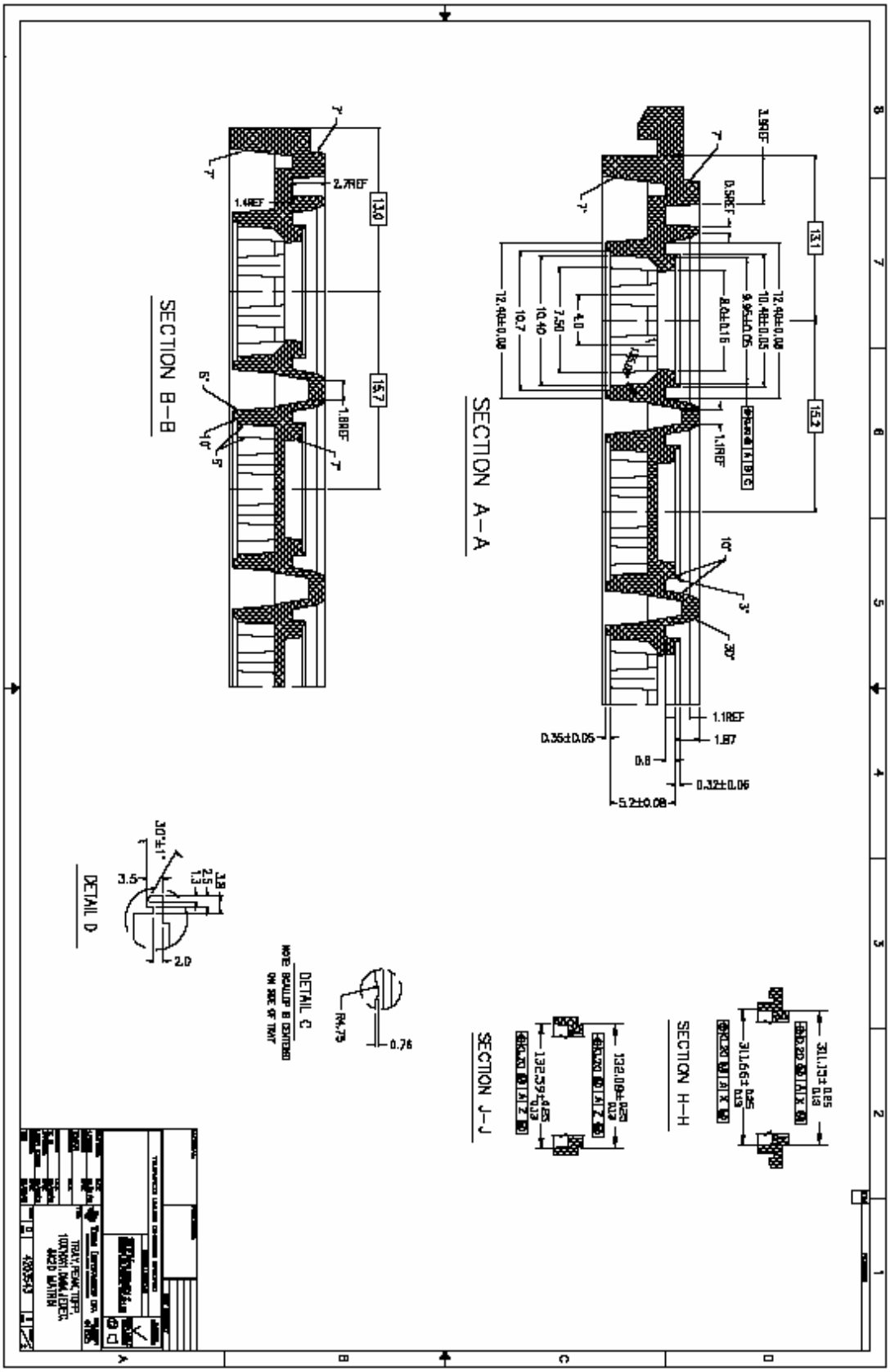
SECTION A–A
SECTION B–B
SECTION H–H
SECTION J–J
DETAIL C
DETAIL D

23. List of Abbreviations

- ADC - Analog to Digital Converter
- AMR – Automatic Meter Reading
- CFB - Cipher Feedback Mode
- CMOS – Complementary Metal Oxide Semiconductor
- CPU – Central Processor Unit
- DES - Data Encryption Standard
- DMA - Direct Memory Access
- FCC – Federal Communication Committee
- FSK - Frequency Shift Keying
- IDE – Integrated Development Environment
- IF - Intermediate Frequency
- ISM – Industrial Scientific Medical
- ISR - Interrupt Service Routine
- LNA - Low Noise Amplifier
- LO - Local Oscillator
- LPF - Loop Filter
- LSB - Least Significant Bit (or Byte)
- MOQ – Minimum Order Quantity
- MSB - Most Significant Bit (or Byte)
- NRZ - Non Return to Zero
- OFB - Output Feedback Mode
- PCB - Printed Circuit Board
- PLL - Phase Locked Loop
- POR - Power On Reset
- PWM - Pulse Width Modulation
- RAM – Random Access Memory
- RF - Radio Frequency
- RSSI - Received Signal Strength Indicator
- RTC – Real-Time Clock
- RX - Receive
- SFR - Special Function Register
- SPI - Serial Peripheral Interface
- SRAM – Static RAM
- SRD - Short Range Device
- TQFP - Thin Quad Flat Pack
- TBD – To Be Defined
- TX - Transmit
- UART - Universal Asynchronous Receiver/Transmitter
- UHF – Ultra High Frequency
- VCO - Voltage Controlled Oscillator
- XOSC - Crystal Oscillator

24. SFR Summary

A summary of all SFRs with address, register names, bit names and reset values are shown in Table 40 below.

Addr	Name	Bit 7	Bit 6	Bit 5	Bit 4	Bit 3	Bit 2	Bit 1	Bit 0	Reset	Page
0x80	P0	P0.7	P0.6	P0.5	P0.4	P0.3	P0.2	P0.1	P0.0	00001111	49
0x81	SP	SP.7	SP.6	SP.5	SP.4	SP.3	SP.2	SP.1	SP.0	00000111	24
0x82	DPL0	DPL0.7	DPL0.6	DPL0.5	DPL0.4	DPL0.3	DPL0.2	DPL0.1	DPL0.0	00000000	21
0x83	DPH0	DPH0.7	DPH0.6	DPH0.5	DPH0.4	DPH0.3	DPH0.2	DPH0.1	DPH0.0	00000000	21
0x84	DPL1	DPL1.7	DPL1.6	DPL1.5	DPL1.4	DPL1.3	DPL1.2	DPL1.1	DPL1.0	00000000	21
0x85	DPH1	DPH1.7	DPH1.6	DPH1.5	DPH1.4	DPH1.3	DPH1.2	DPH1.1	DPH1.0	00000000	21
0x86	DPS	-	-	-	-	-	-	-	SEL	00000000	22
0x87	PCON	SMOD0	-	-	-	GF1	GF0	STOP	IDLE	00110000	36
0x88	TCON	TF1	TR1	TF0	TR0	IE1	IT1	IE0	IT0	00000000	54
0x89	TMOD	GATE	C/T	M1	M0	GATE	C/T	M1	M0	00000000	53
0x8A	TL0	TL0.7	TL0.6	TL0.5	TL0.4	TL0.3	TL0.2	TL0.1	TL0.0	00000000	52
0x8B	TL1	TL1.7	TL1.6	TL1.5	TL1.4	TL1.3	TL1.2	TL1.1	TL1.0	00000000	52
0x8C	TH0	TH0.7	TH0.6	TH0.5	TH0.4	TH0.3	TH0.2	TH0.1	TH0.0	00000000	52
0x8D	TH1	TH1.7	TH1.6	TH1.5	TH1.4	TH1.3	TH1.2	TH1.1	TH1.0	00000000	52
0x8E	CKCON	-	-	T2M	T1M	T0M	MD2	MD1	MD0	00000001	55
0x8F	-	-	-	-	-	-	-	-	-	00000000	-
0x90	P1	P1.7	P1.6	P1.5	P1.4	P1.3	P1.2	P1.1	P1.0	11111111	49
0x91	EXIF	TF3	ADIF	TF2	RFIF	-	-	-	-	00001000	30
0x92	MPAGE	MPAGE7	MPAGE6	MPAGE5	MPAGE4	MPAGE3	MPAGE2	MPAGE1	MPAGE0	00000000	22
0x93	ADCON	AD_PD	-	ADCM1	ADCM0	ADCREF	ADCRUN	ADADR1	ADADR0	10000000	81
0x94	ADDATL	ADDAT7	ADDAT6	ADDAT5	ADDAT4	ADDAT3	ADDAT2	ADDAT1	ADDAT0	00000000	81
0x95	ADDATH	-	-	-	-	-	-	ADDAT9	ADDAT8	00000000	81
0x96	ADCON2	ADCIE	ADCIF	ADCDIV5	ADCDIV4	ADCDIV3	ADCDIV2	ADCDIV1	ADCDIV0	00000000	82
0x97	ADTRH	ADTRH7	ADTRH6	ADTRH5	ADTRH4	ADTRH3	ADTRH2	ADTRH1	ADTRH0	00000000	82
0x98	SCON0	SM0_0	SM1_0	SM2_0	REN_0	TB8_0	RB8_0	TI_0	RI_0	00000000	67
0x99	SBUF0	SBUF0.7	SBUF0.6	SBUF0.5	SBUF0.4	SBUF0.3	SBUF0.2	SBUF0.1	SBUF0.0	00000000	66
0x9A	.	-	-	.	.	.	.	.	.	00000000	-
0x9B	-	-	-	-	-	-	-	-	-	00000000	-
0x9C	-	-	-	-	-	-	-	-	-	00000000	-
0x9D	-	-	-	-	-	-	-	-	-	00000000	-
0x9E	-	-	-	-	-	-	-	-	-	00000000	-
0x9F	CHVER	CHIP_TYPE5	CHIP_TYPE4	CHIP_TYPE3	CHIP_TYPE2	CHIP_TYPE1	CHIP_TYPE0	CHIP_REV1	CHIP_REV0	00000001	45

Addr	Name	Bit 7	Bit 6	Bit 5	Bit 4	Bit 3	Bit 2	Bit 1	Bit 0	Reset	Page
0xA0	P2	P2.7	P2.6	P2.5	P2.4	P2.3	P2.2	P2.1	P2.0	11111111	50
0xA1	SPCR	-	-	SPE	DORD	CPOL	CPHA	SPR1	SPR0	00000000	72
0xA2	SPDR	SPDR7	SPDR6	SPDR5	SPDR4	SPDR3	SPDR2	SPDR1	SPDR0	00000000	72
0xA3	SPSR	-	-	-	-	-	-	SPA	WCOL	00000000	72
0xA4	P0DIR	-	-	-	-	P0DIR3	P0DIR2	P0DIR1	P0DIR0	00001111	50
0xA5	P1DIR	P1DIR7	P1DIR6	P1DIR5	P1DIR4	P1DIR3	P1DIR2	P1DIR1	P1DIR0	11111111	50
0xA6	P2DIR	P2DIR7	P2DIR6	P2DIR5	P2DIR4	P2DIR3	P2DIR2	P2DIR1	P2DIR0	11111111	51
0xA7	P3DIR	-	-	P3DIR5	P3DIR4	P3DIR3	P3DIR2	P3DIR1	P3DIR0	00111111	51
0xA8	IE	EA	-	-	ES0	ET1	EX1	ET0	EX0	00000000	29
0xA9	TCON2	-	-	-	-	TR3	M3	TR2	M2	00000000	59
0xAA	T2PRE	T2PRE7	T2PRE6	T2PRE5	T2PRE4	T2PRE3	T2PRE2	T2PRE1	T2PRE0	00000000	60
0xAB	T3PRE	T3PRE7	T3PRE6	T3PRE5	T3PRE4	T3PRE3	T3PRE2	T3PRE1	T3PRE0	00000000	60
0xAC	T2	T2.7	T2.6	T2.5	T2.4	T2.3	T2.2	T2.1	T2.0	00000000	60
0xAD	T3	T3.7	T3.6	T3.5	T3.4	T3.3	T3.2	T3.1	T3.0	00000000	60
0xAE	FLADR	FLADR7	FLADR6	FLADR5	FLADR4	FLADR3	FLADR2	FLADR1	FLADR0	00000000	43
0xAF	FLCON	-	FLASH_LP1	FLASH_LP0	WRFLASH	RMADR3	RMADR2	RMADR1	RMADR0	00000000	43
0xB0	P3	-	-	P3.5	P3.4	P3.3	P3.2	P3.1	P3.0	00111111	50
0xB1	-	-	-	-	-	-	-	-	-	00000000	-
0xB2	-	-	-	-	-	-	-	-	-	00000000	-
0xB3	-	-	-	-	-	-	-	-	-	00000000	-
0xB4	CRPINI0	CRPINI0.7	CRPINI0.6	CRPINI0.5	CRPINI0.4	CRPINI0.3	CRPINI0.2	CRPINI0.1	CRPINI0.0	00000000	78
0xB5	CRPINI1	CRPINI1.7	CRPINI1.6	CRPINI1.5	CRPINI1.4	CRPINI1.3	CRPINI1.2	CRPINI1.1	CRPINI1.0	00000000	78
0xB6	CRPINI2	CRPINI2.7	CRPINI2.6	CRPINI2.5	CRPINI2.4	CRPINI2.3	CRPINI2.2	CRPINI2.1	CRPINI2.0	00000000	78
0xB7	CRPINI3	CRPINI3.7	CRPINI3.6	CRPINI3.5	CRPINI3.4	CRPINI3.3	CRPINI3.2	CRPINI3.1	CRPINI3.0	00000000	78
0xB8	IP	-	-	-	PS0	PT1	PX1	PT0	PX0	10000000	31
0xB9	RDATA	RDATA7	RDATA6	RDATA5	RDATA4	RDATA3	RDATA2	RDATA1	RDATA0	00000000	45
0xBA	RADRL	RADR15	RADR14	RADR13	RADR12	RADR11	RADR10	RADR9	RADR8	00000000	45
0xBB	RADRH	RADR7	RADR6	RADR5	RADR4	RADR3	RADR2	RADR1	RADR0	00000000	45
0xBC	CRPINI4	CRPINI4.7	CRPINI4.6	CRPINI4.5	CRPINI4.4	CRPINI4.3	CRPINI4.2	CRPINI4.1	CRPINI4.0	00000000	78
0xBD	CRPINI5	CRPINI5.7	CRPINI5.6	CRPINI5.5	CRPINI5.4	CRPINI5.3	CRPINI5.2	CRPINI5.1	CRPINI5.0	00000000	78
0xBE	CRPINI6	CRPINI6.7	CRPINI6.6	CRPINI6.5	CRPINI6.4	CRPINI6.3	CRPINI6.2	CRPINI6.1	CRPINI6.0	00000000	78
0xBF	CRPINI7	CRPINI7.7	CRPINI7.6	CRPINI7.5	CRPINI7.4	CRPINI7.3	CRPINI7.2	CRPINI7.1	CRPINI7.0	00000000	78
0xC0	SCON1	SM0_1	SM1_1	SM2_1	REN_1	TB8_1	RB8_1	TI_1	RI_1	00000000	68
0xC1	SBUF1	SBUF1.7	SBUF1.6	SBUF1.5	SBUF1.4	SBUF1.3	SBUF1.2	SBUF1.1	SBUF1.0	00000000	67
0xC2	RFCON	-	-	-	MVIOL	MLIMIT2	MLIMIT1	MLIMIT0	BYTEMODE	00000110	101
0xC3	CRPCON	-	CRPIE	CRPIF	LOADKEYS	CRPMD	ENCDEC	TRIDES	CRPEN	00000000	76
0xC4	CRPKEY	CRPKEY7	CRPKEY6	CRPKEY5	CRPKEY4	CRPKEY3	CRPKEY2	CRPKEY1	CRPKEY0	00000000	77

Addr	Name	Bit 7	Bit 6	Bit 5	Bit 4	Bit 3	Bit 2	Bit 1	Bit 0	Reset	Page
0xC5	CRPDAT	CRPDAT7	CRPDAT6	CRPDAT5	CRPDAT4	CRPDAT3	CRPDAT2	CRPDAT1	CRPDAT0	00000000	77
0xC6	CRPCNT	CRPCNT7	CRPCNT6	CRPCNT5	CRPCNT4	CRPCNT3	CRPCNT2	CRPCNT1	CRPCNT0	00000000	77
0xC7	RANCON	-	-	-	-	-	-	RANEN	RANBIT	00000000	78
0xC8	RFMAIN	RXTX	F_REG	RX_PD	TX_PD	FS_PD	CORE_PD	BIAS_PD	-	00111000	89
0xC9	RFBUF	RFBUF7	RFBUF6	RFBUF5	RFBUF4	RFBUF3	RFBUF2	RFBUF1	RFBUF0	00000000	95
0xCA	FREQ_0A	FREQ_A7	FREQ_A6	FREQ_A5	FREQ_A4	FREQ_A3	FREQ_A2	FREQ_A1	FREQ_A0	11001011	108
0xCB	FREQ_1A	FREQ_A15	FREQ_A14	FREQ_A13	FREQ_A12	FREQ_A11	FREQ_A10	FREQ_A9	FREQ_A**8**	10100000	108
0xCC	FREQ_2A	FREQ_A23	FREQ_A22	FREQ_A21	FREQ_A20	FREQ_A19	FREQ_A18	FREQ_A17	FREQ_A16	01110101	108
0xCD	FREQ_0B	FREQ_B7	FREQ_B6	FREQ_B5	FREQ_B4	FREQ_B3	FREQ_B2	FREQ_B1	FREQ_B0	01001110	109
0xCE	FREQ_1B	FREQ_B15	FREQ_B14	FREQ_B13	FREQ_B12	FREQ_B11	FREQ_B10	FREQ_B9	FREQ_B**8**	10100101	108
0xCF	FREQ_2B	FREQ_B23	FREQ_B22	FREQ_B21	FREQ_B20	FREQ_B19	FREQ_B18	FREQ_B17	FREQ_B16	01110101	108
0xD0	PSW	CY	AC	F0	RS1	RS0	OV	F1	P	00000000	23
0xD1	X32CON	-	-	-	-	-	X32_BYPASS	X32_PD	CMODE	00000010	36
0xD2	WDT	-	-	-	WDTSE	WDTEN	WDTCLR	WDTPRE1	WDTPRE0	00001011	63
0xD3	PDET	PEN	PLEN6	PLEN5	PLEN4	PLEN3	PLEN2	PLEN1	PLEN0	00000000	102
0xD4	BSYNC	BSYNC7	BSYNC6	BSYNC5	BSYNC4	BSYNC3	BSYNC2	BSYNC1	BSYNC0	00000000	102
0xD5	-	-	-	-	-	-	-	-	-	00000000	-
0xD6	-	-	-	-	-	-	-	-	-	00000000	-
0xD7	-	-	-	-	-	-	-	-	-	00000000	-
0xD8	EICON	-	-	FDIE	FDIF	RTCIF	-	-	-	01000000	30
0xD9	MODEM2	-	PLO6	PLO5	PLO4	PLO3	PLO2	PLO1	PLO0	00010110	100
0xDA	MODEM1	-	LOCK_AVG_IN	LOCK_AVG_MO	LOCK_AVG_STA	SETTLING1	SETTLING0	PEAKDETECT	MODEM_RESET	00101111	98
0xDB	MODEM0	BAUDRATE2	BAUDRATE1	BAUDRATE0	DATA_FORMAT1	DATA_FORMAT0	XOSC_FREQ2	XOSC_FREQ1	XOSC_FREQ0	01110001	92
0xDC	MATCH	RX_MATCH3	RX_MATCH2	RX_MATCH1	RX_MATCH0	TX_MATCH3	TX_MATCH2	TX_MATCH1	TX_MATCH0	00000000	120
0xDD	FLTIM	-	-	FLWCTIME5	FLWCTIME4	FLWCTIME3	FLWCTIME2	FLWCTIME1	FLWCTIME0	00001010	43
0xDE	-	-	-	-	-	-	-	-	-	00000000	-
0xDF	-	-	-	-	-	-	-	-	-	00000000	-
0xE0	ACC	ACC7	ACC6	ACC5	ACC4	ACC3	ACC2	ACC1	ACC0	00000000	23
0xE1	CURRENT	VCO_CURRENT3	VCO_CURRENT2	VCO_CURRENT1	VCO_CURRENT0	LO_DRIVE1	LO_DRIVE0	PA_DRIVE1	PA_DRIVE0	11001010	118
0xE2	PA_POW	PA_HIGHPOWER	PA_HIGHPOWER	PA_HIGHPOWER	PA_HIGHPOWER	PA_LOWPOWER	PA_LOWPOWER	PA_LOWPOWER	PA_LOWPOWER	00001111	123
0xE3	PLL	REFDIV4	REFDIV3	REFDIV2	REFDIV1	REFDIV0	ALARM_DISABL	ALARM_H	ALARM_L	000100xx	109
0xE4	LOCK	-	-	-	-	PLL_LOCK_ ACCURACY	PLL_LOCK_ LENGTH	LOCK_INSTANT	LOCK_ CONTINUOUS	000000xx	110
0xE5	CAL	CAL_START	CAL_DUAL	CAL_WAIT	CAL_CURRENT	CAL_COMPLETE	CAL_ITERATE2	CAL_ITERATE1	CAL_ITERATE0	00000101	114

Addr	Name	Bit 7	Bit 6	Bit 5	Bit 4	Bit 3	Bit 2	Bit 1	Bit 0	Reset	Page
0xE6	PRESCALE	PRE_SWING1	PRE_SWING0	PRE_CURRENT1	PRE_CURRENT0	IF_INPUT	IF_FRONT	PRESCALE.1	PRESCALE.0	00000000	129
0xE7	RESERVED	RESERVED.7	RESERVED.6	RESERVED.5	RESERVED.4	RESERVED.3	RESERVED.2	RESERVED.1	RESERVED.0	00000000	45
0xE8	EIE	-	-	-	RTCIE	ET3	ADIE	ET2	RFIE	11100000	29
0xE9	FSDELAY	FSDELAY7	FSDELAY6	FSDELAY5	FSDELAY4	FSDELAY3	FSDELAY2	FSDELAY1	FSDELAY0	00101111	129
0xEA	FSEP0	FSEP7	FSEP6	FSEP5	FSEP4	FSEP3	FSEP2	FSEP1	FSEP0	01011001	109
0xEB	FSEP1	-	-	-	-	-	FSEP10	FSEP9	FSEP8	00000000	109
0xEC	FSCTRL	-	-	-	EXT_FILTER	DITHER1	DITHER0	SHAPE	FS_RESET_N	00000001	130
0xED	RTCON	RTEN	RT6	RT5	RT4	RT3	RT2	RT1	RT0	00000000	65
0xEE	FREND	-	-	LNA_BUF_CUR	LNA_CURRENT1	LNA_CURRENT0	IF_EXTERNAL	RSSI	-	00000000	119
0xEF	TESTMUX	-	-	-	-	TESTSEL3	TESTSEL2	TESTSEL1	TESTSEL0	00000000	130
0xF0	B	B.7	B.6	B.5	B.4	B.3	B.2	B.1	B.0	00000000	23
0xF1	FSHAPE7	FSHAPE7.7	FSHAPE7.6	FSHAPE7.5	FSHAPE7.4	FSHAPE7.3	FSHAPE7.2	FSHAPE7.1	FSHAPE7.0	00011100	129
0xF2	FSHAPE6	FSHAPE6.7	FSHAPE6.6	FSHAPE6.5	FSHAPE6.4	FSHAPE6.3	FSHAPE6.2	FSHAPE6.1	FSHAPE6.0	00010110	129
0xF3	FSHAPE5	FSHAPE5.7	FSHAPE5.6	FSHAPE5.5	FSHAPE5.4	FSHAPE5.3	FSHAPE5.2	FSHAPE5.1	FSHAPE5.0	00010000	129
0xF4	FSHAPE4	FSHAPE4.7	FSHAPE4.6	FSHAPE4.5	FSHAPE4.4	FSHAPE4.3	FSHAPE4.2	FSHAPE4.1	FSHAPE4.0	00001010	129
0xF5	FSHAPE3	FSHAPE3.7	FSHAPE3.6	FSHAPE3.5	FSHAPE3.4	FSHAPE3.3	FSHAPE3.2	FSHAPE3.1	FSHAPE3.0	00000110	129
0xF6	FSHAPE2	FSHAPE2.7	FSHAPE2.6	FSHAPE2.5	FSHAPE2.4	FSHAPE2.3	FSHAPE2.2	FSHAPE2.1	FSHAPE2.0	00000011	129
0xF7	FSHAPE1	FSHAPE1.7	FSHAPE1.6	FSHAPE1.5	FSHAPE1.4	FSHAPE1.3	FSHAPE1.2	FSHAPE1.1	FSHAPE1.0	00000001	129
0xF8	EIP	-	-	-	PRTC	PT3	PAD	PT2	PRF	11100000	31
0xF9	TEST0	-	-	-	-	VCO_ARRAY3	VCO_ARRAY2	VCO_ARRAY1	VCO_ARRAY0	0000xxxx	115
0xFA	TEST1	-	-	-	-	CAL_DAC3	CAL_DAC2	CAL_DAC1	CAL_DAC0	0000xxxx	115
0xFB	TEST2	-	-	-	CHP_CURRENT4	CHP_CURRENT3	CHP_CURRENT2	CHP_CURRENT1	CHP_CURRENT0	000xxxxx	115
0xFC	TEST3	-	-	-	BREAK_LOOP	CAL_DAC_ OPEN3	CAL_DAC_ OPEN2	CAL_DAC_ OPEN1	CAL_DAC_ OPEN0	00000100	115
0xFD	TEST4	-	-	L2KIO0.5	L2KIO0.4	L2KIO0.3	L2KIO0.2	L2KIO0.1	L2KIO0.0	00100101	115
0xFE	TEST5	-	-	CHP_DISABLE	VCO_OVERRIDE	VCO_AO3	VCO_AO2	VCO_AO1	VCO_AO0	00001000	115
0xFF	TEST6	LOOPFILTER_ TP1	LOOPFILTER_ TP2	CHP_OVERRIDE	CHP_CO4	CHP_CO3	CHP_CO2	CHP_CO1	CHP_CO0	00010000	114

Table 40. SFR Summary (sorted by address)

25. Alphabetic Register Index

ACC (0xE0) - Accumulator Register 23
ADCON (0x93) - ADC Control Register 81
ADCON 2(0x96) - ADC Control Register 2 82
ADDATH (0x95) - ADC Data Register, High Bits 81
ADDATL (0x94) - ADC Data Register, Low Byte 81
ADTRH (0x97) - ADC Threshold Register 82
B (0xF0) - B Register 23
BSYNC (0xD4) - Byte Synchronisation Register 102
CAL (0xE5) - PLL Calibration Control Register 114
CHVER (0x9F) - Chip Version / Revision Register 45
CKCON (0x8E) - Timer Clock rate Control Register 55
CRPCNT (0xC6) – Encryption / Decryption Counter 77
CRPCON (0xC3) - Encryption / Decryption Control Register 77
CRPDAT (0xC5) - Encryption / Decryption Data Location Register 77
CRPINIn, n∈{0..7} (0xB4-0xB7, 0xBC-0xBF) - DES Initialisation Vector 78
CRPKEY (0xC4) - Encryption / Decryption Key Location Register 77
CURRENT (0xE1) - RF Current Control Register 118
DPH0 (0x83) - Data Pointer 0, high byte 21
DPH1 (0x85) - Data Pointer 1, high byte 21
DPL0 (0x82) - Data Pointer 0, low byte 21
DPL1 (0x84) - Data Pointer 1, low byte 21
DPS (0x86) - Data Pointer Select 22
EICON (0xD8) - Extended Interrupt Control 30
EIE (0xE8) - Extended Interrupt Enable Register 29
EIP (0xF8) - Extended Interrupt Priority Register 31
EXIF (0x91) - Extended Interrupt Flag 30
FLADR (0xAE) - Flash Write Address Register 43
FLCON (0xAF) - Flash Write Control Register 43
FLTIM (0xDD) - Flash Write Timing Register 43
FREND (0xEE) - Front End Control Register 119
FREQ_0A (0xCA) – Frequency A, Control Register 0 108
FREQ_0B (0xCD) - Frequency B, Control Register 0 109
FREQ_1A (0xCB) – Frequency A, Control Register 1 108
FREQ_1B (0xCE) - Frequency B, Control Register 1 108

FREQ_2A (0xCC) – Frequency A, Control Register 2 108
FREQ_2B (0xCF) - Frequency B, Control Register 2 108
FSCTRL (0xEC) - Frequency Synthesiser Control Register 130
FSDELAY (0xE9) - Frequency Shaping Delay Control Register 129
FSEP0 (0xEA) - Frequency Separation Control Register 0 109
FSEP1 (0xEB) - Frequency Separation Control Register 1 109
FSHAPEn (0xF1 - 0xF7), n∈1..7 - Frequency Shaping Register n 129
IE (0xA8) - Interrupt Enable Register 29
IP (0xB8) - Interrupt Priority Register 31
LOCK (0xE4) - PLL Lock Register 110
MATCH (0xDC) - Match Capacitor Array Control Register 120
MODEM0 (0xDB) - Modem Control Register 0 93
MODEM1 (0xDA) - Modem Control Register 1 100
MODEM2 (0xD9) - Modem Control Register 2 100
MPAGE (0x92) - Memory Page Select Register 22
P0 (0x80) - Port 0 Data Register 49
P0DIR (0xA4) - Port 0 Direction Register 50
P1 (0x90) - Port 1 Data Register 49
P1DIR (0xA5) - Port 1 Direction Register 50
P2 (0xA0) - Port 2 Data Register 50
P2DIR (0xA6) - Port 2 Direction Register 51
P3 (0xB0) - Port 3 Data Register 50
P3DIR (0xA7) - Port 3 Direction Register 51
PA_POW (0xE2) - PA Output Power Control Register 125
PCON (0x87) - Power Control Register 36
PDET (0xD3) - Preamble Detection Control Register 102
PLL (0xE3) - PLL Control Register 109
PRESCALER (0xE6) - Prescaler Control Register 130
PSW (0xD0) - Program Status Word 23
RADRH (0xBB) - Replacement address, high byte 45
RADRL (0xBA) - Replacement address, low byte 45
RANCON (0xC7) - Random Bit Generator Control Register 78
RDATA (0xB9) - Replacement Data 45
RESERVED (0xE7) - Reserved register, used by Chipcon debugger software 45
RFBUF (0xC9) - RF Data Buffer 95
RFCON (0xC2) - RF Control Register 101

RFMAIN (0xC8) - RF Main Control Register 89
RTCON (0xED) - Realtime Clock Control Register 65
SBUF0 (0x99) - Serial Port 0, data buffer 67
SBUF1 (0xC1) – Serial Port 1, data buffer 67
SCON0 (0x98) - Serial Port 0 Control Register 67
SCON1 (0xC0) - Serial Port 1 Control Register 68
SP (0x81) - Stack Pointer 24
SPCR (0xA1) - SPI Control Register 72
SPDR (0xA2) - SPI Data Register 72
SPSR (0xA3) - SPI Status Register 72
T2 (0xAC) - Timer 2 Low byte counter value 60
T2PRE (0xAA) - Timer 2 Prescaler Control 60
T3 (0xAD) - Timer 3 Low byte counter value 60
T3PRE (0xAB) - Timer 3 Prescaler Control 60
TCON (0x88) - Timer / Counter 0 and 1 control register 54
TCON2 (0xA9) - Timer Control register 2 59
TEST0 (0xF9) – PLL Test Register 0 115
TEST1 (0xFA) – PLL Test Register 1 115
TEST2 (0xFB) – PLL Test Register 2 115
TEST3 (0xFC) – PLL Test Register 3 115
TEST4 (0xFD) – PLL Test Register 4 115
TEST5 (0xFE) – PLL Test Register 5 115
TEST6 (0xFF) – PLL Test Register 6 114
TESTMUX (0xEF) - Test Multiplexer Control Register (for prototype testing) 130
TH0 (0x8C) - Timer / Counter 0 High byte counter value 52
TH1 (0x8D) - Timer / Counter 1 High byte counter value 52
TL0 (0x8A) - Timer / Counter 0 Low byte counter value 52
TL1 (0x8B) - Timer / Counter 1 Low byte counter value 52
TMOD (0x89) - Timer / Counter 0 and 1 Mode register 53
WDT (0xD2) - Watchdog Timer Control Register 63
X32CON (0xD1) - 32.768 kHz Crystal Oscillator Control Register 36

26. Ordering Information

Orderable Device	Status (1)	Package Type	Package Drawing	Pins	Package Qty	Eco Plan (2)	Lead Finish	MSL Peak Temp (3)
CC1010PAG	Active	TQFP	PAG	64	160	Green (RoHS & no Sb/Br)	Cu NiPdAu	LEVEL3-260C 1 YEAR
CC1010PAGR	Active	TQFP	PAG	64	1500	Green (RoHS & no Sb/Br)	Cu NiPdAu	LEVEL3-260C 1 YEAR

Orderable Evaluation Module	Description	Minimum Order Quantity
CC1010DK-433	CC1010 Development Kit, 433 MHz	1
CC1010DK-868	CC1010 Development Kit, 868/915 MHz	1

(1) The marketing status values are defined as follows:
ACTIVE: Product device recommended for new designs.
LIFEBUY: TI has announced that the device will be discontinued, and a lifetime-buy period is in effect.
NRND: Not recommended for new designs. Device is in production to support existing customers, but TI does not recommend using this part in a new design.
PREVIEW: Device has been announced but is not in production. Samples may or may not be available.
OBSOLETE: TI has discontinued the production of the device.

(2) Eco Plan - The planned eco-friendly classification: Pb-Free (RoHS), Pb-Free (RoHS Exempt), or Green (RoHS & no Sb/Br) - please check http://www.ti.com/productcontent for the latest availability information and additional product content details.
TBD: The Pb-Free/Green conversion plan has not been defined.
Pb-Free (RoHS): TI's terms "Lead-Free" or "Pb-Free" mean semiconductor products that are compatible with the current RoHS requirements for all 6 substances, including the requirement that lead not exceed 0.1% by weight in homogeneous materials. Where designed to be soldered at high temperatures, TI Pb-Free products are suitable for use in specified lead-free processes.
Pb-Free (RoHS Exempt): This component has a RoHS exemption for either 1) lead-based flip-chip solder bumps used between the die and package, or 2) lead-based die adhesive used between the die and leadframe. The component is otherwise considered Pb-Free (RoHS compatible) as defined above.
Green (RoHS & no Sb/Br): TI defines "Green" to mean Pb-Free (RoHS compatible), and free of Bromine (Br) and Antimony (Sb) based flame retardants (Br or Sb do not exceed 0.1% by weight in homogeneous material)

(3) MSL, Peak Temp. -- The Moisture Sensitivity Level rating according to the JEDEC industry standard classifications, and peak solder temperature.

Important Information and Disclaimer: The information provided on this page represents TI's knowledge and belief as of the date that it is provided. TI bases its knowledge and belief on information provided by third parties, and makes no representation or warranty as to the accuracy of such information. Efforts are underway to better integrate information from third parties. TI has taken and continues to take reasonable steps to provide representative and accurate information but may not have conducted destructive testing or chemical analysis on incoming materials and chemicals. TI and TI suppliers consider certain information to be proprietary, and thus CAS numbers and other limited information may not be available for release.

In no event shall TI's liability arising out of such information exceed the total purchase price of the TI part(s) at issue in this document sold by TI to Customer on an annual basis.

27. General Information

27.1 Document History

Revision	Date	Description/Changes
SWRS047A	2009-09-18	Removed logo from header New package description New ordering information Removed chapter on Package Marking Changes to chapter on Tray Specification
SWRS047 (rev 1.3)	2004-12-17	Added history table. Various corrections and clarifications. Preliminary status removed. Added Smith charts for LNA input impedance and inactive PA input impedance. Added sensitivity vs. data rate information. Added information about power consumption of Schmitt-trigger input. Added power consumption spec for main crystal oscillator. Added chapter numbering. Reorganized electrical specifications. Ordering info updated. Added current consumption for Power-on reset circuit. Added recommended PCB footprint. Added section about PA “splattering”. Added specification for ADC input voltage. Added specification for 32 kHz oscillator crystal load capacitance. Added information about flash programming times. Added RoHS Pb-free chip and sample kit ordering information.

TAPE AND REEL INFORMATION

REEL DIMENSIONS

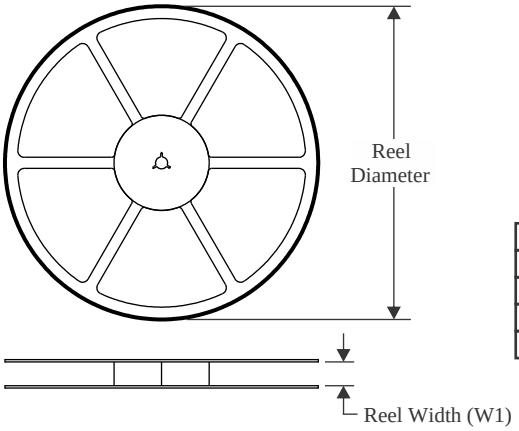

TAPE DIMENSIONS

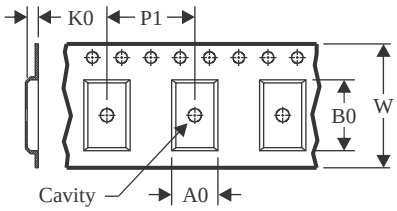

A0	Dimension designed to accommodate the component width
B0	Dimension designed to accommodate the component length
K0	Dimension designed to accommodate the component thickness
W	Overall width of the carrier tape
P1	Pitch between successive cavity centers

QUADRANT ASSIGNMENTS FOR PIN 1 ORIENTATION IN TAPE

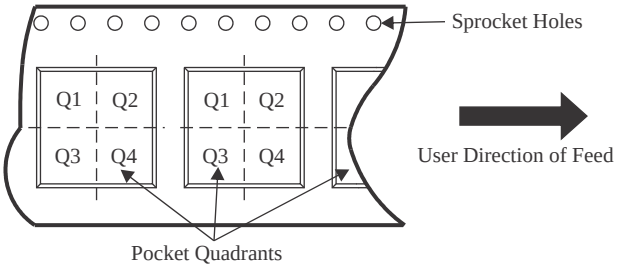

*All dimensions are nominal

Device	Package Type	Package Drawing	Pins	SPQ	Reel Diameter (mm)	Reel Width W1 (mm)	A0 (mm)	B0 (mm)	K0 (mm)	P1 (mm)	W (mm)	Pin1 Quadrant
CC1010PAGR	TQFP	PAG	64	1500	330.0	24.4	12.35	12.35	1.85	16.0	24.0	Q2

TAPE AND REEL BOX DIMENSIONS

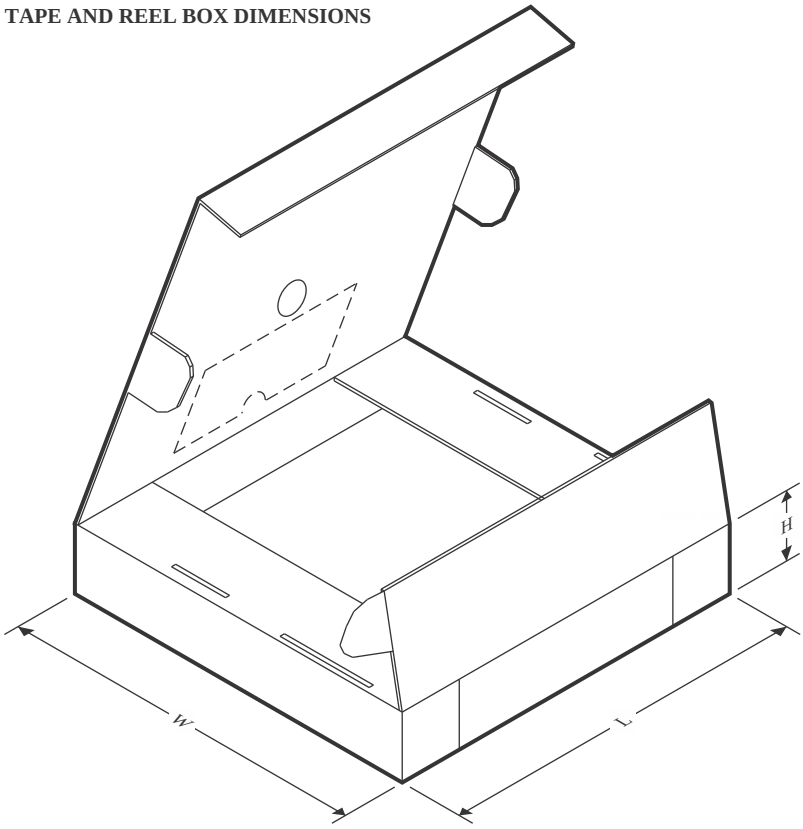

*All dimensions are nominal

Device	Package Type	Package Drawing	Pins	SPQ	Length (mm)	Width (mm)	Height (mm)
CC1010PAGR	TQFP	PAG	64	1500	378.0	70.0	346.0

TRAY

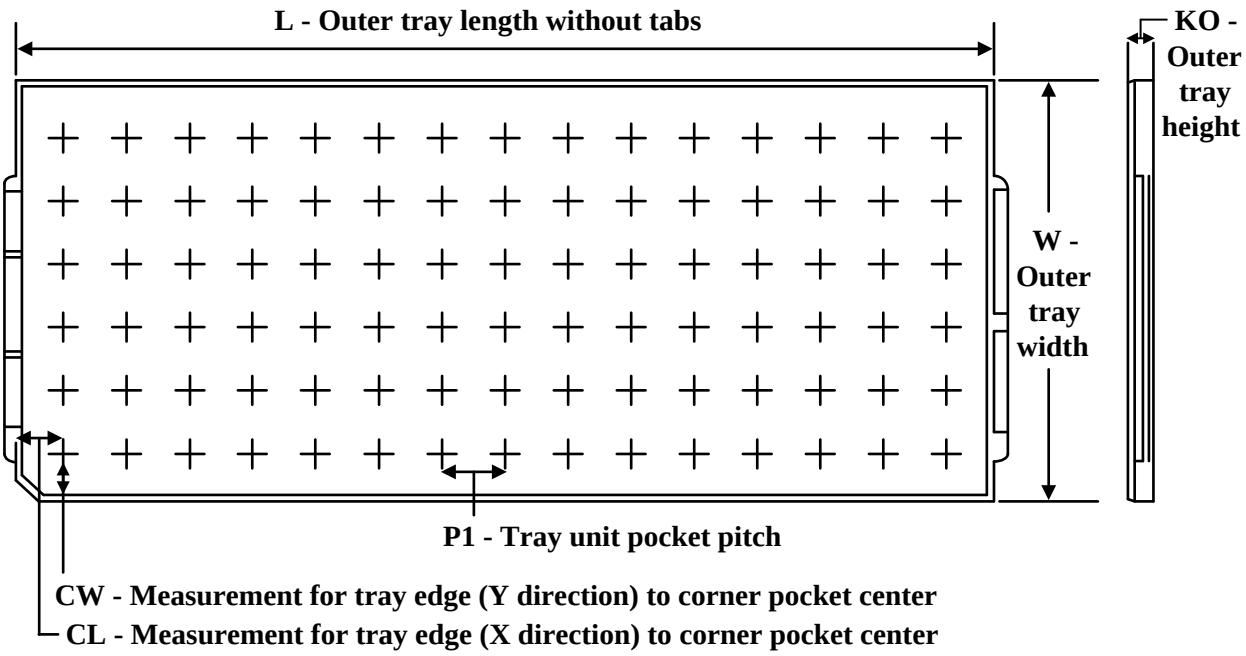

Chamfer on Tray corner indicates Pin 1 orientation of packed units.

*All dimensions are nominal

Device	Package Name	Package Type	Pins	SPQ	Unit array matrix	Max temperature (°C)	L (mm)	W (mm)	K0 (µm)	P1 (mm)	CL (mm)	CW (mm)
CC1010-RTY1	PAG	TQFP	64	160	14x35	150	322.6	135.9	7620	15.2	13.1	13
CC1010PAG	PAG	TQFP	64	160	14x35	150	322.6	135.9	7620	15.2	13.1	13
CC1010PAG.B	PAG	TQFP	64	160	14x35	150	322.6	135.9	7620	15.2	13.1	13

PAG (S-PQFP-G64) **PLASTIC QUAD FLATPACK**

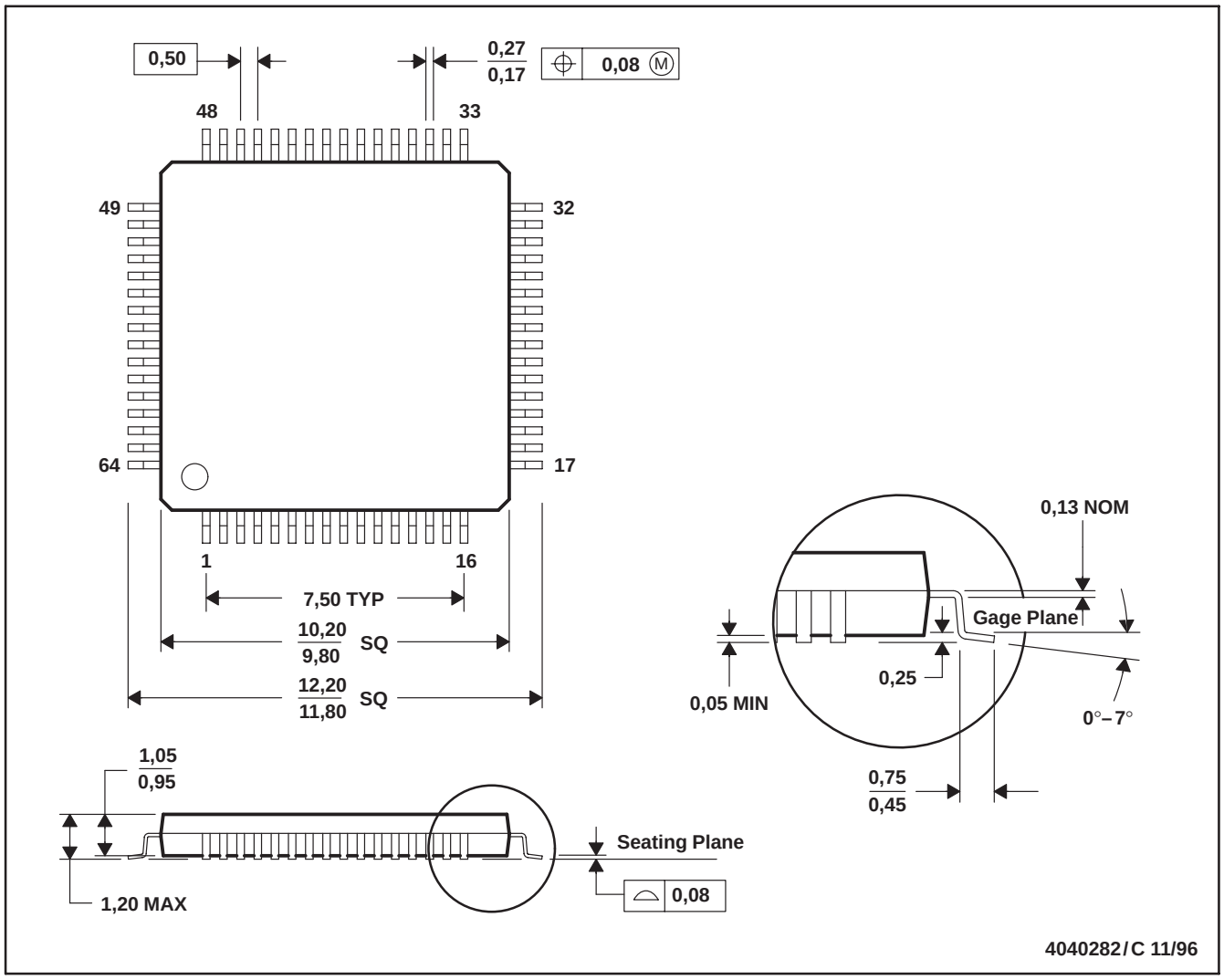

NOTES: A. All linear dimensions are in millimeters.
B. This drawing is subject to change without notice.
C. Falls within JEDEC MS-026

PAG (S–PQFP–G64) PLASTIC QUAD FLATPACK

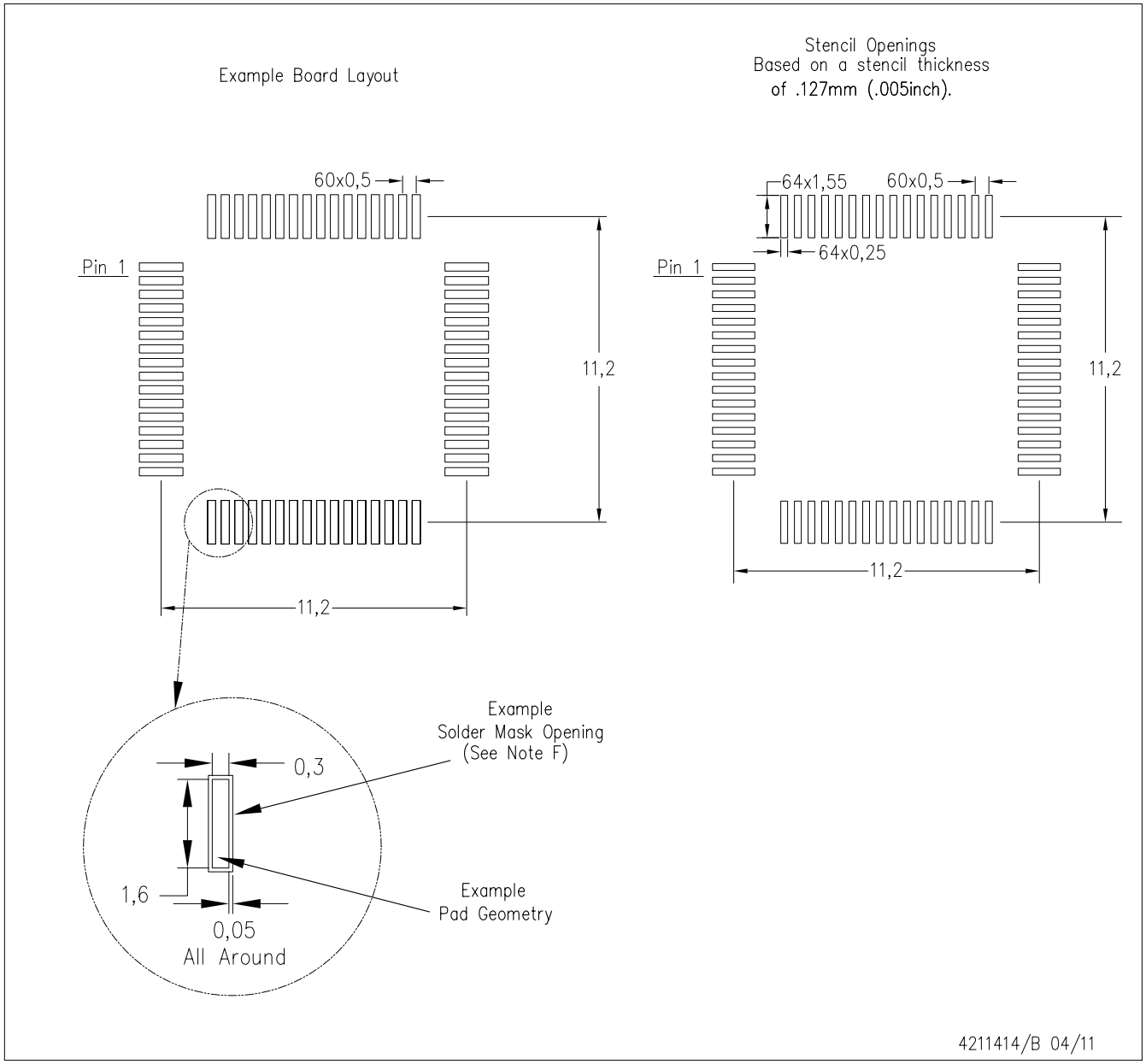

NOTES:
A. All linear dimensions are in millimeters.
B. This drawing is subject to change without notice.
C. Laser cutting apertures with trapezoidal walls and also rounding corners will offer better paste release. Customers should contact their board assembly site for stencil design recommendations. Example stencil design based on a 50% volumetric metal load solder paste. Refer to IPC–7525 for other stencil recommendations.
D. Customers should contact their board fabrication site for solder mask tolerances between and around signal pads.

PAG (S–PQFP–G64) PLASTIC QUAD FLATPACK

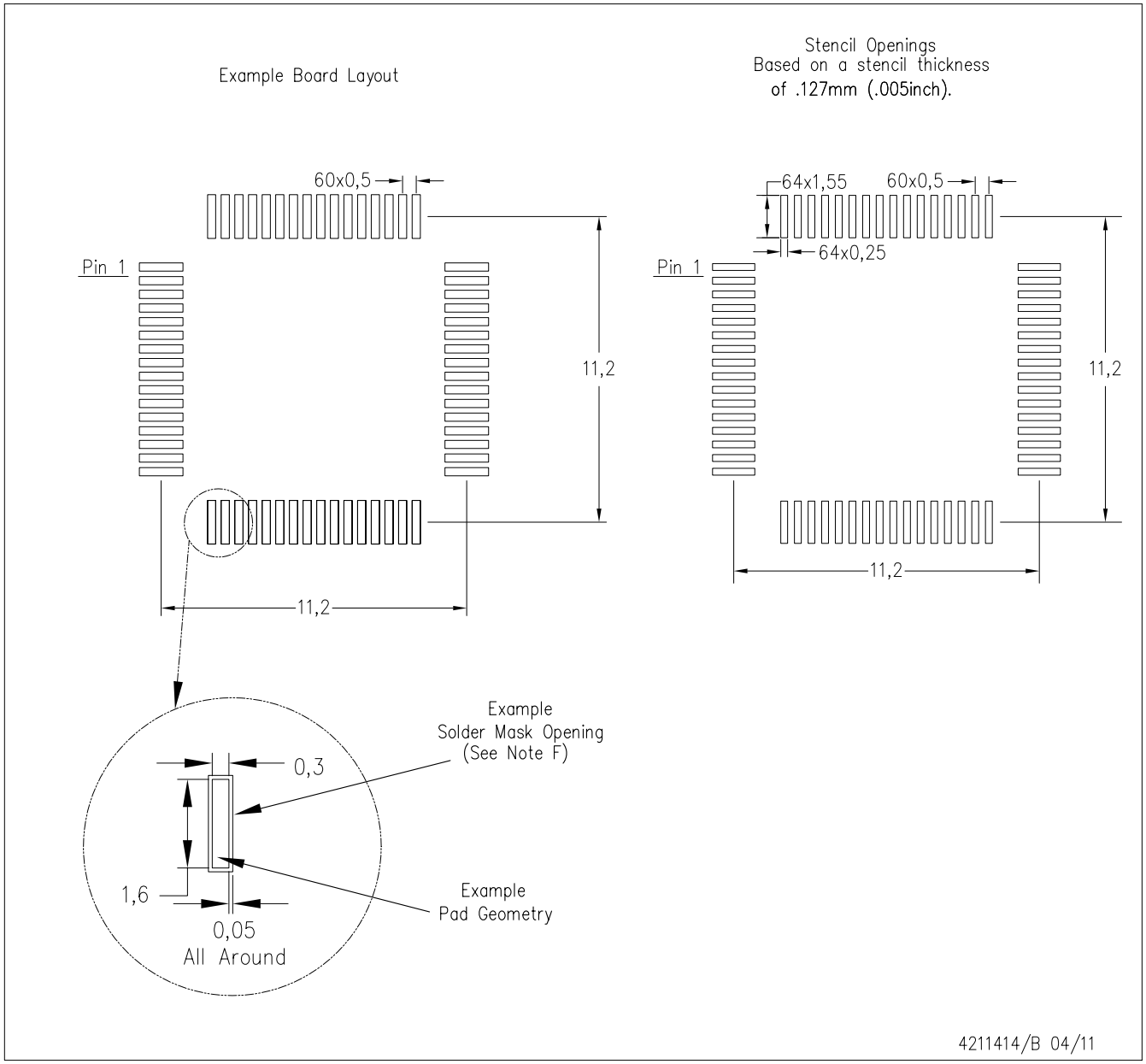

NOTES:
A. All linear dimensions are in millimeters.
B. This drawing is subject to change without notice.
C. Laser cutting apertures with trapezoidal walls and also rounding corners will offer better paste release. Customers should contact their board assembly site for stencil design recommendations. Example stencil design based on a 50% volumetric metal load solder paste. Refer to IPC–7525 for other stencil recommendations.
D. Customers should contact their board fabrication site for solder mask tolerances between and around signal pads.

IMPORTANT NOTICE AND DISCLAIMER

TI PROVIDES TECHNICAL AND RELIABILITY DATA (INCLUDING DATASHEETS), DESIGN RESOURCES (INCLUDING REFERENCE DESIGNS), APPLICATION OR OTHER DESIGN ADVICE, WEB TOOLS, SAFETY INFORMATION, AND OTHER RESOURCES “AS IS” AND WITH ALL FAULTS, AND DISCLAIMS ALL WARRANTIES, EXPRESS AND IMPLIED, INCLUDING WITHOUT LIMITATION ANY IMPLIED WARRANTIES OF MERCHANTABILITY, FITNESS FOR A PARTICULAR PURPOSE OR NON-INFRINGEMENT OF THIRD PARTY INTELLECTUAL PROPERTY RIGHTS.

These resources are intended for skilled developers designing with TI products. You are solely responsible for (1) selecting the appropriate TI products for your application, (2) designing, validating and testing your application, and (3) ensuring your application meets applicable standards, and any other safety, security, regulatory or other requirements.

These resources are subject to change without notice. TI grants you permission to use these resources only for development of an application that uses the TI products described in the resource. Other reproduction and display of these resources is prohibited. No license is granted to any other TI intellectual property right or to any third party intellectual property right. TI disclaims responsibility for, and you fully indemnify TI and its representatives against any claims, damages, costs, losses, and liabilities arising out of your use of these resources.

TI’s products are provided subject to TI’s Terms of Sale, TI’s General Quality Guidelines, or other applicable terms available either on ti.com or provided in conjunction with such TI products. TI’s provision of these resources does not expand or otherwise alter TI’s applicable warranties or warranty disclaimers for TI products. Unless TI explicitly designates a product as custom or customer-specified, TI products are standard, catalog, general purpose devices.

TI objects to and rejects any additional or different terms you may propose.

Copyright © 2026, Texas Instruments Incorporated

Last updated 10/2025