# CC2500
# Low-Cost Low-Power 2.4 GHz RF Transceiver

## Applications

- *2400-2483.5 MHz ISM/SRD band systems*
- *Consumer electronics*
- *Wireless game controllers*
- *Wireless audio*
- *Wireless keyboard and mouse*
- *RF enabled remote controls*

## Product Description

The **CC2500** is a low-cost 2.4 GHz transceiver designed for very low-power wireless applications. The circuit is intended for the 2400-2483.5 MHz ISM (Industrial, Scientific and Medical) and SRD (Short Range Device) frequency band.

The RF transceiver is integrated with a highly configurable baseband modem. The modem supports various modulation formats and has a configurable data rate up to 500 kBaud.

**CC2500** provides extensive hardware support for packet handling, data buffering, burst transmissions, clear channel assessment, link quality indication, and wake-on-radio.

The main operating parameters and the 64-byte transmit/receive FIFOs of **CC2500** can be controlled via an SPI interface. In a typical system, the **CC2500** will be used together with a microcontroller and a few additional passive components.

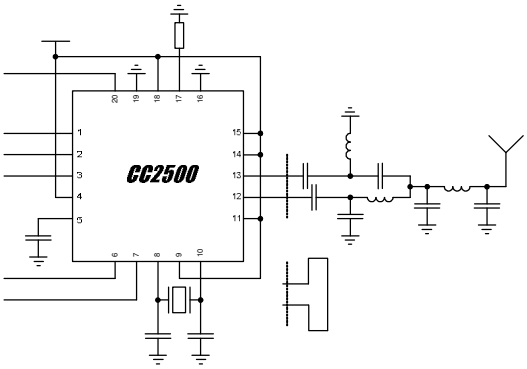


## Key Features

### RF Performance

- High sensitivity (–104 dBm at 2.4 kBaud, 1% packet error rate)
- Low current consumption (13.3 mA in RX, 250 kBaud, input well above sensitivity limit)
- Programmable output power up to +1 dBm
- Excellent receiver selectivity and blocking performance
- Programmable data rate from 1.2 to 500 kBaud
- Frequency range: 2400 – 2483.5 MHz

### Analog Features

- OOK, 2-FSK, GFSK, and MSK supported
- Suitable for frequency hopping and multi-channel systems due to a fast settling frequency synthesizer with 90 us settling time
- Automatic Frequency Compensation (AFC) can be used to align the frequency synthesizer to the received centre frequency
- Integrated analog temperature sensor

### Digital Features

- Flexible support for packet oriented systems: On-chip support for sync word detection, address check, flexible packet length, and automatic CRC handling
- Efficient SPI interface: All registers can be programmed with one “burst” transfer
- Digital RSSI output
- Programmable channel filter bandwidth
- Programmable Carrier Sense (CS) indicator

- Programmable Preamble Quality Indicator (PQI) for improved protection against false sync word detection in random noise
- Support for automatic Clear Channel Assessment (CCA) before transmitting (for listen-before-talk systems)
- Support for per-package Link Quality Indication (LQI)
- Optional automatic whitening and de-whitening of data

## Low-Power Features

- 400 nA SLEEP mode current consumption
- Fast startup time: 240 us from SLEEP to RX or TX mode (measured on EM design)
- Wake-on-radio functionality for automatic low-power RX polling
- Separate 64-byte RX and TX data FIFOs (enables burst mode data transmission)

## General

- Few external components: Complete on-chip frequency synthesizer, no external filters or RF switch needed
- Green package: RoHS compliant and no antimony or bromine
- Small size (QLP 4x4 mm package, 20 pins)
- Suited for systems compliant with EN 300 328 and EN 300 440 class 2 (Europe), FCC CFR47 Part 15 (US), and ARIB STD-T66 (Japan)
- Support for asynchronous and synchronous serial receive/transmit mode for backwards compatibility with existing radio communication protocols

## Abbreviations

Abbreviations used in this data sheet are described below.

| | |
|---|---|
| ACP | Adjacent Channel Power |
| ADC | Analog to Digital Converter |
| AFC | Automatic Frequency Offset Compensation |
| AGC | Automatic Gain Control |
| AMR | Automatic Meter Reading |
| ARIB | Association of Radio Industries and Businesses |
| BER | Bit Error Rate |
| BT | Bandwidth-Time product |
| CCA | Clear Channel Assessment |
| CFR | Code of Federal Regulations |
| CRC | Cyclic Redundancy Check |
| CS | Carrier Sense |
| CW | Continuous Wave (Unmodulated Carrier) |
| DC | Direct Current |
| DVGA | Digital Variable Gain Amplifier |
| ESR | Equivalent Series Resistance |
| FCC | Federal Communications Commission |
| FEC | Forward Error Correction |
| FIFO | First-In-First-Out |
| FHSS | Frequency Hopping Spread Spectrum |
| 2-FSK | Frequency Shift Keying |
| GFSK | Gaussian shaped Frequency Shift Keying |
| IF | Intermediate Frequency |
| I/Q | In-Phase/Quadrature |
| ISM | Industrial, Scientific and Medical |
| LBT | Listen Before Transmit |
| LC | Inductor-Capacitor |
| LNA | Low Noise Amplifier |
| LO | Local Oscillator |
| LQI | Link Quality Indicator |
| LSB | Least Significant Bit |
| MCU | Microcontroller Unit |
| MSB | Most Significant Bit |
| MSK | Minimum Shift Keying |
| NA | Not Applicable |
| NRZ | Non Return to Zero (Coding) |
| OOK | On Off Keying |
| PA | Power Amplifier |
| PCB | Printed Circuit Board |
| PD | Power Down |
| PER | Packet Error Rate |
| PLL | Phase Locked Loop |
| POR | Power-on Reset |
| PQI | Preamble Quality Indicator |
| PQT | Preamble Quality Threshold |
| RCOSC | RC Oscillator |
| QPSK | Quadrature Phase Shift Keying |
| QLP | Quad Leadless Package |
| RC | Resistor-Capacitor |
| RF | Radio Frequency |
| RSSI | Received Signal Strength Indicator |
| RX | Receive, Receive Mode |
| SMD | Surface Mount Device |
| SNR | Signal to Noise Ratio |
| SPI | Serial Peripheral Interface |
| SRD | Short Range Device |
| T/R | Transmit/Receive |
| TX | Transmit, Transmit Mode |
| VCO | Voltage Controlled Oscillator |
| WLAN | Wireless Local Area Networks |
| WOR | Wake on Radio, Low power polling |
| XOSC | Crystal Oscillator |
| XTAL | Crystal |

## Table of Contents

**APPLICATIONS** ..... **1**
**PRODUCT DESCRIPTION** ..... **1**
**KEY FEATURES** ..... **1**
RF PERFORMANCE ..... 1
ANALOG FEATURES ..... 1
DIGITAL FEATURES ..... 1
LOW-POWER FEATURES ..... 2
GENERAL ..... 2
**ABBREVIATIONS** ..... **3**
**TABLE OF CONTENTS** ..... **4**
1 ABSOLUTE MAXIMUM RATINGS ..... 6
2 OPERATING CONDITIONS ..... 6
3 GENERAL CHARACTERISTICS ..... 6
4 ELECTRICAL SPECIFICATIONS ..... 7
4.1 CURRENT CONSUMPTION ..... 7
4.2 RF RECEIVE SECTION ..... 9
4.3 RF TRANSMIT SECTION ..... 11
4.4 CRYSTAL OSCILLATOR ..... 12
4.5 LOW POWER RC OSCILLATOR ..... 12
4.6 FREQUENCY SYNTHESIZER CHARACTERISTICS ..... 13
4.7 ANALOG TEMPERATURE SENSOR ..... 14
4.8 DC CHARACTERISTICS ..... 14
4.9 POWER-ON RESET ..... 14
5 PIN CONFIGURATION ..... 15
6 CIRCUIT DESCRIPTION ..... 17
7 APPLICATION CIRCUIT ..... 17
8 CONFIGURATION OVERVIEW ..... 19
9 CONFIGURATION SOFTWARE ..... 20
10 4-WIRE SERIAL CONFIGURATION AND DATA INTERFACE ..... 21
10.1 CHIP STATUS BYTE ..... 22
10.2 REGISTER ACCESS ..... 23
10.3 SPI READ ..... 23
10.4 COMMAND STROBES ..... 24
10.5 FIFO ACCESS ..... 24
10.6 PATABLE ACCESS ..... 24
11 MICROCONTROLLER INTERFACE AND PIN CONFIGURATION ..... 25
11.1 CONFIGURATION INTERFACE ..... 25
11.2 GENERAL CONTROL AND STATUS PINS ..... 25
11.3 OPTIONAL RADIO CONTROL FEATURE ..... 26
12 DATA RATE PROGRAMMING ..... 26
13 RECEIVER CHANNEL FILTER BANDWIDTH ..... 27
14 DEMODULATOR, SYMBOL SYNCHRONIZER AND DATA DECISION ..... 27
14.1 FREQUENCY OFFSET COMPENSATION ..... 27
14.2 BIT SYNCHRONIZATION ..... 27
14.3 BYTE SYNCHRONIZATION ..... 28
15 PACKET HANDLING HARDWARE SUPPORT ..... 28
15.1 DATA WHITENING ..... 29
15.2 PACKET FORMAT ..... 29
15.3 PACKET FILTERING IN RECEIVE MODE ..... 31
15.4 CRC CHECK ..... 31
15.5 PACKET HANDLING IN TRANSMIT MODE ..... 32
15.6 PACKET HANDLING IN RECEIVE MODE ..... 32
15.7 PACKET HANDLING IN FIRMWARE ..... 33
16 MODULATION FORMATS ..... 33
16.1 FREQUENCY SHIFT KEYING ..... 33
16.2 MINIMUM SHIFT KEYING ..... 33

16.3 AMPLITUDE MODULATION ..... 34
17 RECEIVED SIGNAL QUALIFIERS AND LINK QUALITY INFORMATION ..... 34
17.1 SYNC WORD QUALIFIER ..... 34
17.2 PREAMBLE QUALITY THRESHOLD (PQT) ..... 34
17.3 RSSI ..... 34
17.4 CARRIER SENSE (CS) ..... 35
17.5 CLEAR CHANNEL ASSESSMENT (CCA) ..... 37
17.6 LINK QUALITY INDICATOR (LQI) ..... 37
18 FORWARD ERROR CORRECTION WITH INTERLEAVING ..... 37
18.1 FORWARD ERROR CORRECTION (FEC) ..... 37
18.2 INTERLEAVING ..... 37
19 RADIO CONTROL ..... 39
19.1 POWER-ON START-UP SEQUENCE ..... 39
19.2 CRYSTAL CONTROL ..... 40
19.3 VOLTAGE REGULATOR CONTROL ..... 40
19.4 ACTIVE MODES ..... 41
19.5 WAKE ON RADIO (WOR) ..... 41
19.6 TIMING ..... 42
19.7 RX TERMINATION TIMER ..... 43
20 DATA FIFO ..... 43
21 FREQUENCY PROGRAMMING ..... 44
22 VCO ..... 45
22.1 VCO AND PLL SELF-CALIBRATION ..... 45
23 VOLTAGE REGULATORS ..... 46
24 OUTPUT POWER PROGRAMMING ..... 46
25 SELECTIVITY ..... 48
26 CRYSTAL OSCILLATOR ..... 50
26.1 REFERENCE SIGNAL ..... 50
27 EXTERNAL RF MATCH ..... 50
28 PCB LAYOUT RECOMMENDATIONS ..... 51
29 GENERAL PURPOSE / TEST OUTPUT CONTROL PINS ..... 52
30 ASYNCHRONOUS AND SYNCHRONOUS SERIAL OPERATION ..... 54
30.1 ASYNCHRONOUS OPERATION ..... 54
30.2 SYNCHRONOUS SERIAL OPERATION ..... 54
31 SYSTEM CONSIDERATIONS AND GUIDELINES ..... 54
31.1 SRD REGULATIONS ..... 54
31.2 FREQUENCY HOPPING AND MULTI-CHANNEL SYSTEMS ..... 55
31.3 WIDEBAND MODULATION NOT USING SPREAD SPECTRUM ..... 55
31.4 DATA BURST TRANSMISSIONS ..... 55
31.5 CONTINUOUS TRANSMISSIONS ..... 55
31.6 CRYSTAL DRIFT COMPENSATION ..... 56
31.7 SPECTRUM EFFICIENT MODULATION ..... 56
31.8 LOW COST SYSTEMS ..... 56
31.9 BATTERY OPERATED SYSTEMS ..... 56
31.10 INCREASING OUTPUT POWER ..... 56
32 CONFIGURATION REGISTERS ..... 57
32.1 CONFIGURATION REGISTER DETAILS – REGISTERS WITH PRESERVED VALUES IN SLEEP STATE ..... 61
32.2 CONFIGURATION REGISTER DETAILS – REGISTERS THAT LOSE PROGRAMMING IN SLEEP STATE ..... 80
32.3 STATUS REGISTER DETAILS ..... 81
33 PACKAGE DESCRIPTION (QFN 20) ..... 85
33.1 RECOMMENDED PCB LAYOUT FOR PACKAGE (QFN 20) ..... 85
33.2 SOLDERING INFORMATION ..... 85
34 ORDERING INFORMATION ..... 86
35 REFERENCES ..... 86
36 GENERAL INFORMATION ..... 88
36.1 DOCUMENT HISTORY ..... 88

# 1 Absolute Maximum Ratings

Under no circumstances must the absolute maximum ratings given in Table 1 be violated. Stress exceeding one or more of the limiting values may cause permanent damage to the device.

***Caution!*** *ESD sensitive device. Precaution should be used when handling the device in order to prevent permanent damage.*

| Parameter | Min | Max | Unit | Condition/Note |
|---|---|---|---|---|
| Supply voltage | –0.3 | 3.9 | V | All supply pins must have the same voltage |
| Voltage on any digital pin | –0.3 | VDD+0.3, max 3.9 | V | |
| Voltage on the pins RF_P, RF_N and DCOUPL | –0.3 | 2.0 | V | |
| Voltage ramp-up rate | | 120 | kV/µs | |
| Input RF level | | +10 | dBm | |
| Storage temperature range | –50 | 150 | °C | |
| Solder reflow temperature | | 260 | °C | According to IPC/JEDEC J-STD-020D |
| ESD | | <500 | V | According to JEDEC STD 22, method A114, Human Body Model |

**Table 1: Absolute Maximum Ratings**

# 2 Operating Conditions

The ***CC2500*** operating conditions are listed in Table 2 below.

| Parameter | Min | Max | Unit | Condition/Note |
|---|---|---|---|---|
| Operating temperature | –40 | 85 | °C | |
| Operating supply voltage | 1.8 | 3.6 | V | All supply pins must have the same voltage |

**Table 2: Operating Conditions**

# 3 General Characteristics

| Parameter | Min | Typ | Max | Unit | Condition/Note |
|---|---|---|---|---|---|
| Frequency range | 2400 | | 2483.5 | MHz | There will be spurious signals at n/2·crystal oscillator frequency (n is an integer number). RF frequencies at n/2·crystal oscillator frequency should therefore be avoided (e.g. 2405, 2418, 2431, 2444, 2457, 2470 and 2483 MHz when using a 26 MHz crystal). |
| Data rate | 1.2 | | 500 | kBaud | 2-FSK |
| | 1.2 | | 250 | kBaud | GFSK and OOK |
| | 26 | | 500 | kBaud | (Shaped) MSK (also known as differential offset QPSK)<br>Optional Manchester encoding (the data rate in kbps will be half the baud rate). |

**Table 3: General Characteristics**

# 4 Electrical Specifications

## 4.1 Current Consumption

Tc = 25°C, VDD = 3.0 V if nothing else stated. All measurement results obtained using the CC2500EM reference design ([4]).

| Parameter | Min | Typ | Max | Unit | Condition/Note |
|---|---|---|---|---|---|
| Current consumption in power down modes | | 400 | | nA | Voltage regulator to digital part off, register values retained (SLEEP state). All GDO pins programmed to 0x2F (HW to 0) |
| | | 900 | | nA | Voltage regulator to digital part off, register values retained, low-power RC oscillator running (SLEEP state with WOR enabled) |
| | | 92 | | µA | Voltage regulator to digital part off, register values retained, XOSC running (SLEEP state with MCSM0.OSC_FORCE_ON set) |
| | | 160 | | µA | Voltage regulator to digital part on, all other modules in power down (XOFF state) |
| Current consumption | | 8.1 | | µA | Automatic RX polling once each second, using low-power RC oscillator, with 460 kHz filter bandwidth and 250 kBaud data rate, PLL calibration every 4th wakeup. Average current with signal in channel below carrier sense level (MCSM2.RX_TIME_RSSI=1). |
| | | 35 | | µA | Same as above, but with signal in channel *above* carrier sense level, 1.95 ms RX timeout, and no preamble/sync word found. |
| | | 1.4 | | µA | Automatic RX polling every 15th second, using low-power RC oscillator, with 460 kHz filter bandwidth and 250 kBaud data rate, PLL calibration every 4th wakeup. Average current with signal in channel below carrier sense level (MCSM2.RX_TIME_RSSI=1). |
| | | 34 | | µA | Same as above, but with signal in channel *above* carrier sense level, 29.3 ms RX timeout, and no preamble/sync word found. |
| | | 1.5 | | mA | Only voltage regulator to digital part and crystal oscillator running (IDLE state) |
| | | 7.4 | | mA | Only the frequency synthesizer is running (FSTXON state). This current consumption is also representative for the other intermediate states when going from IDLE to RX or TX, including the calibration state. |
| Current consumption, RX states | | 17.0 | | mA | Receive mode, 2.4 kBaud, input at sensitivity limit, MDMCFG2.DEM_DCFILT_OFF=0 |
| | | 14.5 | | mA | Receive mode, 2.4 kBaud, input well above sensitivity limit, MDMCFG2.DEM_DCFILT_OFF=0 |
| | | 17.3 | | mA | Receive mode, 10 kBaud, input at sensitivity limit, MDMCFG2.DEM_DCFILT_OFF=0 |
| | | 14.9 | | mA | Receive mode, 10 kBaud, input well above sensitivity limit, MDMCFG2.DEM_DCFILT_OFF=0 |
| | | 18.8 | | mA | Receive mode, 250 kBaud, input at sensitivity limit, MDMCFG2.DEM_DCFILT_OFF=0 |
| | | 15.7 | | mA | Receive mode, 250 kBaud, input well above sensitivity limit, MDMCFG2.DEM_DCFILT_OFF=0 |
| | | 16.6 | | mA | Receive mode, 250 kBaud current optimized, input at sensitivity limit, MDMCFG2.DEM_DCFILT_OFF=1 |
| | | 13.3 | | mA | Receive mode, 250 kBaud current optimized, input well above sensitivity limit, MDMCFG2.DEM_DCFILT_OFF=1 |
| | | 19.6 | | mA | Receive mode, 500 kBaud, input at sensitivity limit, MDMCFG2.DEM_DCFILT_OFF=0 |
| | | 17.0 | | mA | Receive mode, 500 kBaud, input well above sensitivity limit, MDMCFG2.DEM_DCFILT_OFF=0 |

| | | | | | |
|---|---|---|---|---|---|
| Current consumption, TX states | | 11.1 | | mA | Transmit mode, –12 dBm output power |
| | | 15.0 | | mA | Transmit mode, -6 dBm output power |
| | | 21.2 | | mA | Transmit mode, 0 dBm output power |
| | | 21.5 | | mA | Transmit mode, +1 dBm output power |

**Table 4: Current Consumption**

## 4.2 RF Receive Section

Tc = 25°C, VDD = 3.0 V if nothing else stated. All measurement results obtained using the CC2500EM reference design ([4]).

| Parameter | Min | Typ | Max | Unit | Condition/Note |
|---|---|---|---|---|---|
| Digital channel filter bandwidth | 58 | | 812 | kHz | User programmable. The bandwidth limits are proportional to crystal frequency (given values assume a 26.0 MHz crystal). |
| **2.4 kBaud data rate, sensitivity optimized,** `MDMCFG2.DEM_DCFILT_OFF=0`<br>(2-FSK, 1% packet error rate, 20 bytes packet length, 203 kHz digital channel filter bandwidth) | | | | | |
| Receiver sensitivity | | –104 | | dBm | The RX current consumption can be reduced by approximately 1.7 mA by setting `MDMCFG2.DEM_DCFILT_OFF=1`. The typical sensitivity is then -102 dBm and the temperature range is from 0°C to +85°C.<br><br>The sensitivity can be improved to typically –106 dBm with `MDMCFG2.DEM_DCFILT_OFF=0` by programming registers `TEST2` and `TEST1` (see page 82). The temperature range is then from 0°C to +85°C. |
| Saturation | | –13 | | dBm | |
| Adjacent channel rejection | | 23 | | dB | Desired channel 3 dB above the sensitivity limit. 250 kHz channel spacing |
| Alternate channel rejection | | 31 | | dB | Desired channel 3 dB above the sensitivity limit. 250 kHz channel spacing |
| | | | | | See Figure 22 for plot of selectivity versus frequency offset |
| Blocking<br>±10 MHz offset<br>±20 MHz offset<br>±50 MHz offset | | <br>64<br>70<br>71 | | <br>dBm<br>dBm<br>dBm | Wanted signal 3 dB above sensitivity level.<br>Compliant with ETSI EN 300 440 class 2 receiver requirements. |
| **10 kBaud data rate, sensitivity optimized,** `MDMCFG2.DEM_DCFILT_OFF=0`<br>(2-FSK, 1% packet error rate, 20 bytes packet length, 232 kHz digital channel filter bandwidth) | | | | | |
| Receiver sensitivity | | –99 | | dBm | The RX current consumption can be reduced by approximately 1.7 mA by setting `MDMCFG2.DEM_DCFILT_OFF=1`. The typical sensitivity is then -97 dBm<br><br>The sensitivity can be improved to typically –101 dBm with `MDMCFG2.DEM_DCFILT_OFF=0` by programming registers `TEST2` and `TEST1` (see page 82). The temperature range is then from 0°C to +85°C. |
| Saturation | | –9 | | dBm | |
| Adjacent channel rejection | | 18 | | dB | Desired channel 3 dB above the sensitivity limit. 250 kHz channel spacing |
| Alternate channel rejection | | 25 | | dB | Desired channel 3 dB above the sensitivity limit. 250 kHz channel spacing |
| | | | | | See Figure 23 for plot of selectivity versus frequency offset |
| Blocking<br>±10 MHz offset<br>±20 MHz offset<br>±50 MHz offset | | <br>59<br>65<br>66 | | <br>dB<br>dB<br>dB | Wanted signal 3 dB above sensitivity level.<br>Compliant with ETSI EN 300 440 class 2 receiver requirements. |

| Parameter | Min | Typ | Max | Unit | Condition/Note |
|---|---|---|---|---|---|
| **250 kBaud data rate, sensitivity optimized,** `MDMCFG2.DEM_DCFILT_OFF`=0<br>(MSK, 1% packet error rate, 20 bytes packet length, 540 kHz digital channel filter bandwidth) | | | | | |
| Receiver sensitivity | | –89 | | dBm | |
| Saturation | | –13 | | dBm | |
| Adjacent channel rejection | | 21 | | dB | Desired channel 3 dB above the sensitivity limit. 750 kHz channel spacing |
| Alternate channel rejection | | 30 | | dB | Desired channel 3 dB above the sensitivity limit. 750 kHz channel spacing |
| | | | | | See Figure 24 for plot of selectivity versus frequency offset |
| Blocking<br>±10 MHz offset<br>±20 MHz offset<br>±50 MHz offset | | <br>46<br>53<br>55 | | <br>dB<br>dB<br>dB | Wanted signal 3 dB above sensitivity level.<br>Compliant with ETSI EN 300 440 class 2 receiver requirements. |
| **250 kBaud data rate, current optimized,** `MDMCFG2.DEM_DCFILT_OFF=1`<br>(MSK, 1% packet error rate, 20 bytes packet length, 540 kHz digital channel filter bandwidth) | | | | | |
| Receiver sensitivity | | –87 | | dBm | |
| Saturation | | –12 | | dBm | |
| Adjacent channel rejection | | 21 | | dB | Desired channel 3 dB above the sensitivity limit. 750 kHz channel spacing |
| Alternate channel rejection | | 30 | | dB | Desired channel 3 dB above the sensitivity limit. 750 kHz channel spacing |
| | | | | | See Figure 25 for plot of selectivity versus frequency offset |
| Blocking<br>±10 MHz offset<br>±20 MHz offset<br>±50 MHz offset | | <br>46<br>52<br>55 | | <br>dB<br>dB<br>dB | Wanted signal 3 dB above sensitivity level.<br>Compliant with ETSI EN 300 440 class 2 receiver requirements. |
| **500 kBaud data rate,** `MDMCFG2.DEM_DCFILT_OFF=0` (`MDMCFG2.DEM_DCFILT_OFF=1` cannot be used for data rates >250 kBaud)<br>(MSK, 1% packet error rate, 20 bytes packet length, 812 kHz digital channel filter bandwidth) | | | | | |
| Receiver sensitivity | | –83 | | dBm | |
| Saturation | | –18 | | dBm | |
| Adjacent channel rejection | | 14 | | dB | Desired channel 3 dB above the sensitivity limit. 1 MHz channel spacing |
| Alternate channel rejection | | 25 | | dB | Desired channel 3 dB above the sensitivity limit. 1 MHz channel spacing |
| | | | | | See Figure 26 for plot of selectivity versus frequency offset |
| Blocking<br>±10 MHz offset<br>±20 MHz offset<br>±50 MHz offset | | <br>40<br>48<br>50 | | <br>dB<br>dB<br>dB | Wanted signal 3 dB above sensitivity level.<br>Compliant with ETSI EN 300 440 class 2 receiver requirements. |
| **General** | | | | | |
| Spurious emissions<br>25 MHz – 1 GHz<br>Above 1 GHz | | | <br>–57<br>–47 | <br>dBm<br>dBm | |
| RX latency | | 9 | | bit | Serial operation. Time from start of reception until data is available on the receiver data output pin is equal to 9 bit. |

**Table 5: RF Receive Section**

## 4.3 RF Transmit Section

Tc = 25°C, VDD = 3.0 V, 0 dBm if nothing else stated. All measurement results obtained using the CC2500EM reference design ([4]).

| Parameter | Min | Typ | Max | Unit | Condition/Note |
|---|---|---|---|---|---|
| Differential load impedance | | 80 + j74 | | Ω | Differential impedance as seen from the RF-port (RF_P and RF_N) towards the antenna. Follow the CC2500EM reference design ([4]) available from the TI website. |
| Output power, highest setting | | +1 | | dBm | Output power is programmable and full range is available across the entire frequency band.<br>Delivered to a 50 Ω single-ended load via CC2500EM reference design ([4]) RF matching network. |
| Output power, lowest setting | | –30 | | dBm | Output power is programmable and full range is available across the entire frequency band.<br>Delivered to a 50 Ω single-ended load via CC2500EM reference design ([4]) RF matching network.<br>It is possible to program less than -30 dBm output power, but this is not recommended due to large variation in output power across operating conditions and processing corners for these settings. |
| Occupied bandwidth (99%) | | 91 | | kHz | 2.4 kBaud, 38.2 kHz deviation, 2-FSK |
| | | 117 | | kHz | 10 kBaud, 38.2 kHz deviation, 2-FSK |
| | | 296 | | kHz | 250 kBaud, MSK |
| | | 489 | | kHz | 500 kBaud, MSK |
| Adjacent channel power (ACP) | | -28 | | dBc | 2.4 kBaud, 38.2 kHz deviation, 2-FSK, 250 kHz channel spacing |
| | | -27 | | dBc | 10 kBaud, 38.2 kHz deviation, 2-FSK, 250 kHz channel spacing |
| | | -22 | | dBc | 250 kBaud, MSK, 750 kHz channel spacing |
| | | -21 | | dBc | 500 kBaud, MSK, 1 MHz channel spacing |
| Spurious emissions | | | | | |
| 25 MHz – 1 GHz | | | –36 | dBm | |
| 47-74, 87.5-118, 174-230, 470-862 MHz | | | –54 | dBm | |
| 1800-1900 MHz | | | –47 | dBm | Restricted band in Europe |
| At 2·RF and 3·RF | | | –41 | dBm | Restricted bands in USA |
| Otherwise above 1 GHz | | | –30 | dBm | |
| TX latency | | 8 | | bit | Serial operation. Time from sampling the data on the transmitter data input pin until it is observed on the RF output ports. |

**Table 6: RF Transmit Section**

## 4.4 Crystal Oscillator

Tc = 25°C, VDD = 3.0 V if nothing else stated.

| Parameter | Min | Typ | Max | Unit | Condition/Note |
|---|---|---|---|---|---|
| Crystal frequency | 26 | 26 | 27 | MHz | |
| Tolerance | | ±40 | | ppm | This is the total tolerance including a) initial tolerance, b) crystal loading, c) aging, and d) temperature dependence.<br>The acceptable crystal tolerance depends on RF frequency and channel spacing / bandwidth. |
| ESR | | | 100 | Ω | |
| Start-up time | | 150 | | µs | Measured on CC2500EM reference design ([4]) using crystal AT-41CD2 from NDK.<br>This parameter is to a large degree crystal dependent. |

**Table 7: Crystal Oscillator Parameters**

## 4.5 Low Power RC Oscillator

Tc = 25°C, VDD = 3.0 V if nothing else stated. All measurement results obtained using the CC2500EM reference design ([4]).

| Parameter | Min | Typ | Max | Unit | Condition/Note |
|---|---|---|---|---|---|
| Calibrated frequency | 34.7 | 34.7 | 36 | kHz | Calibrated RC oscillator frequency is XTAL frequency divided by 750 |
| Frequency accuracy after calibration | | | -1 / +10 | % | The RC oscillator contains an error in the calibration routine that statistically occurs in 17.3% of all calibrations performed. The given maximum accuracy figures account for the calibration error. Refer also to the CC2500 Errata Notes. |
| Temperature coefficient | | +0.4 | | % / °C | Frequency drift when temperature changes after calibration |
| Supply voltage coefficient | | +3 | | % / V | Frequency drift when supply voltage changes after calibration |
| Initial calibration time | | 2 | | ms | When the RC oscillator is enabled, calibration is continuously done in the background as long as the crystal oscillator is running. |

**Table 8: RC Oscillator Parameters**

## 4.6 Frequency Synthesizer Characteristics

Tc = 25°C, VDD = 3.0 V if nothing else stated. All measurement results obtained using the CC2500EM reference design ([4]). Min figures are given using a 27 MHz crystal. Typ and max figures are given using a 26 MHz crystal.

| Parameter | Min | Typ | Max | Unit | Condition/Note |
|---|---|---|---|---|---|
| Programmed frequency resolution | 397 | $F_{XOSC}/2^{16}$ | 412 | Hz | 26-27 MHz crystal. |
| Synthesizer frequency tolerance | | ±40 | | ppm | Given by crystal used. Required accuracy (including temperature and aging) depends on frequency band and channel bandwidth / spacing. |
| RF carrier phase noise | | –78 | | dBc/Hz | @ 50 kHz offset from carrier |
| | | –78 | | dBc/Hz | @ 100 kHz offset from carrier |
| | | –81 | | dBc/Hz | @ 200 kHz offset from carrier |
| | | –90 | | dBc/Hz | @ 500 kHz offset from carrier |
| | | –100 | | dBc/Hz | @ 1 MHz offset from carrier |
| | | –108 | | dBc/Hz | @ 2 MHz offset from carrier |
| | | –114 | | dBc/Hz | @ 5 MHz offset from carrier |
| | | –118 | | dBc/Hz | @ 10 MHz offset from carrier |
| PLL turn-on / hop time | 85.1 | 88.4 | 88.4 | µs | Time from leaving the IDLE state until arriving in the RX, FSTXON or TX state, when not performing calibration. Crystal oscillator running. |
| PLL RX/TX settling time | 9.3 | 9.6 | 9.6 | µs | Settling time for the 1·IF frequency step from RX to TX |
| PLL TX/RX settling time | 20.7 | 21.5 | 21.5 | µs | Settling time for the 1·IF frequency step from TX to RX |
| PLL calibration time | 694 | 721 | 721 | µs | Calibration can be initiated manually or automatically before entering or after leaving RX/TX. |

**Table 9: Frequency Synthesizer Parameters**

## 4.7 Analog Temperature Sensor

The characteristics of the analog temperature sensor at 3.0 V supply voltage are listed in Table 10 below. Note that it is necessary to write 0xBF to the `PTEST` register to use the analog temperature sensor in the IDLE state.

| Parameter | Min | Typ | Max | Unit | Condition/Note |
|---|---|---|---|---|---|
| Output voltage at –40°C | | 0.654 | | V | |
| Output voltage at 0°C | | 0.750 | | V | |
| Output voltage at +40°C | | 0.848 | | V | |
| Output voltage at +80°C | | 0.946 | | V | |
| Temperature coefficient | | 2.43 | | mV/°C | Fitted from –20°C to +80°C |
| Error in calculated temperature, calibrated | -2 * | 0 | 2 * | °C | From –20°C to +80°C when using 2.43 mV / °C, after 1-point calibration at room temperature<br>* The indicated minimum and maximum error with 1-point calibration is based on measured values for typical process parameters |
| Current consumption increase when enabled | | 0.3 | | mA | |

**Table 10: Analog Temperature Sensor Parameters**

## 4.8 DC Characteristics

Tc = 25°C if nothing else stated.

| Digital Inputs/Outputs | Min | Max | Unit | Condition/Note |
|---|---|---|---|---|
| Logic "0" input voltage | 0 | 0.7 | V | |
| Logic "1" input voltage | VDD-0.7 | VDD | V | |
| Logic "0" output voltage | 0 | 0.5 | V | For up to 4 mA output current |
| Logic "1" output voltage | VDD-0.3 | VDD | V | For up to 4 mA output current |
| Logic "0" input current | N/A | –50 | nA | Input equals 0 V |
| Logic "1" input current | N/A | 50 | nA | Input equals VDD |

**Table 11: DC Characteristics**

## 4.9 Power-On Reset

When the power supply complies with the requirements in Table 12 below, proper Power-On-Reset functionality is guaranteed. Otherwise, the chip should be assumed to have unknown state until transmitting an `SRES` strobe over the SPI interface. See Section 19.1 on page 39 for further details.

| Parameter | Min | Typ | Max | Unit | Condition/Note |
|---|---|---|---|---|---|
| Power ramp-up time | | | 5 | ms | From 0 V until reaching 1.8 V |
| Power off time | 1 | | | ms | Minimum time between power-on and power-off |

**Table 12: Power-on Reset Requirements**

# 5 Pin Configuration

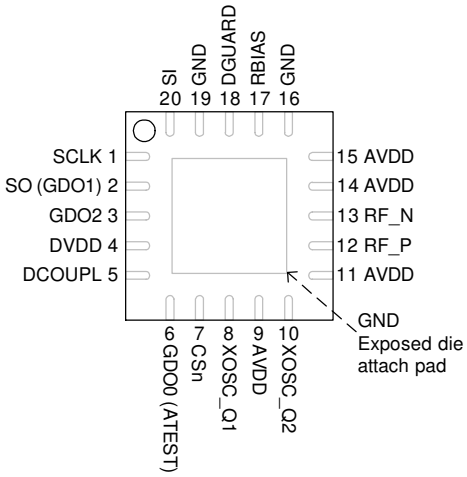


**Figure 1: Pinout Top View**

Note: The exposed die attach pad **must** be connected to a solid ground plane as this is the main ground connection for the chip.

| Pin # | Pin Name | Pin Type | Description |
|---|---|---|---|
| 1 | SCLK | Digital Input | Serial configuration interface, clock input |
| 2 | SO (GDO1) | Digital Output | Serial configuration interface, data output.<br>Optional general output pin when CSn is high |
| 3 | GDO2 | Digital Output | Digital output pin for general use:<br>• Test signals<br>• FIFO status signals<br>• Clear Channel Indicator<br>• Clock output, down-divided from XOSC<br>• Serial output RX data |
| 4 | DVDD | Power (Digital) | 1.8 - 3.6 V digital power supply for digital I/O's and for the digital core voltage regulator |
| 5 | DCOUPL | Power (Digital) | 1.6 - 2.0 V digital power supply output for decoupling.<br>NOTE: This pin is intended for use with the CC2500 only. It can not be used to provide supply voltage to other devices. |
| 6 | GDO0<br>(ATEST) | Digital I/O | Digital output pin for general use:<br>• Test signals<br>• FIFO status signals<br>• Clear Channel Indicator<br>• Clock output, down-divided from XOSC<br>• Serial output RX data<br>• Serial input TX data<br>Also used as analog test I/O for prototype/production testing |
| 7 | CSn | Digital Input | Serial configuration interface, chip select |
| 8 | XOSC_Q1 | Analog I/O | Crystal oscillator pin 1, or external clock input |
| 9 | AVDD | Power (Analog) | 1.8 - 3.6 V analog power supply connection |
| 10 | XOSC_Q2 | Analog I/O | Crystal oscillator pin 2 |
| 11 | AVDD | Power (Analog) | 1.8 - 3.6 V analog power supply connection |
| 12 | RF_P | RF I/O | Positive RF input signal to LNA in receive mode<br>Positive RF output signal from PA in transmit mode |
| 13 | RF_N | RF I/O | Negative RF input signal to LNA in receive mode<br>Negative RF output signal from PA in transmit mode |
| 14 | AVDD | Power (Analog) | 1.8 - 3.6 V analog power supply connection |
| 15 | AVDD | Power (Analog) | 1.8 - 3.6 V analog power supply connection |
| 16 | GND | Ground (Analog) | Analog ground connection |
| 17 | RBIAS | Analog I/O | External bias resistor for reference current |
| 18 | DGUARD | Power (Digital) | Power supply connection for digital noise isolation |
| 19 | GND | Ground (Digital) | Ground connection for digital noise isolation |
| 20 | SI | Digital Input | Serial configuration interface, data input |

**Table 13: Pinout Overview**

# 6 Circuit Description

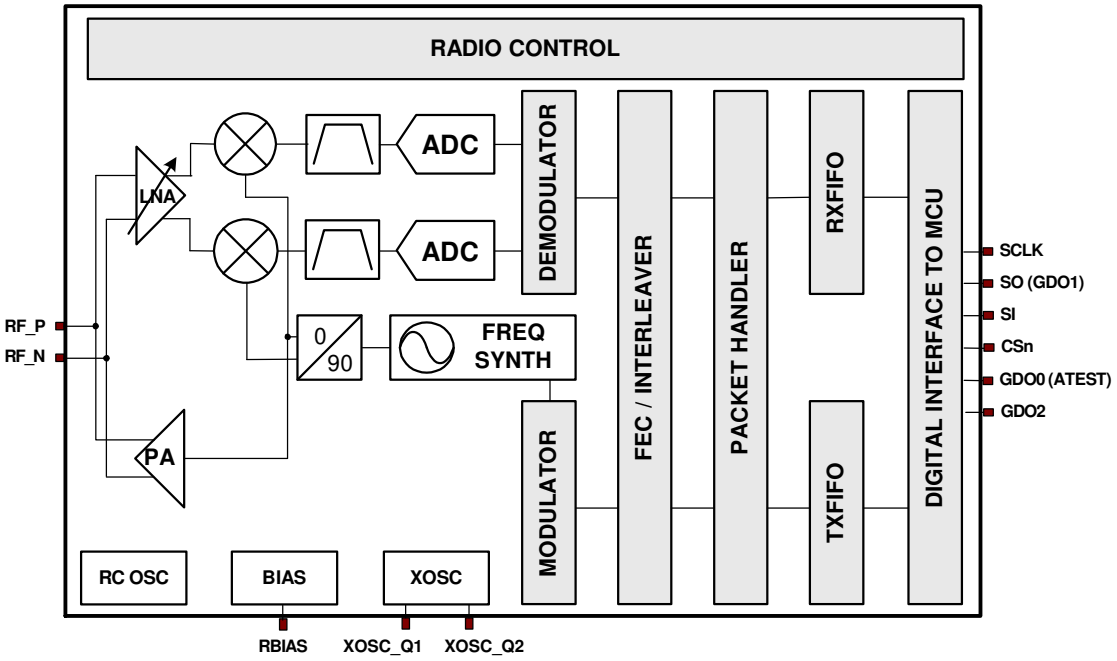


**Figure 2: CC2500 Simplified Block Diagram**

A simplified block diagram of CC2500 is shown in Figure 2.

CC2500 features a low-IF receiver. The received RF signal is amplified by the low-noise amplifier (LNA) and down-converted in quadrature (I and Q) to the intermediate frequency (IF). At IF, the I/Q signals are digitised by the ADCs. Automatic gain control (AGC), fine channel filtering, demodulation bit/packet synchronization are performed digitally.

The transmitter part of CC2500 is based on direct synthesis of the RF frequency.

The frequency synthesizer includes a completely on-chip LC VCO and a 90 degrees phase shifter for generating the I and Q LO signals to the down-conversion mixers in receive mode.

A crystal is to be connected to `XOSC_Q1` and `XOSC_Q2`. The crystal oscillator generates the reference frequency for the synthesizer, as well as clocks for the ADC and the digital part.

A 4-wire SPI serial interface is used for configuration and data buffer access.

The digital baseband includes support for channel configuration, packet handling, and data buffering.

# 7 Application Circuit

Only a few external components are required for using the CC2500. The recommended application circuit is shown in Figure 3. The external components are described in Table 14, and typical values are given in Table 15.

**Bias Resistor**

The bias resistor R171 is used to set an accurate bias current.

**Balun and RF Matching**

The components between the `RF_N`/`RF_P` pins and the point where the two signals are joined together (C122, C132, L121, and L131) form a

balun that converts the differential RF signal on CC2500 to a single-ended RF signal. C121 and C131 are needed for DC blocking. Together with an appropriate LC network, the balun components also transform the impedance to match a 50 Ω antenna (or cable). Suggested values are listed in Table 15.

The balun and LC filter component values and their placement are important to keep the performance optimized. It is highly recommended to follow the CC2500EM reference design ([4]).

**Crystal**

The crystal oscillator uses an external crystal with two loading capacitors (C81 and C101). See Section 26 on page 50 for details.

**Power Supply Decoupling**

The power supply must be properly decoupled close to the supply pins. Note that decoupling capacitors are not shown in the application circuit. The placement and the size of the decoupling capacitors are very important to achieve the optimum performance. The CC2500EM reference design ([4]) should be followed closely.

| Component | Description |
|---|---|
| C51 | Decoupling capacitor for on-chip voltage regulator to digital part |
| C81/C101 | Crystal loading capacitors, see Section 26 on page 50 for details |
| C121/C131 | RF balun DC blocking capacitors |
| C122/C132 | RF balun/matching capacitors |
| C123/C124 | RF LC filter/matching capacitors |
| L121/L131 | RF balun/matching inductors (inexpensive multi-layer type) |
| L122 | RF LC filter inductor (inexpensive multi-layer type) |
| R171 | Resistor for internal bias current reference |
| XTAL | 26-27 MHz crystal, see Section 26 on page 50 for details |

**Table 14: Overview of External Components (excluding supply decoupling capacitors)**

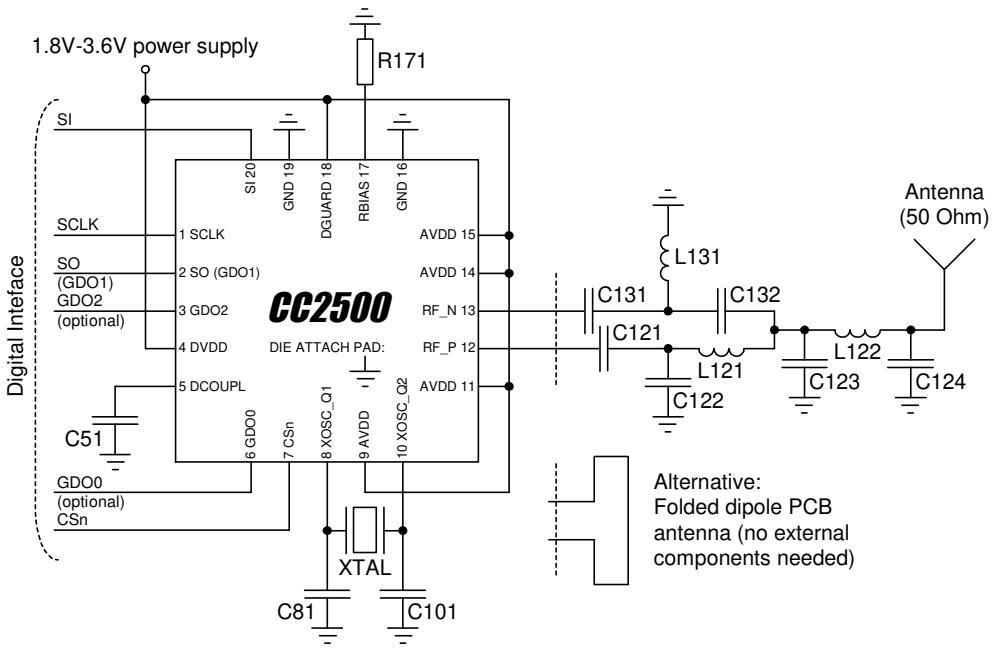


**Figure 3: Typical Application and Evaluation Circuit (excluding supply decoupling capacitors)**

| Component | Value | Manufacturer |
|---|---|---|
| C51 | 100 nF ±10%, 0402 X5R | Murata GRM15 series |
| C81 | 27 pF ±5%, 0402 NP0 | Murata GRM15 series |
| C101 | 27 pF ±5%, 0402 NP0 | Murata GRM15 series |
| C121 | 100 pF ±5%, 0402 NP0 | Murata GRM15 series |
| C122 | 1.0 pF ±0.25 pF, 0402 NP0 | Murata GRM15 series |
| C123 | 1.8 pF ±0.25 pF, 0402 NP0 | Murata GRM15 series |
| C124 | 1.5 pF ±0.25 pF, 0402 NP0 | Murata GRM15 series |
| C131 | 100 pF ±5%, 0402 NP0 | Murata GRM15 series |
| C132 | 1.0 pF ±0.25 pF, 0402 NP0 | Murata GRM15 series |
| L121 | 1.2 nH ±0.3 nH, 0402 monolithic | Murata LQG15HS series |
| L122 | 1.2 nH ±0.3 nH, 0402 monolithic | Murata LQG15HS series |
| L131 | 1.2 nH ±0.3 nH, 0402 monolithic | Murata LQG15HS series |
| R171 | 56 kΩ ±1%, 0402 | Koa RK73 series |
| XTAL | 26.0 MHz surface mount crystal | NDK, AT-41CD2 |

**Table 15: Bill Of Materials for the Application Circuit**

Measurements have been performed with multi-layer inductors from other manufacturers (e.g. Würth) and the measurement results were the same as when using the Murata part.

The Gerber files for the CC2500EM reference design ([4]) are available from the TI website.

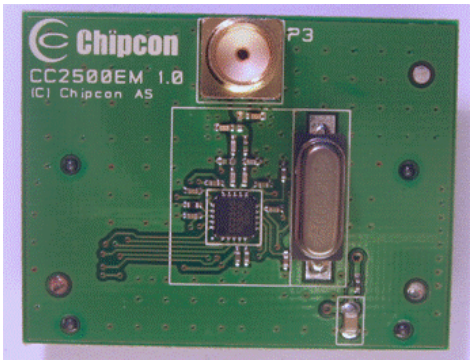


**Figure 4: CC2500EM Reference Design ([4])**

## 8 Configuration Overview

***CC2500*** can be configured to achieve optimum performance for many different applications. Configuration is done using the SPI interface. The following key parameters can be programmed:

- Power-down / power up mode
- Crystal oscillator power-up / power-down
- Receive / transmit mode
- RF channel selection
- Data rate
- Modulation format
- RX channel filter bandwidth
- RF output power
- Data buffering with separate 64-byte receive and transmit FIFOs
- Packet radio hardware support
- Forward Error Correction (FEC) with interleaving
- Data Whitening
- Wake-On-Radio (WOR)

Details of each configuration register can be found in Section 32, starting on page 57.

Figure 5 shows a simplified state diagram that explains the main ***CC2500*** states, together with typical usage and current consumption. For detailed information on controlling the ***CC2500*** state machine, and a complete state diagram, see Section 19, starting on page 39.

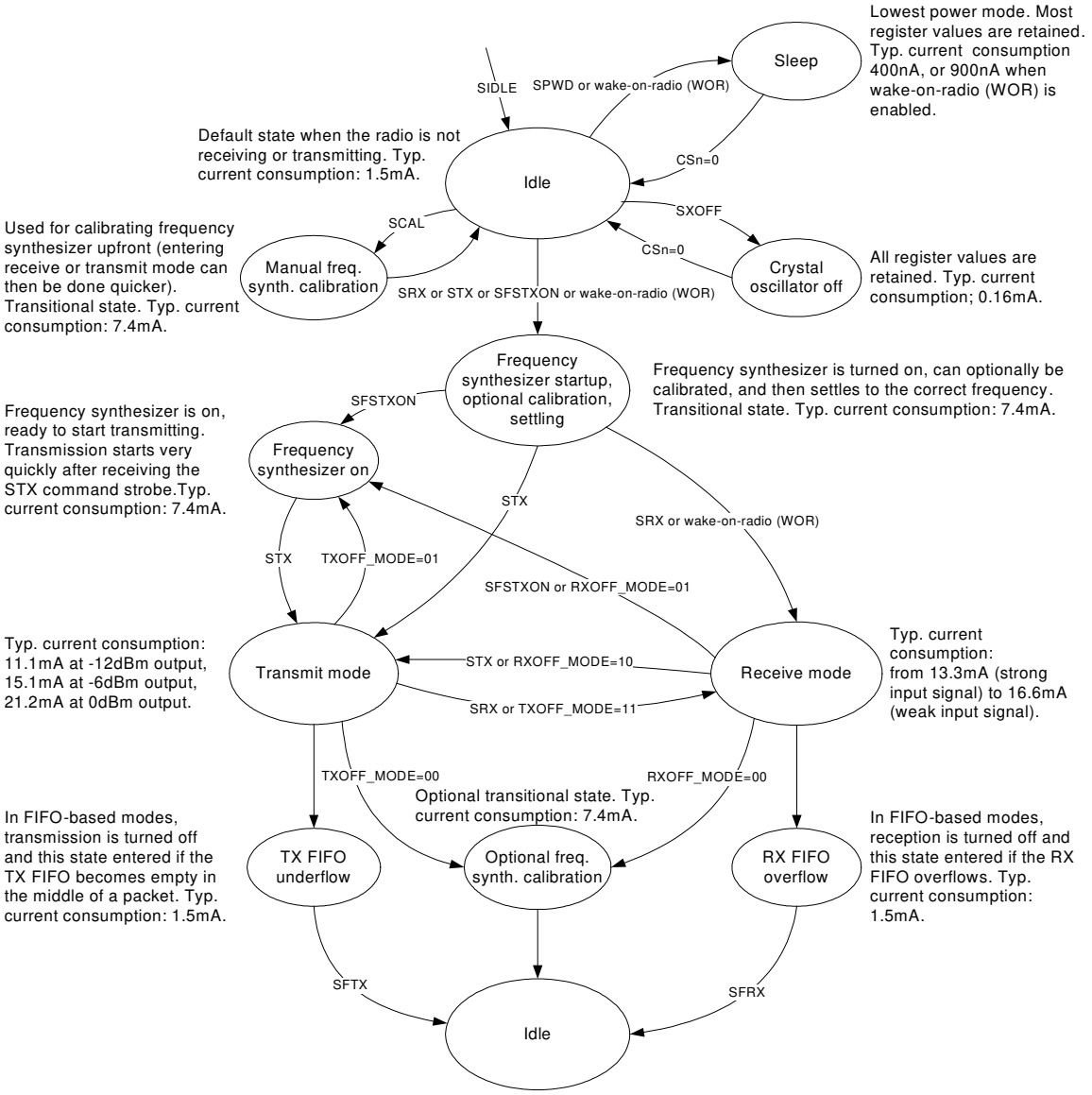


**Figure 5: Simplified State Diagram with Typical Usage and Current Consumption at 250 kBaud Data Rate and `MDMCFG2.DEM_DCFILT_OFF`=1 (current optimized)**

## 9 Configuration Software

***CC2500*** can be configured using the SmartRF® Studio software [5]. The SmartRF® Studio software is highly recommended for obtaining optimum register settings, and for evaluating performance and functionality. A screenshot of the SmartRF® Studio user interface for ***CC2500*** is shown in Figure 6.

After chip reset, all the registers have default values as shown in the tables in Section 32. The optimum register setting might differ from the default value. After a reset all registers that shall be different from the default value therefore needs to be programmed through the SPI interface.

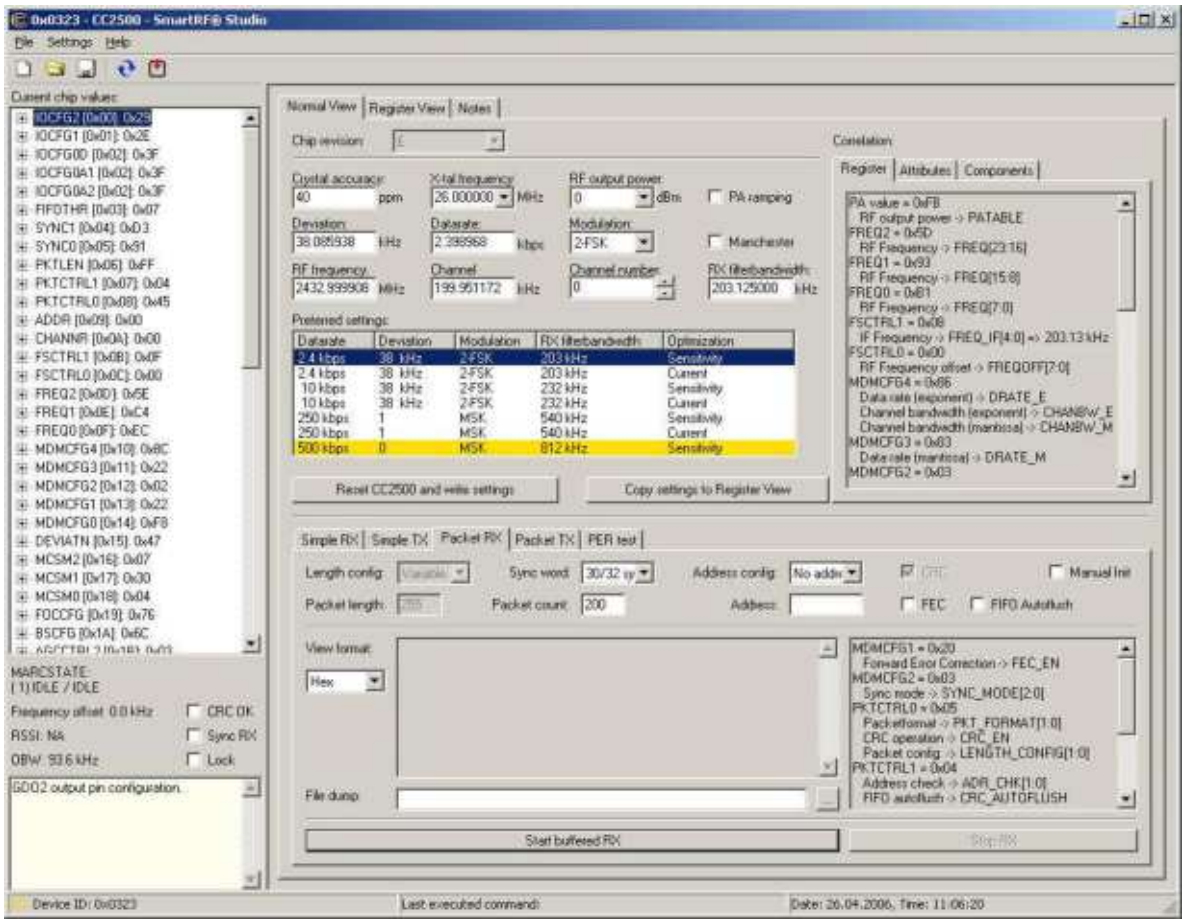


**Figure 6: SmartRF® Studio [5] User Interface**

## 10 4-wire Serial Configuration and Data Interface

***CC2500*** is configured via a simple 4-wire SPI-compatible interface (SI, SO, SCLK and CSn) where ***CC2500*** is the slave. This interface is also used to read and write buffered data. All transfers on the SPI interface are done most significant bit first.

All transactions on the SPI interface start with a header byte containing a R/W bit, a burst access bit (B), and a 6-bit address ($A_5$ – $A_0$).

The CSn pin must be kept low during transfers on the SPI bus. If CSn goes high during the transfer of a header byte or during read/write from/to a register, the transfer will be cancelled. The timing for the address and data transfer on the SPI interface is shown in Figure 7 with reference to Table 16.

When CSn is pulled low, the MCU must wait until ***CC2500*** SO pin goes low before starting to transfer the header byte. This indicates that the crystal is running. Unless the chip was in the SLEEP or XOFF states, the SO pin will always go low immediately after taking CSn low.

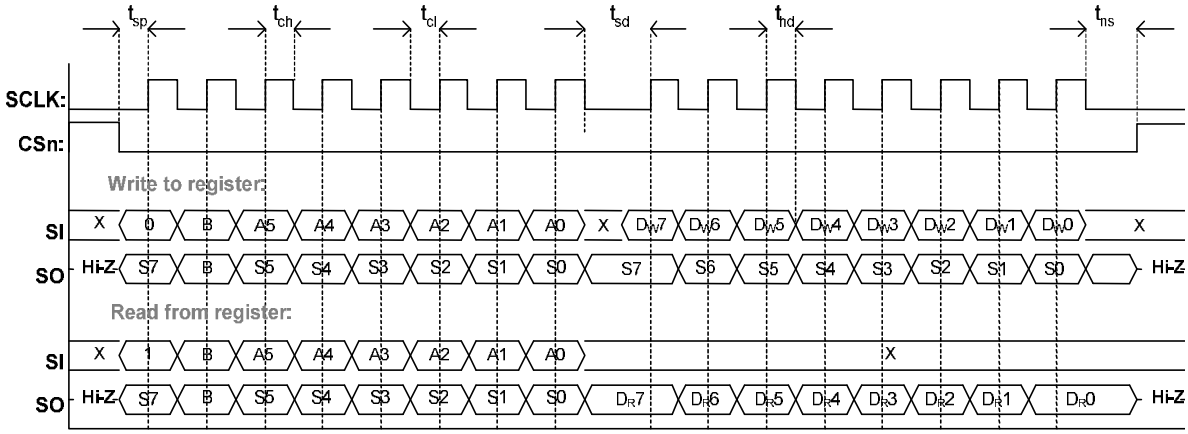


**Figure 7: Configuration Register Write and Read Operations**

| Parameter | Description | | Min | Max | Units |
|---|---|---|---|---|---|
| $f_{SCLK}$ | SCLK frequency<br>100 ns delay inserted between address byte and data byte (single access), or between address and data, and between each data byte (burst access). | | - | 10 | MHz |
| | SCLK frequency, single access<br>No delay between address and data byte | | | 9 | MHz |
| | SCLK frequency, burst access<br>No delay between address and data byte, or between data bytes | | | 6.5 | MHz |
| $t_{sp,pd}$ | CSn low to positive edge on SCLK, in power-down mode | | 150 | | µs |
| $t_{sp}$ | CSn low to positive edge on SCLK, in active mode | | 20 | - | ns |
| $t_{ch}$ | Clock high | | 50 | - | ns |
| $t_{cl}$ | Clock low | | 50 | - | ns |
| $t_{rise}$ | Clock rise time | | - | 5 | ns |
| $t_{fall}$ | Clock fall time | | - | 5 | ns |
| $t_{sd}$ | Setup data (negative SCLK edge) to positive edge on SCLK<br>($t_{sd}$ applies between address and data bytes, and between data bytes) | Single access | 55 | - | ns |
| | | Burst access | 76 | - | ns |
| $t_{hd}$ | Hold data after positive edge on SCLK | | 20 | - | ns |
| $t_{ns}$ | Negative edge on SCLK to CSn high | | 20 | - | ns |

**Table 16: SPI Interface Timing Requirements**

**Note:** The minimum $t_{sp,pd}$ figure in Table 16 can be used in cases where the user does not read the CHIP_RDYn signal. CSn low to positive edge on SCLK when the chip is woken from power-down depends on the start-up time of the crystal being used. The 150 us in Table 16 is the crystal oscillator start-up time measured on CC2500EM reference design ([4]) using crystal AT-41CD2 from NDK.

## 10.1 Chip Status Byte

When the header byte, data byte or, command strobe is sent on the SPI interface, the chip status byte is sent by the **CC2500** on the SO pin. The status byte contains key status signals, useful for the MCU. The first bit, s7, is the CHIP_RDYn signal; this signal must go low before the first positive edge of SCLK. The CHIP_RDYn signal indicates that the crystal is running.

Bits 6, 5, and 4 comprise the STATE value. This value reflects the state of the chip. The XOSC and power to the digital core is on in the IDLE state, but all other modules are in power down. The frequency and channel

configuration should only be updated when the chip is in this state. The RX state will be active when the chip is in receive mode. Likewise, TX is active when the chip is transmitting.

The last four bits (3:0) in the status byte contains FIFO_BYTES_AVAILABLE. For read operations (the R/W bit in the header byte is set to 1), the FIFO_BYTES_AVAILABLE field contains the number of bytes available for reading from the RX FIFO. For write operations (the R/W bit in the header byte is set to 0), the FIFO_BYTES_AVAILABLE field contains the number of bytes that can be written to the TX FIFO. When FIFO_BYTES_AVAILABLE=15, 15 or more bytes are available/free.

Table 17 gives a status byte summary.

| Bits | Name | Description |
|---|---|---|
| 7 | CHIP_RDYn | Stays high until power and crystal have stabilized. Should always be low when using the SPI interface. |
| 6:4 | STATE[2:0] | Indicates the current main state machine mode |
| 3:0 | FIFO_BYTES_AVAILABLE[3:0] | The number of bytes available in the RX FIFO or free bytes in the TX FIFO |

| Value | State | Description |
|---|---|---|
| 000 | IDLE | Idle state<br>(Also reported for some transitional states instead of SETTLING or CALIBRATE) |
| 001 | RX | Receive mode |
| 010 | TX | Transmit mode |
| 011 | FSTXON | Frequency synthesizer is on, ready to start transmitting |
| 100 | CALIBRATE | Frequency synthesizer calibration is running |
| 101 | SETTLING | PLL is settling |
| 110 | RXFIFO_OVERFLOW | RX FIFO has overflowed. Read out any useful data, then flush the FIFO with SFRX |
| 111 | TXFIFO_UNDERFLOW | TX FIFO has underflowed. Acknowledge with SFTX |

**Table 17: Status Byte Summary**

## 10.2 Register Access

The configuration registers of the CC2500 are located on SPI addresses from 0x00 to 0x2E. Table 35 on page 58 lists all configuration registers. It is highly recommended to use SmartRF® Studio [5] to generate optimum register settings. The detailed description of each register is found in Section 32.1, starting on page 61. All configuration registers can be both written to and read. The R/W bit controls if the register should be written to or read. When writing to registers, the status byte is sent on the SO pin each time a header byte or data byte is transmitted on the SI pin. When reading from registers, the status byte is sent on the SO pin each time a header byte is transmitted on the SI pin.

Registers with consecutive addresses can be accessed in an efficient way by setting the burst bit (B) in the header byte. The address bits ($A_5$ – $A_0$) set the start address in an internal address counter. This counter is incremented by one each new byte (every 8 clock pulses). The burst access is either a read or a write access and must be terminated by setting CSn high.

For register addresses in the range 0x30-0x3D, the burst bit is used to select between status registers, burst bit is one, and command strobes, burst bit is zero (see Section 10.4 below). Because of this, burst access is not available for status registers and they must be accessed one at a time. The status registers can only be read.

## 10.3 SPI Read

When reading register fields over the SPI interface while the register fields are updated

by the radio hardware (e.g. MARCSTATE or TXBYTES), there is a small, but finite, probability that a single read from the register is being corrupt. As an example, the probability of any single read from TXBYTES being corrupt, assuming the maximum data rate is used, is approximately 80 ppm. Refer to the CC2500 Errata Notes [1] for more details.

### 10.4 Command Strobes

Command strobes may be viewed as single byte instructions to CC2500. By addressing a command strobe register, internal sequences will be started. These commands are used to disable the crystal oscillator, enable receive mode, enable wake-on-radio etc. The 13 command strobes are listed in Table 34 on page 57.

The command strobe registers are accessed by transferring a single header byte (no data is being transferred). That is, only the R/W bit, the burst access bit (set to 0), and the six address bits (in the range 0x30 through 0x3D) are written. The R/W bit can be either one or zero and will determine how the FIFO_BYTES_AVAILABLE field in the status byte should be interpreted.

When writing command strobes, the status byte is sent on the SO pin.

A command strobe may be followed by any other SPI access without pulling CSn high. However, if an SRES strobe is being issued, one will have to wait for SO to go low again before the next header byte can be issued as shown in Figure 8. The command strobes are executed immediately, with the exception of the SPWD and the SXOFF strobes that are executed when CSn goes high.

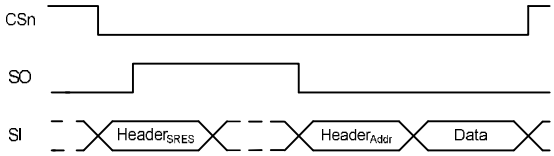


**Figure 8: SRES Command Strobe**

### 10.5 FIFO Access

The 64-byte TX FIFO and the 64-byte RX FIFO are accessed through the 0x3F address. When the R/W bit is zero, the TX FIFO is accessed, and the RX FIFO is accessed when the R/W bit is one.

The TX FIFO is write-only, while the RX FIFO is read-only.

The burst bit is used to determine if the FIFO access is a single byte access or a burst access. The single byte access method expects a header byte with the burst bit set to zero and one data byte. After the data byte a new header byte is expected; hence, CSn can remain low. The burst access method expects one header byte and then consecutive data bytes until terminating the access by setting CSn high.

The following header bytes access the FIFOs:

- 0x3F: Single byte access to TX FIFO
- 0x7F: Burst access to TX FIFO
- 0xBF: Single byte access to RX FIFO
- 0xFF: Burst access to RX FIFO

When writing to the TX FIFO, the status byte (see Section 10.1) is output for each new data byte on SO, as shown in Figure 7. This status byte can be used to detect TX FIFO underflow while writing data to the TX FIFO. Note that the status byte contains the number of bytes free *before* writing the byte in progress to the TX FIFO. When the last byte that fits in the TX FIFO is transmitted on SI, the status byte received concurrently on SO will indicate that one byte is free in the TX FIFO.

The TX FIFO may be flushed by issuing a SFTX command strobe. Similarly, a SFRX command strobe will flush the RX FIFO. A SFTX or SFRX command strobe can only be issued in the IDLE, TXFIFO_UNDERLOW or RXFIFO_OVERFLOW states. Both FIFOs are flushed when going to the SLEEP state.

Figure 9 gives a brief overview of different register access types possible.

### 10.6 PATABLE Access

The 0x3E address is used to access the PATABLE, which is used for selecting PA power control settings. The PATABLE is an 8-byte table, but not all entries into this table are used. The entries to use are selected by the 3-bit value FREND0.PA_POWER.

- When using 2-FSK, GFSK, or MSK modulation only the first entry into this table is used (index 0).

- When using OOK modulation the first two entries into this table are used (index 0 and index 1).

Since the PATABLE is an 8-byte table, the table is written and read from the lowest setting (0) to the highest (7), one byte at a time. An index counter is used to control the access to the table. This counter is incremented each time a byte is read or written to the table, and set to the lowest index when CSn is high. When the highest value is reached the counter restarts at 0.

The access to the PATABLE is either single byte or burst access depending on the burst bit. When using burst access the index counter will count up; when reaching 7 the counter will restart at 0. The R/W bit controls whether the access is a write access (R/W=0) or a read access (R/W=1).

If one byte is written to the PATABLE and this value is to be read out then CSn must be set high before the read access in order to set the index counter back to zero.

Note that the content of the PATABLE is lost when entering the SLEEP state, except for the first byte (index 0).

See Section 24 on page 46 for output power programming details.

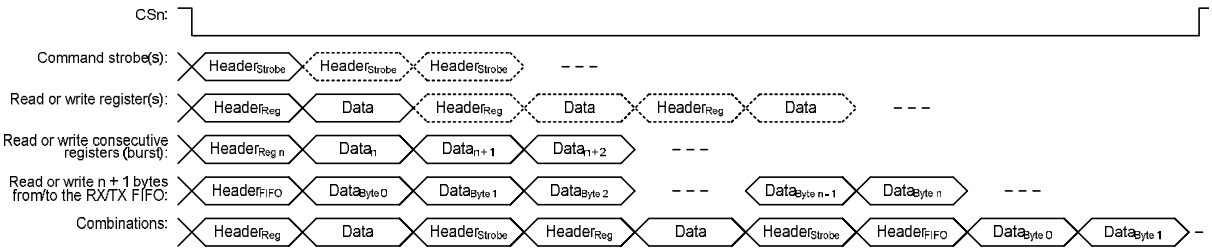


**Figure 9: Register Access Types**

## 11 Microcontroller Interface and Pin Configuration

In a typical system, ***CC2500*** will interface to a microcontroller. This microcontroller must be able to:

- Program ***CC2500*** into different modes
- Read and write buffered data
- Read back status information via the 4-wire SPI-bus configuration interface (SI, SO, SCLK and CSn)

### 11.1 Configuration Interface

The microcontroller uses four I/O pins for the SPI configuration interface (SI, SO, SCLK and CSn). The SPI is described in Section 10 on page 21.

### 11.2 General Control and Status Pins

The ***CC2500*** has two dedicated configurable pins (GDO0 and GDO2) and one shared pin (GDO1) that can output internal status information useful for control software. These pins can be used to generate interrupts on the MCU. See Section 28 on page 51 for more details on the signals that can be programmed. GDO1 is shared with the SO pin in the SPI interface. The default setting for GDO1/SO is 3-state output. By selecting any other of the programming options the GDO1/SO pin will become a generic pin. When CSn is low, the pin will always function as a normal SO pin.

In the synchronous and asynchronous serial modes, the GDO0 pin is used as a serial TX data input pin while in transmit mode.

The GDO0 pin can also be used for an on-chip analog temperature sensor. By measuring the voltage on the GDO0 pin with an external ADC, the temperature can be calculated. Specifications for the temperature sensor are found in Section 4.7 on page 14.

With default PTEST register setting (0x7F) the temperature sensor output is only available when the frequency synthesizer is enabled (e.g. the MANCAL, FSTXON, RX and TX states). It is necessary to write 0xBF to the PTEST register to use the analog temperature sensor in the IDLE state. Before leaving the IDLE state, the PTEST register should be restored to its default value (0x7F).

### 11.3 Optional Radio Control Feature

The **CC2500** has an optional way of controlling the radio, by reusing SI, SCLK and CSn from the SPI interface. This feature allows for a simple three-pin control of the major states of the radio: SLEEP, IDLE, RX and TX.

This optional functionality is enabled with the MCSM0.PIN_CTRL_EN configuration bit.

State changes are commanded as follows: When CSn is high the SI and SCLK is set to the desired state according to Table 18. When CSn goes low the state of SI and SCLK is latched and a command strobe is generated internally according to the control coding. It is only possible to change state with this functionality. That means that for instance RX will not be restarted if SI and SCLK are set to RX and CSn toggles. When CSn is low the SI and SCLK has normal SPI functionality.

All pin control command strobes are executed immediately, except the SPWD strobe, which is delayed until CSn goes high.

| CSn | SCLK | SI | Function |
|---|---|---|---|
| 1 | X | X | Chip unaffected by SCLK/SI |
| ↓ | 0 | 0 | Generates SPWD strobe |
| ↓ | 0 | 1 | Generates STX strobe |
| ↓ | 1 | 0 | Generates SIDLE strobe |
| ↓ | 1 | 1 | Generates SRX strobe |
| 0 | SPI mode | SPI mode | SPI mode (wakes up into IDLE if in SLEEP/XOFF) |

**Table 18: Optional Pin Control Coding**

## 12 Data Rate Programming

The data rate used when transmitting, or the data rate expected in receive is programmed by the MDMCFG3.DRATE_M and the MDMCFG4.DRATE_E configuration registers. The data rate is given by the formula below. As the formula shows, the programmed data rate depends on the crystal frequency.

$$R_{DATA} = \frac{(256 + DRATE_M) \cdot 2^{DRATE_E}}{2^{28}} \cdot f_{XOSC}$$

The following approach can be used to find suitable values for a given data rate:

$$DRATE_E = \left\lfloor \log_2\left(\frac{R_{DATA} \cdot 2^{20}}{f_{XOSC}}\right)\right\rfloor$$

$$DRATE_M = \frac{R_{DATA} \cdot 2^{28}}{f_{XOSC} \cdot 2^{DRATE_E}} - 256$$

If DRATE_M is rounded to the nearest integer and becomes 256, increment DRATE_E and use DRATE_M=0.

The data rate can be set from 1.2 kBaud to 500 kBaud with the minimum step size of:

| Min Data Rate [kBaud] | Typical Data Rate [kBaud] | Max Data Rate [kBaud] | Data Rate Step Size [kBaud] |
|---|---|---|---|
| 0.8 | 1.2/2.4 | 3.17 | 0.0062 |
| 3.17 | 4.8 | 6.35 | 0.0124 |
| 6.35 | 9.6 | 12.7 | 0.0248 |
| 12.7 | 19.6 | 25.4 | 0.0496 |
| 25.4 | 38.4 | 50.8 | 0.0992 |
| 50.8 | 76.8 | 101.6 | 0.1984 |
| 101.6 | 153.6 | 203.1 | 0.3967 |
| 203.1 | 250 | 406.3 | 0.7935 |
| 406.3 | 500 | 500 | 1.5869 |

**Table 19: Data Rate Step Size**

## 13 Receiver Channel Filter Bandwidth

In order to meet different channel width requirements, the receiver channel filter is programmable. The MDMCFG4.CHANBW_E and MDMCFG4.CHANBW_M configuration registers control the receiver channel filter bandwidth, which scales with the crystal oscillator frequency. The following formula gives the relation between the register settings and the channel filter bandwidth:

$$BW_{channel} = \frac{f_{XOSC}}{8 \cdot (4 + CHANBW_M) \cdot 2^{CHANBW_E}}$$

For best performance, the channel filter bandwidth should be selected so that the signal bandwidth occupies at most 80% of the channel filter bandwidth. The channel centre tolerance due to crystal accuracy should also be subtracted from the signal bandwidth. The following example illustrates this:

With the channel filter bandwidth set to 600 kHz, the signal should stay within 80% of 600 kHz, which is 480 kHz. Assuming 2.44 GHz frequency and ±20 ppm frequency uncertainty for both the transmitting device and the receiving device, the total frequency uncertainty is ±40 ppm of 2.44 GHz, which is ±98 kHz. If the whole transmitted signal bandwidth is to be received within 480 kHz, the transmitted signal bandwidth should be maximum 480 kHz – 2·98 kHz, which is 284 kHz.

The **CC2500** supports the following channel filter bandwidths:

| MDMCFG4. | MDMCFG4.CHANBW_E | | | |
|---|---|---|---|---|
| CHANBW_M | 00 | 01 | 10 | 11 |
| 00 | 812 | 406 | 203 | 102 |
| 01 | 650 | 325 | 162 | 81 |
| 10 | 541 | 270 | 135 | 68 |
| 11 | 464 | 232 | 116 | 58 |

**Table 20: Channel Filter Bandwidths [kHz] (assuming a 26 MHz crystal)**

## 14 Demodulator, Symbol Synchronizer and Data Decision

**CC2500** contains an advanced and highly configurable demodulator. Channel filtering and frequency offset compensation is performed digitally. To generate the RSSI level (see Section 17.3 for more information) the signal level in the channel is estimated. Data filtering is also included for enhanced performance.

### 14.1 Frequency Offset Compensation

When using 2-FSK, GFSK, or MSK modulation, the demodulator will compensate for the offset between the transmitter and receiver frequency, within certain limits, by estimating the centre of the received data. This value is available in the FREQEST status register. Writing the value from FREQEST into FSCTRL0.FREQOFF the frequency synthesizer is automatically adjusted according to the estimated frequency offset.

The tracking range of the algorithm is selectable as fractions of the channel bandwidth with the FOCCFG.FOC_LIMIT configuration register.

If the FOCCFG.FOC_BS_CS_GATE bit is set, the offset compensator will freeze until carrier sense asserts. This may be useful when the radio is in RX for long periods with no traffic, since the algorithm may drift to the boundaries when trying to track noise.

The tracking loop has two gain factors, which affects the settling time and noise sensitivity of the algorithm. FOCCFG.FOC_PRE_K sets the gain before the sync word is detected, and FOCCFG.FOC_POST_K selects the gain after the sync word has been found.

Note that frequency offset compensation is not supported for OOK modulation.

### 14.2 Bit Synchronization

The bit synchronization algorithm extracts the clock from the incoming symbols. The algorithm requires that the expected data rate is programmed as described in Section 12 on page 26. Re-synchronization is performed continuously to adjust for error in the incoming symbol rate.

### 14.3 Byte Synchronization

Byte synchronization is achieved by a continuous sync word search. The sync word is a 16 bit configurable field (can be repeated to get a 32 bit) that is automatically inserted at the start of the packet by the modulator in transmit mode. The demodulator uses this field to find the byte boundaries in the stream of bits. The sync word will also function as a system identifier, since only packets with the correct predefined sync word will be received if the sync word detection in RX is enabled in register `MDMCFG2` (see Section 17.1). The sync word detector correlates against the user-configured 16 or 32 bit sync word. The correlation threshold can be set to 15/16, 16/16, or 30/32 bits match. The sync word can be further qualified using the preamble quality indicator mechanism described below and/or a carrier sense condition. The sync word is configured through the `SYNC1` and `SYNC0` registers.

In order to make false detections of sync words less likely, a mechanism called preamble quality indication (PQI) can be used to qualify the sync word. A threshold value for the preamble quality must be exceeded in order for a detected sync word to be accepted. See Section 17.2 on page 34 for more details.

## 15 Packet Handling Hardware Support

The *CC2500* has built-in hardware support for packet oriented radio protocols.

In transmit mode, the packet handler can be configured to add the following elements to the packet stored in the TX FIFO:

- A programmable number of preamble bytes
- A two byte synchronization (sync) word. Can be duplicated to give a 4-byte sync word (recommended). It is not possible to only insert preamble or only insert a sync word.
- A CRC checksum computed over the data field

The recommended setting is 4-byte preamble and 4-byte sync word, except for 500 kBaud data rate where the recommended preamble length is 8 bytes.

In addition, the following can be implemented on the data field and the optional 2-byte CRC checksum:

- Whitening of the data with a PN9 sequence.
- Forward error correction by the use of interleaving and coding of the data (convolutional coding).

In receive mode, the packet handling support will de-construct the data packet by implementing the following (if enabled):

- Preamble detection
- Sync word detection
- CRC computation and CRC check
- One byte address check
- Packet length check (length byte checked against a programmable maximum length)
- De-whitening
- De-interleaving and decoding

Optionally, two status bytes (see Table 21 and Table 22) with RSSI value, Link Quality Indication, and CRC status can be appended in the RX FIFO.

| Bit | Field Name | Description |
|---|---|---|
| 7:0 | RSSI | RSSI value |

**Table 21: Received Packet Status Byte 1 (first byte appended after the data)**

| Bit | Field Name | Description |
|---|---|---|
| 7 | CRC_OK | 1: CRC for received data OK (or CRC disabled)<br>0: CRC error in received data |
| 6:0 | LQI | The Link Quality Indicator estimates how easily a received signal can be demodulated |

**Table 22: Received Packet Status Byte 2 (second byte appended after the data)**

Note that register fields that control the packet handling features should only be altered when *CC2500* is in the IDLE state.

### 15.1 Data Whitening

From a radio perspective, the ideal over the air data are random and DC free. This results in the smoothest power distribution over the occupied bandwidth. This also gives the regulation loops in the receiver uniform operation conditions (no data dependencies).

Real world data often contain long sequences of zeros and ones. Performance can then be improved by whitening the data before transmitting, and de-whitening the data in the receiver. With **CC2500**, this can be done automatically by setting `PKTCTRL0.WHITE_DATA`=1. All data, except the preamble and the sync word, are then XOR-ed with a 9-bit pseudo-random (PN9) sequence before being transmitted as shown in Figure 10. At the receiver end, the data are XOR-ed with the same pseudo-random sequence. This way, the whitening is reversed, and the original data appear in the receiver. The PN9 sequence is reset to all 1's.

Data whitening can only be used when `PKTCTRL0.CC2400_EN`=0 (default).

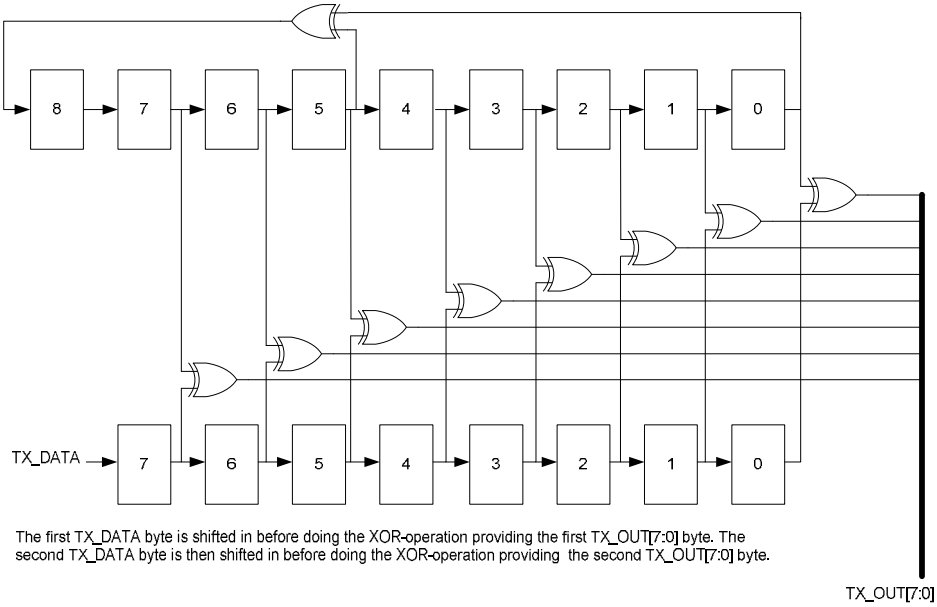


**Figure 10: Data Whitening in TX Mode**

### 15.2 Packet Format

The format of the data packet can be configured and consists of the following items (see Figure 11):

- Preamble
- Synchronization word
- Length byte or constant programmable packet length
- Optional address byte
- Payload
- Optional 2 byte CRC

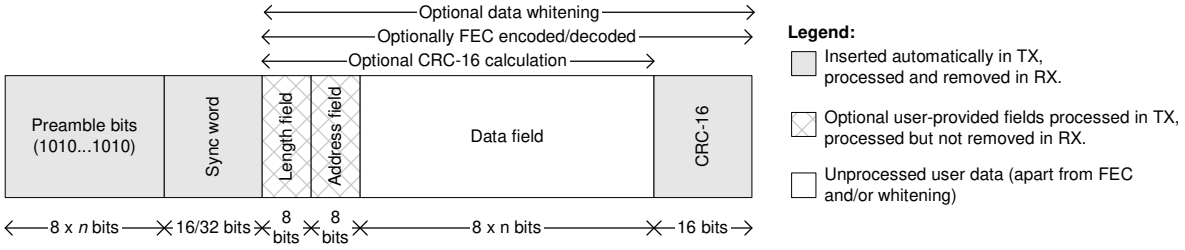


**Figure 11: Packet Format**

The preamble pattern is an alternating sequence of ones and zeros (101010101…). The minimum length of the preamble is programmable. When enabling TX, the modulator will start transmitting the preamble. When the programmed number of preamble bytes has been transmitted, the modulator will send the sync word and then data from the TX FIFO if data is available. If the TX FIFO is empty, the modulator will continue to send preamble bytes until the first byte is written to the TX FIFO. The modulator will then send the sync word and then the data bytes. The number of preamble bytes is programmed with the MDMCFG1.NUM_PREAMBLE value.

The synchronization word is a two-byte value set in the SYNC1 and SYNC0 registers. The sync word provides byte synchronization of the incoming packet. A one-byte sync word can be emulated by setting the SYNC1 value to the preamble pattern. It is also possible to emulate a 32 bit sync word by using MDMCFG2.SYNC_MODE=3 or 7. The sync word will then be repeated twice.

**CC2500** supports both fixed packet length protocols and variable packet length protocols. Variable or fixed packet length mode can be used for packets up to 255 bytes. For longer packets, infinite packet length mode must be used.

Fixed packet length mode is selected by setting PKTCTRL0.LENGTH_CONFIG=0. The desired packet length is set by the PKTLEN register.

In variable packet length mode, PKTCTRL0.LENGTH_CONFIG=1, the packet length is configured by the first byte after the sync word. The packet length is defined as the payload data, excluding the length byte and the optional CRC. The PKTLEN register is used to set the maximum packet length allowed in RX. Any packet received with a length byte with a value greater than PKTLEN will be discarded.

With PKTCTRL0.LENGTH_CONFIG=2, the packet length is set to infinite and transmission and reception will continue until turned off manually. As described in the next section, this can be used to support packet formats with different length configuration than natively supported by **CC2500**. One should make sure that TX mode is not turned off during the transmission of the first half of any byte. Refer to the **CC2500** Errata Notes [1] for more details.

Note that the minimum packet length supported (excluding the optional length byte and CRC) is one byte of payload data.

### *15.2.1 Arbitrary Length Field Configuration*

The packet length register, PKTLEN, can be reprogrammed during receive and transmit. In combination with fixed packet length mode (PKTCTRL0.LENGTH_CONFIG=0) this opens the possibility to have a different length field configuration than supported for variable length packets (in variable packet length mode the length byte is the first byte after the sync word). At the start of reception, the packet length is set to a large value. The MCU reads out enough bytes to interpret the length field in the packet. Then the PKTLEN value is set according to this value. The end of packet will occur when the byte counter in the packet handler is equal to the PKTLEN register. Thus, the MCU must be able to program the correct length, before the internal counter reaches the packet length.

### *15.2.2 Packet Length > 256 bytes*

Also the packet automation control register, PKTCTRL0, can be reprogrammed during TX and RX. This opens the possibility to transmit and receive packets that are longer than 256 bytes and still be able to use the packet handling hardware support. At the start of the packet, the infinite packet length mode (PKTCTRL0.LENGTH_CONFIG=2) must be active. On the TX side, the PKTLEN register is set to mod(length,256). On the RX side the MCU reads out enough bytes to interpret the length field in the packet and sets the PKTLEN register to mod(length,256). When less than 256 bytes remains of the packet the MCU disables infinite packet length mode and activates fixed packet length mode. When the internal byte counter reaches the PKTLEN value, the transmission or reception ends (the radio enters the state determined by TXOFF_MODE or RXOFF_MODE). Automatic CRC appending/checking can also be used (by setting PKTCTRL0.CRC_EN=1).

When for example a 600-byte packet is to be transmitted, the MCU should do the following (see also Figure 12):

- Set PKTCTRL0.LENGTH_CONFIG=2.

- Pre-program the PKTLEN register to mod(600,256)=88.
- Transmit at least 345 bytes, for example by filling the 64-byte TX FIFO six times (384 bytes transmitted).
- Set PKTCTRL0.LENGTH_CONFIG=0.
- The transmission ends when the packet counter reaches 88. A total of 600 bytes are transmitted.

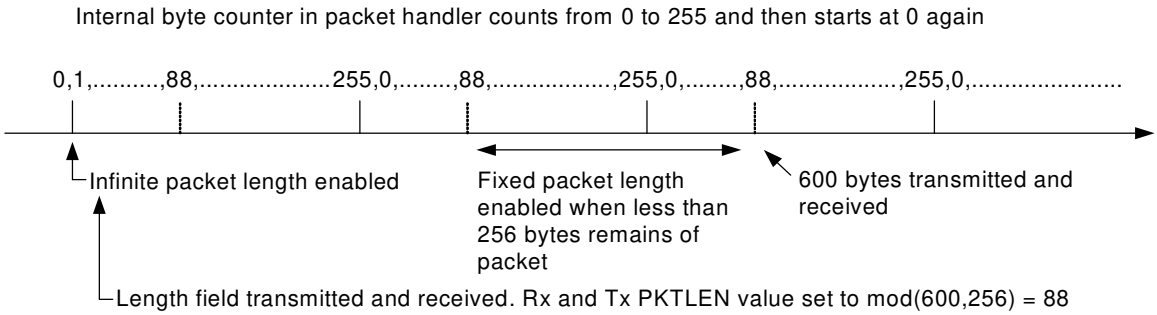


**Figure 12: Packet Length > 256**

## 15.3 Packet Filtering in Receive Mode

CC2500 supports three different types of packet-filtering: address filtering, maximum length filtering and CRC filtering.

### *15.3.1 Address Filtering*

Setting PKTCTRL1.ADR_CHK to any other value than zero enables the packet address filter. The packet handler engine will compare the destination address byte in the packet with the programmed node address in the ADDR register and the 0x00 broadcast address when PKTCTRL1.ADR_CHK=$10_b$ or both 0x00 and 0xFF broadcast addresses when PKTCTRL1.ADR_CHK=$11_b$. If the received address matches a valid address, the packet is received and written into the RX FIFO. If the address match fails, the packet is discarded and receive mode restarted (regardless of the MCSM1.RXOFF_MODE setting).

If the received address matches a valid address when using infinite packet length mode *and* address filtering is enabled, 0xFF will be written into the RX FIFO followed by the address byte and then the payload data.

### *15.3.2 Maximum Length Filtering*

In variable packet length mode, PKTCTRL0.LENGTH_CONFIG=1, the PKTLEN.PACKET_LENGTH register value is used to set the maximum allowed packet length. If the received length byte has a larger value than this, the packet is discarded and receive mode restarted (regardless of the MCSM1.RXOFF_MODE setting).

### *15.3.3 CRC Filtering*

The filtering of a packet when CRC check fails is enabled by setting PKTCTRL1.CRC_AUTOFLUSH=1. The CRC auto flush function will flush the *entire* RX FIFO if the CRC check fails. After auto flushing the RX FIFO, the next state depends on the MCSM1.RXOFF_MODE setting. PKTCTRL0.CC2400_EN must be 0 (default) for the CRC auto flush function to work correctly.

When using the auto flush function, the maximum packet length is 63 bytes in variable packet length mode and 64 bytes in fixed packet length mode. Note that the maximum allowed packet length is reduced by two bytes when PKTCTRL1.APPEND_STATUS is enabled, to make room in the RX FIFO for the two status bytes appended at the end of the packet. Since the entire RX FIFO is flushed when the CRC check fails, the previously received packet must be read out of the FIFO before receiving the current packet. The MCU must not read from the current packet until the CRC has been checked as OK.

## 15.4 CRC Check

There are two different CRC implementations. PKTCTRL0.CC2400_EN selects between the 2 options. The CRC check is different for the 2

options. Refer also to the CC2500 Errata Notes [1].

#### 15.4.1 PKTCTRL0.CC2400_EN=0

If PKTCTRL0.CC2400_EN=0 it is possible to read back the CRC status in 2 different ways:

1) Set PKTCTRL1.APPEND_STATUS=1 and read the CRC_OK flag in the MSB of the second byte appended to the RX FIFO after the packet data. This requires double buffering of the packet, i.e. the entire packet content of the RX FIFO must be completely read out before it is possible to check whether the CRC indication is OK or not.

2) To avoid reading the entire RX FIFO, another solution is to use the PKTCTRL1.CRC_AUTOFLUSH feature. If this feature is enabled, the entire RX FIFO will be flushed if the CRC check fails. If GDOx_CFG=0x06 the GDOx pin will be asserted when a sync word is found. The GDOx pin will be de-asserted at the end of the packet. When the latter occurs the MCU should read the number of bytes in the RX FIFO from the RXBYTES.NUM_RXBYTES status register. If RXBYTES.NUM_RXBYTES=0 the CRC check failed and the FIFO is flushed. If RXBYTES.NUM_RXBYTES>0 the CRC check was OK and data can be read out of the FIFO.

#### 15.4.2 PKTCTRL0.CC2400_EN=1

If PKTCTRL0.CC2400_EN=1 the CRC can be checked as outlined in 1) in Section 15.4.1 as well as by reading the CRC_OK flag available in the PKTSTATUS[7] register, in the LQI[7] status register or from one of the GDO pins if GDOx_CFG is 0x07 or 0x15.

The PKTCTRL1.CRC_AUTOFLUSH or data whitening cannot be used when PKTCTRL0.CC2400_EN=1.

### 15.5 Packet Handling in Transmit Mode

The payload that is to be transmitted must be written into the TX FIFO. The first byte written must be the length byte when variable packet length is enabled. The length byte has a value equal to the payload of the packet (including the optional address byte). If address recognition is enabled on the receiver, the second byte written to the TX FIFO must be the address byte. If fixed packet length is enabled, then the first byte written to the TX FIFO should be the address (if the receiver uses address recognition).

The modulator will first send the programmed number of preamble bytes. If data is available in the TX FIFO, the modulator will send the two-byte (optionally 4-byte) sync word and then the payload in the TX FIFO. If CRC is enabled, the checksum is calculated over all the data pulled from the TX FIFO and the result is sent as two extra bytes following the payload data. If the TX FIFO runs empty before the complete packet has been transmitted, the radio will enter TXFIFO_UNDERFLOW state. The only way to exit this state is by issuing an SFTX strobe. Writing to the TX FIFO after it has underflowed will not restart TX mode.

If whitening is enabled, everything following the sync words will be whitened. This is done before the optional FEC/Interleaver stage. Whitening is enabled by setting PKTCTRL0.WHITE_DATA=1.

If FEC/Interleaving is enabled, everything following the sync words will be scrambled by the interleaver and FEC encoded before being modulated. FEC is enabled by setting MDMCFG1.FEC_EN=1.

### 15.6 Packet Handling in Receive Mode

In receive mode, the demodulator and packet handler will search for a valid preamble and the sync word. When found, the demodulator has obtained both bit and byte synchronism and will receive the first payload byte.

If FEC/Interleaving is enabled, the FEC decoder will start to decode the first payload byte. The interleaver will de-scramble the bits before any other processing is done to the data.

If whitening is enabled, the data will be de-whitened at this stage.

When variable packet length mode is enabled, the first byte is the length byte. The packet handler stores this value as the packet length and receives the number of bytes indicated by the length byte. If fixed packet length mode is used, the packet handler will accept the programmed number of bytes.

Next, the packet handler optionally checks the address and only continues the reception if the address matches. If automatic CRC check is enabled, the packet handler computes CRC and matches it with the appended CRC checksum.

At the end of the payload, the packet handler will optionally write two extra packet status

bytes that contain CRC status, link quality indication and RSSI value.

### 15.7 Packet Handling in Firmware

When implementing a packet oriented radio protocol in firmware, the MCU needs to know when a packet has been received/transmitted. Additionally, for packets longer than 64 bytes the RX FIFO needs to be read while in RX and the TX FIFO needs to be refilled while in TX. This means that the MCU needs to know the number of bytes that can be read from or written to the RX FIFO and TX FIFO respectively. There are two possible solutions to get the necessary status information:

a) Interrupt driven solution

In both RX and TX one can use one of the GDO pins to give an interrupt when a sync word has been received/transmitted and/or when a complete packet has been received/transmitted (IOCFGx=0x06). In addition, there are two configurations for the IOCFGx register that are associated with the RX FIFO (IOCFGx=0x00 and IOCFGx=0x01) and two that are associated with the TX FIFO (IOCFGx=0x02 and IOCFG=0x03) that can be used as interrupt sources to provide information on how many bytes are in the RX FIFO and TX FIFO respectively. See Table 33.

b) SPI polling

The PKTSTATUS register can be polled at a given rate to get information about the current GDO2 and GDO0 values respectively. The RXBYTES and TXBYTES registers can be polled at a given rate to get information about the number of bytes in the RX FIFO and TX FIFO respectively. Alternatively, the number of bytes in the RX FIFO and TX FIFO can be read from the chip status byte returned on the MISO line each time a header byte, data byte, or command strobe is sent on the SPI bus.

It is recommended to employ an interrupt driven solution as high rate SPI polling will reduce the RX sensitivity. Furthermore, as explained in Section 10.3 and the CC2500 Errata Notes [1], when using SPI polling there is a small, but finite, probability that a single read from registers PKTSTATUS, RXBYTES and TXBYTES is being corrupt. The same is the case when reading the chip status byte.

Refer to the TI website for SW examples ([6] and [7]).

## 16 Modulation Formats

CC2500 supports amplitude, frequency and phase shift modulation formats. The desired modulation format is set in the MDMCFG2.MOD_FORMAT register.

Optionally, the data stream can be Manchester coded by the modulator and decoded by the demodulator. This option is enabled by setting MDMCFG2.MANCHESTER_EN=1. Manchester encoding is not supported at the same time as using the FEC/Interleaver option.

### 16.1 Frequency Shift Keying

2-FSK can optionally be shaped by a Gaussian filter with BT=1, producing a GFSK modulated signal.

The frequency deviation is programmed with the DEVIATION_M and DEVIATION_E values in the DEVIATN register. The value has an exponent/mantissa form, and the resultant deviation is given by:

$$f_{dev} = \frac{f_{xosc}}{2^{17}} \cdot (8 + DEVIATION_M) \cdot 2^{DEVIATION_E}$$

The symbol encoding is shown in Table 23.

| Format | Symbol | Coding |
|---|---|---|
| 2-FSK/GFSK | ‘0’ | – Deviation |
| | ‘1’ | + Deviation |

**Table 23: Symbol Encoding for 2-FSK/GFSK Modulation**

### 16.2 Minimum Shift Keying

When using MSK[1], the complete transmission (preamble, sync word and payload) will be MSK modulated.

Phase shifts are performed with a constant transition time.

[1] Identical to offset QPSK with half-sine shaping (data coding may differ)

The fraction of a symbol period used to change the phase can be modified with the DEVIATN.DEVIATION_M setting. This is equivalent to changing the shaping of the symbol.

The MSK modulation format implemented in CC2500 inverts the sync word and data compared to e.g. signal generators.

### 16.3 Amplitude Modulation

The supported amplitude modulation On-Off Keying (OOK) simply turns on or off the PA to modulate 1 and 0 respectively.

## 17 Received Signal Qualifiers and Link Quality Information

CC2500 has several qualifiers that can be used to increase the likelihood that a valid sync word is detected.

### 17.1 Sync Word Qualifier

If sync word detection in RX is enabled in register MDMCFG2 the CC2500 will not start filling the RX FIFO and perform the packet filtering described in Section 15.3 before a valid sync word has been detected. The sync word qualifier mode is set by MDMCFG2.SYNC_MODE and is summarized in Table 24. Carrier sense in Table 24 is described in Section 17.4.

| MDMCFG2.SYNC_MODE | Sync Word Qualifier Mode |
|---|---|
| 000 | No preamble/sync |
| 001 | 15/16 sync word bits detected |
| 010 | 16/16 sync word bits detected |
| 011 | 30/32 sync word bits detected |
| 100 | No preamble/sync, carrier sense above threshold |
| 101 | 15/16 + carrier sense above threshold |
| 110 | 16/16 + carrier sense above threshold |
| 111 | 30/32 + carrier sense above threshold |

**Table 24: Sync Word Qualifier Mode**

### 17.2 Preamble Quality Threshold (PQT)

The Preamble Quality Threshold (PQT) sync-word qualifier adds the requirement that the received sync word must be preceded with a preamble with a quality above a programmed threshold.

Another use of the preamble quality threshold is as a qualifier for the optional RX termination timer. See Section 19.7 on page 43 for details.

The preamble quality estimator increases an internal counter by one each time a bit is received that is different from the previous bit, and decreases the counter by 8 each time a bit is received that is the same as the last bit. The threshold is configured with the register field PKTCTRL1.PQT. A threshold of 4·PQT for this counter is used to gate sync word detection. By setting the value to zero, the preamble quality qualifier of the sync word is disabled.

A “Preamble Quality Reached” signal can be observed on one of the GDO pins by setting IOCFGx.GDOx_CFG=8. It is also possible to determine if preamble quality is reached by checking the PQT_REACHED bit in the PKTSTATUS register. This signal / bit asserts when the received signal exceeds the PQT.

### 17.3 RSSI

The RSSI value is an estimate of the signal level in the chosen channel. This value is based on the current gain setting in the RX chain and the measured signal level in the channel.

In RX mode, the RSSI value can be read continuously from the RSSI status register until the demodulator detects a sync word (when sync word detection is enabled). At that point the RSSI readout value is frozen until the next time the chip enters the RX state. The RSSI value is in dBm with ½dB resolution. The RSSI update rate, $f_{RSSI}$, depends on the receiver filter bandwidth ($BW_{channel}$ defined in Section 13) and AGCCTRL0.FILTER_LENGTH.

$$f_{RSSI} = \frac{2 \cdot BW_{channel}}{8 \cdot 2^{FILTER_LENGTH}}$$

If PKTCTRL1.APPEND_STATUS is enabled the RSSI value at sync word detection is

automatically added to the first byte appended after the data payload.

The RSSI value read from the RSSI status register is a 2's complement number. The following procedure can be used to convert the RSSI reading to an absolute power level (RSSI_dBm).

1) Read the RSSI status register
2) Convert the reading from a hexadecimal number to a decimal number (RSSI_dec)
3) If RSSI_dec ≥ 128 then RSSI_dBm = (RSSI_dec - 256)/2 – RSSI_offset
4) Else if RSSI_dec < 128 then RSSI_dBm = (RSSI_dec)/2 – RSSI_offset

Table 25 provides typical values for the RSSI_offset.

Figure 13 shows typical plots of RSSI readings as a function of input power level for different data rates.

| Data Rate [kBaud] | RSSI_offset [dB] |
|---|---|
| 2.4 | 71 |
| 10 | 69 |
| 250 | 72 |
| 500 | 72 |

**Table 25: Typical RSSI_offset Values**

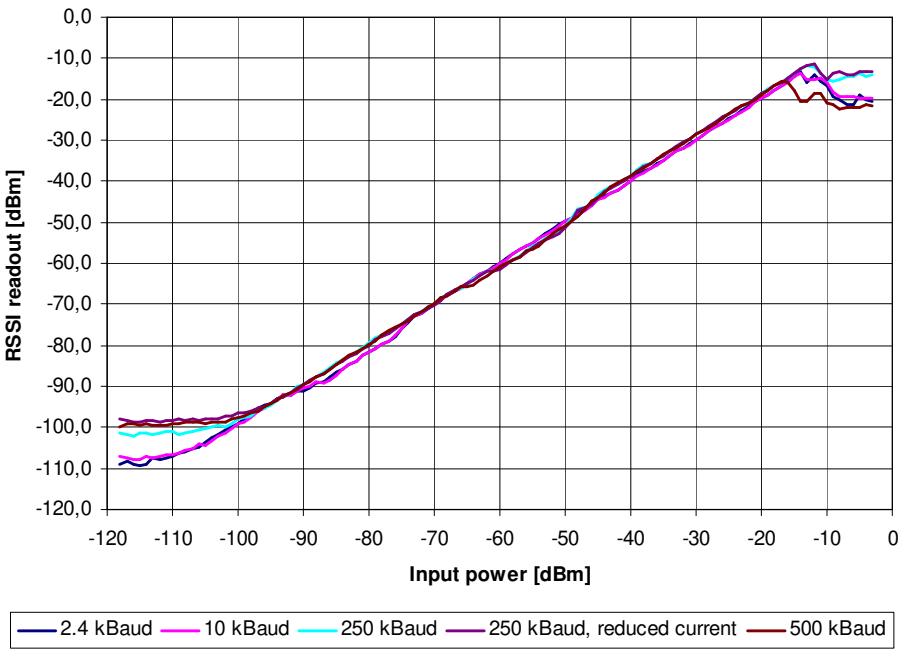


**Figure 13: Typical RSSI Value vs. Input Power Level for Some Typical Data Rates**

### 17.4 Carrier Sense (CS)

The Carrier Sense (CS) flag is used as a sync word qualifier and for CCA. The CS flag can be set based on two conditions, which can be individually adjusted:

- CS is asserted when the RSSI is above a programmable absolute threshold, and de-asserted when RSSI is below the same threshold (with hysteresis).
- CS is asserted when the RSSI has increased with a programmable number of dB from one RSSI sample to the next, and de-asserted when RSSI has decreased with the same number of dB. This setting is not dependent on the absolute signal level and is thus useful to detect signals in environments with a time varying noise floor.

Carrier Sense can be used as a sync word qualifier that requires the signal level to be higher than the threshold for a sync word search to be performed. The signal can also be observed on one of the GDO pins by setting

IOCFGx.GDOx_CFG=14 and in the status register bit PKTSTATUS.CS.

Other uses of Carrier Sense include the TX-if-CCA function (see Section 17.5 on page 37) and the optional fast RX termination (see Section 19.7 on page 43).

CS can be used to avoid interference from e.g. WLAN.

### *17.4.1 CS Absolute Threshold*

The absolute threshold related to the RSSI value depends on the following register fields:

- AGCCTRL2.MAX_LNA_GAIN
- AGCCTRL2.MAX_DVGA_GAIN
- AGCCTRL1.CARRIER_SENSE_ABS_THR
- AGCCTRL2.MAGN_TARGET

For a given AGCCTRL2.MAX_LNA_GAIN and AGCCTRL2.MAX_DVGA_GAIN setting the absolute threshold can be adjusted ±7 dB in steps of 1 dB using CARRIER_SENSE_ABS_THR.

The MAGN_TARGET setting is a compromise between blocker tolerance/selectivity and sensitivity. The value sets the desired signal level in the channel into the demodulator. Increasing this value reduces the headroom for blockers, and therefore close-in selectivity. It is strongly recommended to use SmartRF® Studio [5] to generate the correct MAGN_TARGET setting.

Table 26 and Table 27 show the typical RSSI readout values at the CS threshold at 2.4 kBaud and 250 kBaud data rate respectively. The default CARRIER_SENSE_ABS_THR=0 (0 dB) and MAGN_TARGET=3 (33 dB) have been used.

For other data rates the user must generate similar tables to find the CS absolute threshold.

| | | MAX_DVGA_GAIN[1:0] | | | |
|---|---|---|---|---|---|
| | | 00 | 01 | 10 | 11 |
| MAX_LNA_GAIN[2:0] | 000 | -99 | -93 | -87 | -81.5 |
| | 001 | -97 | -90.5 | -85 | -78.5 |
| | 010 | -93.5 | -87 | -82 | -76 |
| | 011 | -91.5 | -86 | -80 | -74 |
| | 100 | -90.5 | -84 | -78 | -72.5 |
| | 101 | -88 | -82.5 | -76 | -70 |
| | 110 | -84.5 | -78.5 | -73 | -67 |
| | 111 | -82.5 | -76 | -70 | -64 |

**Table 26: Typical RSSI Value in dBm at CS Threshold with Default MAGN_TARGET at 2.4 kBaud**

| | | MAX_DVGA_GAIN[1:0] | | | |
|---|---|---|---|---|---|
| | | 00 | 01 | 10 | 11 |
| MAX_LNA_GAIN[2:0] | 000 | -96 | -90 | -84 | -78.5 |
| | 001 | -94.5 | -89 | -83 | -77.5 |
| | 010 | -92.5 | -87 | -81 | -75 |
| | 011 | -91 | -85 | -78.5 | -73 |
| | 100 | -87.5 | -82 | -76 | -70 |
| | 101 | -85 | -79.5 | -73.5 | -67.5 |
| | 110 | -83 | -76.5 | -70.5 | -65 |
| | 111 | -78 | -72 | -66 | -60 |

**Table 27: Typical RSSI Value in dBm at CS Threshold with Default MAGN_TARGET at 250 kBaud**

If the threshold is set high, i.e. only strong signals are wanted, the threshold should be adjusted upwards by first reducing the MAX_LNA_GAIN value and then the MAX_DVGA_GAIN value. This will reduce power consumption in the receiver front end, since the highest gain settings are avoided.

### *17.4.2 CS Relative Threshold*

The relative threshold detects sudden changes in the measured signal level. This setting is not dependent on the absolute signal level and is thus useful to detect signals in environments with a time varying noise floor. The register field AGCCTRL1.CARRIER_SENSE_REL_THR is used to enable/disable relative CS, and to select threshold of 6 dB, 10 dB or 14 dB RSSI change

### 17.5 Clear Channel Assessment (CCA)

The Clear Channel Assessment CCA) is used to indicate if the current channel is free or busy. The current CCA state is viewable on any of the GDO pins by setting IOCFGx.GDOx_CFG=0x09.

MCSM1.CCA_MODE selects the mode to use when determining CCA.

When the STX or SFSTXON command strobe is given while CC2500 is in the RX state, the TX or FSTXON state is only entered if the clear channel requirements are fulfilled. The chip will otherwise remain in RX (if the channel becomes available, the radio will not enter TX or FSTXON state before a new strobe command is sent on the SPI interface). This feature is called TX-if-CCA. Four CCA requirements can be programmed: Four CCA requirements can be programmed:

- Always (CCA disabled, always goes to TX)
- If RSSI is below threshold
- Unless currently receiving a packet
- Both the above (RSSI below threshold and not currently receiving a packet)

### 17.6 Link Quality Indicator (LQI)

The Link Quality Indicator is a metric of the current quality of the received signal. If PKTCTRL1.APPEND_STATUS is enabled, the value is automatically added to the last byte appended after the payload. The value can also be read from the LQI status register. The LQI gives an estimate of how easily a received signal can be demodulated by accumulating the magnitude of the error between ideal constellations and the received signal over the 64 symbols immediately following the sync word. LQI is best used as a relative measurement of the link quality (a high value indicates a better link than what a low value does), since the value is dependent on the modulation format.

## 18 Forward Error Correction with Interleaving

### 18.1 Forward Error Correction (FEC)

CC2500 has built in support for Forward Error Correction (FEC). To enable this option, set MDMCFG1.FEC_EN to 1. FEC is only supported in fixed packet length mode (PKTCTRL0.LENGTH_CONFIG=0). FEC is employed on the data field and CRC word in order to reduce the gross bit error rate when operating near the sensitivity limit. Redundancy is added to the transmitted data in such a way that the receiver can restore the original data in the presence of some bit errors.

The use of FEC allows correct reception at a lower SNR, thus extending communication range. Alternatively, for a given SNR, using FEC decreases the bit error rate (BER). As the packet error rate (PER) is related to BER by:

$$PER = 1 - (1 - BER)^{packet_length}$$

a lower BER can be used to allow longer packets, or a higher percentage of packets of a given length, to be transmitted successfully. Finally, in realistic ISM radio environments, transient and time-varying phenomena will produce occasional errors even in otherwise good reception conditions. FEC will mask such errors and, combined with interleaving of the coded data, even correct relatively long periods of faulty reception (burst errors).

The FEC scheme adopted for CC2500 is convolutional coding, in which *n* bits are generated based on *k* input bits and the *m* most recent input bits, forming a code stream able to withstand a certain number of bit errors between each coding state (the *m*-bit window).

The convolutional coder is a rate 1/2 code with a constraint length of m=4. The coder codes one input bit and produces two output bits; hence, the effective data rate is halved. I.e. to transmit at the same effective data rate when using FEC, it is necessary to use twice as high over-the-air data rate. This will require a higher receiver bandwidth, and thus reduce sensitivity. In other words, the improved reception by using FEC and the degraded sensitivity from a higher receiver bandwidth will be counteracting factors.

### 18.2 Interleaving

Data received through radio channels will often experience burst errors due to

interference and time-varying signal strengths. In order to increase the robustness to errors spanning multiple bits, interleaving is used when FEC is enabled. After de-interleaving, a continuous span of errors in the received stream will become single errors spread apart.

**CC2500** employs matrix interleaving, which is illustrated in Figure 14. The on-chip interleaving and de-interleaving buffers are 4 x 4 matrices. In the transmitter, the data bits from the rate ½ convolutional coder are written into the rows of the matrix, whereas the bit sequence to be transmitted is read from the columns of the matrix. Conversely, in the receiver, the received symbols are written into the rows of the matrix, whereas the data passed onto the convolutional decoder is read from the columns of the matrix.

When FEC and interleaving is used at least one extra byte is required for trellis termination. In addition, the amount of data transmitted over the air must be a multiple of the size of the interleaver buffer (two bytes). The packet control hardware therefore automatically inserts one or two extra bytes at the end of the packet, so that the total length of the data to be interleaved is an even number. Note that these extra bytes are invisible to the user, as they are removed before the received packet enters the RX FIFO.

When FEC and interleaving is used the minimum data payload is 2 bytes.

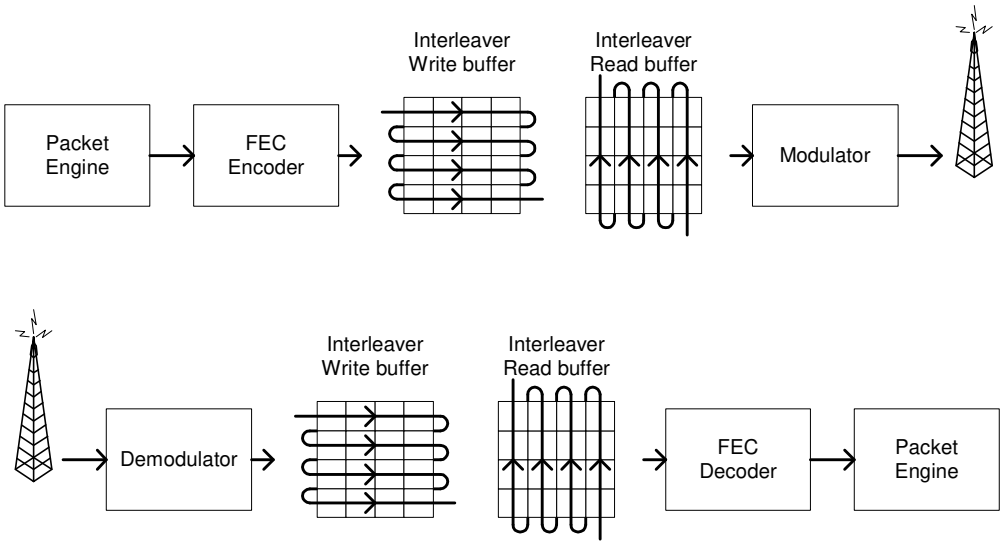


**Figure 14: General Principle of Matrix Interleaving**

# 19 Radio Control

**Figure 15: Complete Radio Control State Diagram**

***CC2500*** has a built-in state machine that is used to switch between different operation states (modes). The change of state is done either by using command strobes or by internal events such as TX FIFO underflow.

A simplified state diagram, together with typical usage and current consumption, is shown in Figure 5 on page 15. The complete radio control state diagram is shown in Figure 15. The numbers refer to the state number readable in the `MARCSTATE` status register. This register is primarily for test purposes.

## 19.1 Power-On Start-Up Sequence

When the power supply is turned on, the system must be reset. One of the following two sequences must be followed: Automatic power-on reset (POR) or manual reset.

### 19.1.1 Automatic POR

A power-on reset circuit is included in the **CC2500**. The minimum requirements stated in Section 4.9 must be followed for the power-on reset to function properly. The internal power-up sequence is completed when CHIP_RDYn goes low. CHIP_RDYn is observed on the SO pin after CSn is pulled low. See Section 10.1 for more details on CHIP_RDYn.

When the **CC2500** reset is completed the chip will be in the IDLE state and the crystal oscillator will be running. If the chip has had sufficient time for the crystal oscillator to stabilize after the power-on-reset, the SO pin will go low immediately after taking CSn low. If CSn is taken low before reset is completed the SO pin will first go high, indicating that the crystal oscillator is not stabilized, before going low as shown in Figure 16.

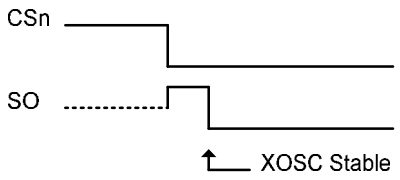


**Figure 16: Power-On Reset**

### 19.1.2 Manual Reset

The other global reset possibility on **CC2500** is the SRES command strobe. By issuing this strobe, all internal registers and states are set to the default, IDLE state. The manual power-up sequence is as follows (see Figure 17):

- Set SCLK=1 and SI=0, to avoid potential problems with pin control mode (see Section 11.3 on page 26).
- Strobe CSn low / high.
- Hold CSn high for at least 40 µs relative to pulling CSn low
- Pull CSn low and wait for SO to go low (CHIP_RDYn).
- Issue the SRES strobe on the SI line.
- When SO goes low again, reset is complete and the chip is in the IDLE state.

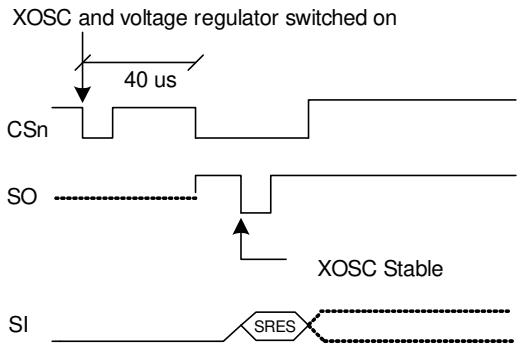


**Figure 17: Power-On Reset with SRES**

Note that the above reset procedure is only required just after the power supply is first turned on. If the user wants to reset the **CC2500** after this, it is only necessary to issue an SRES command strobe.

## 19.2 Crystal Control

The crystal oscillator (XOSC) is either automatically controlled or always on, if MCSM0.XOSC_FORCE_ON is set.

In the automatic mode, the XOSC will be turned off if the SXOFF or SPWD command strobes are issued; the state machine then goes to XOFF or SLEEP respectively. This can only be done from the IDLE state. The XOSC will be turned off when CSn is released (goes high). The XOSC will be automatically turned on again when CSn goes low. The state machine will then go to the IDLE state. The SO pin on the SPI interface must be pulled low before the SPI interface is ready to be used; as described in Section 10.1 on page 22.

If the XOSC is forced on, the crystal will always stay on even in the SLEEP state.

Crystal oscillator start-up time depends on crystal ESR and load capacitances. The electrical specification for the crystal oscillator can be found in Section 4.4 on page 12.

## 19.3 Voltage Regulator Control

The voltage regulator to the digital core is controlled by the radio controller. When the chip enters the SLEEP state, which is the state with the lowest current consumption, the voltage regulator is disabled. This occurs after CSn is released when a SPWD command strobe has been sent on the SPI interface. The chip is now in the SLEEP state. Setting CSn low again will turn on the regulator and crystal

oscillator and make the chip enter the IDLE state.

When wake on radio is enabled, the WOR module will control the voltage regulator as described in Section 19.5.

### 19.4 Active Modes

CC2500 has two active modes: receive and transmit. These modes are activated directly by the MCU by using the SRX and STX command strobes, or automatically by Wake on Radio.

The frequency synthesizer must be calibrated regularly. CC2500 has one manual calibration option (using the SCAL strobe), and three automatic calibration options, controlled by the MCSM0.FS_AUTOCAL setting:

- Calibrate when going from IDLE to either RX or TX (or FSTXON)
- Calibrate when going from either RX or TX to IDLE automatically
- Calibrate every fourth time when going from either RX or TX to IDLE automatically

If the radio goes from TX or RX to IDLE by issuing an SIDLE strobe, calibration will not be performed. The calibration takes a constant number of XOSC cycles (see Table 28 for timing details).

When RX is activated, the chip will remain in receive mode until a packet is successfully received or the RX termination timer expires (see Section 19.7). Note: the probability that a false sync word is detected can be reduced by using PQT, CS, maximum sync word length and sync word qualifier mode as describe in Section 17. After a packet is successfully received the radio controller will then go to the state indicated by the MCSM1.RXOFF_MODE setting. The possible destinations are:

- IDLE
- FSTXON: Frequency synthesizer on and ready at the TX frequency. Activate TX with STX.
- TX: Start sending preambles
- RX: Start search for a new packet

Similarly, when TX is active the chip will remain in the TX state until the current packet has been successfully transmitted. Then the state will change as indicated by the MCSM1.TXOFF_MODE setting. The possible destinations are the same as for RX.

The MCU can manually change the state from RX to TX and vice versa by using the command strobes. If the radio controller is currently in transmit and the SRX strobe is used, the current transmission will be ended and the transition to RX will be done.

If the radio controller is in RX when the STX or SFSTXON command strobes are used, the TX-if-CCA function will be used. If the channel is not clear, the chip will remain in RX. The MCSM1.CCA_MODE setting controls the conditions for clear channel assessment. See Section 17.5 on page 37 for details.

The SIDLE command strobe can always be used to force the radio controller to go to the IDLE state.

### 19.5 Wake On Radio (WOR)

The optional Wake on Radio (WOR) functionality enables CC2500 to periodically wake up from SLEEP and listen for incoming packets without MCU interaction.

When the SWOR strobe command is sent on the SPI interface, the CC2500 will go to the SLEEP state when CSn is released. The RC oscillator must be enabled before the WOR strobe can be used, as it is the clock source for the WOR timer. The on-chip timer will set CC2500 into the IDLE state and then the RX state. After a programmable time in RX, the chip goes back to the SLEEP state, unless a packet is received. See Figure 18 and Section 19.7 for details on how the timeout works.

Set the CC2500 into the IDLE state to exit WOR mode.

CC2500 can be set up to signal the MCU that a packet has been received by using the GDO pins. If a packet is received, the MCSM1.RXOFF_MODE will determine the behaviour at the end of the received packet. When the MCU has read the packet, it can put the chip back into SLEEP with the SWOR strobe from the IDLE state. The FIFO will lose its contents in the SLEEP state.

The WOR timer has two events, Event 0 and Event 1. In the SLEEP state with WOR activated, reaching Event 0 will turn on the digital regulator and start the crystal oscillator.

Event 1 follows Event 0 after a programmed timeout.

The time between two consecutive Event 0 is programmed with a mantissa value given by `WOREVT1.EVENT0` and `WOREVT0.EVENT0`, and an exponent value set by `WORCTRL.WOR_RES`. The equation is:

$$t_{Event0} = \frac{750}{f_{XOSC}} \cdot EVENT0 \cdot 2^{5 \cdot WOR_RES}$$

The Event 1 timeout is programmed with `WORCTRL.EVENT1`. Figure 18 shows the timing relationship between Event 0 timeout and Event 1 timeout.

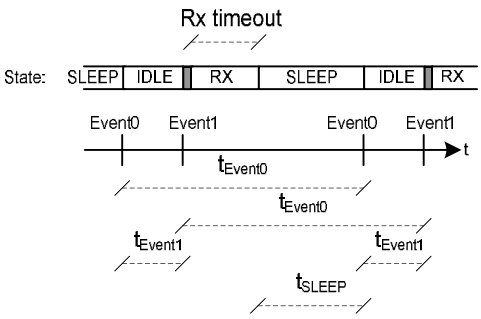


**Figure 18: Event 0 and Event 1 Relationship**

The time from the ***CC2500*** enters SLEEP state until the next Event 0 is programmed to appear ($t_{SLEEP}$ in Figure 18) should be larger than 11.08 ms when using a 26 MHz crystal and 10.67 ms when a 27 MHz crystal is used. If $t_{SLEEP}$ is less than 11.08 (10.67) ms there is a chance that the consecutive Event 0 will occur

$$\frac{750}{f_{XOSC}} \cdot 128 \text{ seconds}$$

too early. Application Note AN047 [3] explains in detail the theory of operation and the different registers involved when using WOR, as well as highlighting important aspects when using WOR mode.

### *19.5.1 RC Oscillator and Timing*

The frequency of the low-power RC oscillator used for the WOR functionality varies with temperature and supply voltage. In order to keep the frequency as accurate as possible, the RC oscillator will be calibrated whenever possible, which is when the XOSC is running and the chip is not in the SLEEP state. When the power and XOSC is enabled, the clock used by the WOR timer is a divided XOSC clock. When the chip goes to the SLEEP state, the RC oscillator will use the last valid calibration result. The frequency of the RC oscillator is locked to the main crystal frequency divided by 750.

In applications where the radio wakes up very often, typically several times every second, it is possible to do the RC oscillator calibration once and then turn off calibration (`WORCTRL.RC_CAL`=0) to reduce the current consumption. This requires that RC oscillator calibration values are read from registers `RCCTRL0_STATUS` and `RCCTRL1_STATUS` and written back to `RCCTRL0` and `RCCTRL0` respectively. If the RC oscillator calibration is turned off it will have to be manually turned on again if temperature and supply voltage changes.

Refer to Application Note AN047 [3] for further details.

## 19.6 Timing

The radio controller controls most timing in ***CC2500***, such as synthesizer calibration, PLL lock time and RX/TX turnaround times. Timing from IDLE to RX and IDLE to TX is constant, dependent on the auto calibration setting. RX/TX and TX/RX turnaround times are constant. The calibration time is constant 18739 clock periods. Table 28 shows timing in crystal clock cycles for key state transitions.

Power on time and XOSC start-up times are variable, but within the limits stated in Table 7.

Note that in a frequency hopping spread spectrum or a multi-channel protocol the calibration time can be reduced from 721 µs to approximately 150 µs. This is explained in Section 31.2.

| Description | XOSC Periods | 26 MHz Crystal |
|---|---|---|
| IDLE to RX, no calibration | 2298 | 88.4 µs |
| IDLE to RX, with calibration | ~21037 | 809 µs |
| IDLE to TX/FSTXON, no calibration | 2298 | 88.4 µs |
| IDLE to TX/FSTXON, with calibration | ~21037 | 809 µs |
| TX to RX switch | 560 | 21.5 µs |
| RX to TX switch | 250 | 9.6 µs |
| RX or TX to IDLE, no calibration | 2 | 0.1 µs |
| RX or TX to IDLE, with calibration | ~18739 | 721 µs |
| Manual calibration | ~18739 | 721 µs |

**Table 28: State Transition Timing**

### 19.7 RX Termination Timer

CC2500 has optional functions for automatic termination of RX after a programmable time. The main use for this functionality is wake-on-radio (WOR), but it may be useful for other applications. The termination timer starts when in RX state. The timeout is programmable with the MCSM2.RX_TIME setting. When the timer expires, the radio controller will check the condition for staying in RX; if the condition is not met, RX will terminate.

The programmable conditions are:

- MCSM2.RX_TIME_QUAL=0: Continue receive if sync word has been found
- MCSM2.RX_TIME_QUAL=1: Continue receive if sync word has been found or preamble quality is above threshold (PQT)

If the system can expect the transmission to have started when enabling the receiver, the MCSM2.RX_TIME_RSSI function can be used. The radio controller will then terminate RX if the first valid carrier sense sample indicates no carrier (RSSI below threshold). See Section 17.4 on page 35 for details on Carrier Sense.

For OOK modulation, lack of carrier sense is only considered valid after eight symbol periods. Thus, the MCSM2.RX_TIME_RSSI function can be used in OOK mode when the distance between “1” symbols is 8 or less.

If RX terminates due to no carrier sense when the MCSM2.RX_TIME_RSSI function is used, or if no sync word was found when using the MCSM2.RX_TIME timeout function, the chip will always go back to IDLE if WOR is disabled and back to SLEEP if WOR is enabled. Otherwise, the MCSM1.RXOFF_MODE setting determines the state to go to when RX ends. This means that the chip will not automatically go back to SLEEP once a sync word has been received. It is therefore recommended to always wake up the microcontroller on sync word detection when using WOR mode. This can be done by selecting output signal 6 (see Table 33 on page 53) on one of the programmable GDO output pins, and programming the microcontroller to wake up on an edge-triggered interrupt from this GDO pin.

## 20 Data FIFO

The CC2500 contains two 64 byte FIFOs, one for received data and one for data to be transmitted. The SPI interface is used to read from the RX FIFO and write to the TX FIFO. Section 10.5 contains details on the SPI FIFO access. The FIFO controller will detect overflow in the RX FIFO and underflow in the TX FIFO.

When writing to the TX FIFO it is the responsibility of the MCU to avoid TX FIFO overflow. A TX FIFO overflow will result in an error in the TX FIFO content.

Likewise, when reading the RX FIFO the MCU must avoid reading the RX FIFO past its empty value, since an RX FIFO underflow will result in an error in the data read out of the RX FIFO.

The chip status byte that is available on the SO pin while transferring the SPI header contains the fill grade of the RX FIFO if the access is a read operation and the fill grade of the TX FIFO if the access is a write operation. Section 10.1 on page 22 contains more details on this.

The number of bytes in the RX FIFO and TX FIFO can also be read from the status registers RXBYTES.NUM_RXBYTES and TXBYTES.NUM_TXBYTES respectively. If a received data byte is written to the RX FIFO at the exact same time as the last byte in the RX FIFO is read over the SPI interface, the RX FIFO pointer is not properly updated and the last read byte is duplicated. To avoid this problem one should never empty the RX FIFO before the last byte of the packet is received.

For packet lengths less than 64 bytes it is recommended to wait until the complete packet has been received before reading it out of the RX FIFO.

If the packet length is larger than 64 bytes the MCU must determine how many bytes can be read from the RX FIFO (RXBYTES.NUM_RXBYTES-1) and the following software routine can be used:

1. Read RXBYTES.NUM_RXBYTES repeatedly at a rate guaranteed to be at least twice that of which RF bytes are received until the same value is returned twice; store value in *n*.
2. If *n* < # of bytes remaining in packet, read *n*-1 bytes from the RX FIFO.
3. Repeat steps 1 and 2 until *n* = # of bytes remaining in the packet.
4. Read the remaining bytes from the RX FIFO.

The 4-bit FIFOTHR.FIFO_THR setting is used to program threshold points in the FIFOs. Table 29 lists the 16 FIFO_THR settings and the corresponding thresholds for the RX and TX FIFOs. The threshold value is coded in opposite directions for the RX FIFO and TX FIFO. This gives equal margin to the overflow and underflow conditions when the threshold is reached.

A signal will assert when the number of bytes in the FIFO is equal to or higher than the programmed threshold. The signal can be viewed on the GDO pins (see Section 28 on page 51).

Figure 20 shows the number of bytes in both the RX FIFO and TX FIFO when the threshold flag toggles, in the case of FIFO_THR=13. Figure 19 shows the signal as the respective FIFO is filled above the threshold, and then drained below.

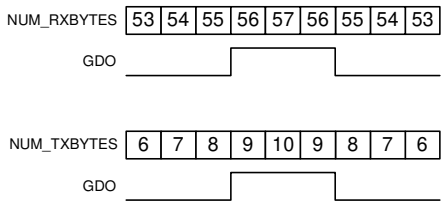


**Figure 19: FIFO_THR=13 vs. Number of Bytes in FIFO (GDOx_CFG=0x00 in RX and GDOx_CFG=0x02 in TX)**

| FIFO_THR | Bytes in TX FIFO | Bytes in RX FIFO |
|---|---|---|
| 0 (0000) | 61 | 4 |
| 1 (0001) | 57 | 8 |
| 2 (0010) | 53 | 12 |
| 3 (0011) | 49 | 16 |
| 4 (0100) | 45 | 20 |
| 5 (0101) | 41 | 24 |
| 6 (0110) | 37 | 28 |
| 7 (0111) | 33 | 32 |
| 8 (1000) | 29 | 36 |
| 9 (1001) | 25 | 40 |
| 10 (1010) | 21 | 44 |
| 11 (1011) | 17 | 48 |
| 12 (1100) | 13 | 52 |
| 13 (1101) | 9 | 56 |
| 14 (1110) | 5 | 60 |
| 15 (1111) | 1 | 64 |

**Table 29: FIFO_THR Settings and the Corresponding FIFO Thresholds**

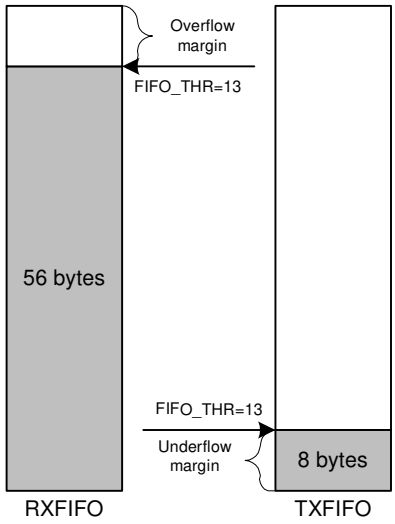


**Figure 20: Example of FIFOs at Threshold**

## 21 Frequency Programming

The frequency programming in CC2500 is designed to minimize the programming needed in a channel-oriented system.

To set up a system with channel numbers, the desired channel spacing is programmed with the MDMCFG0.CHANSPC_M and MDMCFG1.CHANSPC_E registers. The channel spacing registers are mantissa and exponent respectively.

The base or start frequency is set by the 24 bit frequency word located in the FREQ2, FREQ1 and FREQ0 registers. This word will typically

be set to the centre of the lowest channel frequency that is to be used.

The desired channel number is programmed with the 8-bit channel number register, CHANNR.CHAN, which is multiplied by the channel offset. The resultant carrier frequency is given by:

$$f_{carrier} = \frac{f_{XOSC}}{2^{16}} \cdot \left(FREQ + CHAN \cdot \left(\left(256 + CHANSPC_M\right) \cdot 2^{CHANSPC_E-2}\right)\right)$$

With a 26 MHz crystal the maximum channel spacing is 405 kHz. To get e.g. 1 MHz channel spacing one solution is to use 333 kHz channel spacing and select each third channel in CHANNR.CHAN.

The preferred IF frequency is programmed with the FSCTRL1.FREQ_IF register. The IF frequency is given by:

$$f_{IF} = \frac{f_{XOSC}}{2^{10}} \cdot FREQ_IF$$

Note that the SmartRF® Studio software [5] automatically calculates the optimum FSCTRL1.FREQ_IF register setting based on channel spacing and channel filter bandwidth.

If any frequency programming register is altered when the frequency synthesizer is running, the synthesizer may give an undesired response. Hence, the frequency programming should only be updated when the radio is in the IDLE state.

## 22 VCO

The VCO is completely integrated on-chip.

### 22.1 VCO and PLL Self-Calibration

The VCO characteristics will vary with temperature and supply voltage changes, as well as the desired operating frequency. In order to ensure reliable operation, **CC2500** includes frequency synthesizer self-calibration circuitry. This calibration should be done regularly, and must be performed after turning on power and before using a new frequency (or channel). The number of XOSC cycles for completing the PLL calibration is given in Table 28 on page 42.

The calibration can be initiated automatically or manually. The synthesizer can be automatically calibrated each time the synthesizer is turned on, or each time the synthesizer is turned off automatically. This is configured with the MCSM0.FS_AUTOCAL register setting. In manual mode, the calibration is initiated when the SCAL command strobe is activated in the IDLE mode.

Note that the calibration values are maintained in SLEEP mode, so the calibration is still valid after waking up from SLEEP mode (unless supply voltage or temperature has changed significantly).

To check that the PLL is in lock the user can program register IOCFGx.GDOx_CFG to 0x0A and use the lock detector output available on the GDOx pin as an interrupt for the MCU (x = 0,1 or 2). A positive transition on the GDOx pin means that the PLL is in lock. As an alternative the user can read register FSCAL1. The PLL is in lock if the register content is different from 0x3F. Refer also to the **CC2500** Errata Notes [1]. For more robust operation the source code could include a check so that the PLL is re-calibrated until PLL lock is achieved if the PLL does not lock the first time.

## 23 Voltage Regulators

CC2500 contains several on-chip linear voltage regulators, which generate the supply voltage needed by low-voltage modules. These voltage regulators are invisible to the user, and can be viewed as integral parts of the various modules. The user must however make sure that the absolute maximum ratings and required pin voltages in Table 1 and Table 13 are not exceeded. The voltage regulator for the digital core requires one external decoupling capacitor.

Setting the CSn pin low turns on the voltage regulator to the digital core and starts the crystal oscillator. The SO pin on the SPI interface must go low before the first positive edge of SCLK (setup time is given in Table 16).

If the chip is programmed to enter power-down mode, (SPWD strobe issued), the power will be turned off after CSn goes high. The power and crystal oscillator will be turned on again when CSn goes low.

The voltage regulator output should only be used for driving the CC2500.

## 24 Output Power Programming

The RF output power level from the device has two levels of programmability, as illustrated in Figure 21.

The RF output power level from the device is programmed through the PATABLE register.

- If 2-FSK, GFSK or MSK modulation is used the desired output power is programmed to index 0 in the PATABLE register (PATABLE(0)[7:0]). The 3-bit FREND0.PA_POWER value shall be set to 0 (reset default value).
- If OOK modulation is used the desired output power for the logic 0 and logic 1 power levels are programmed to index 0 and index 1 in the PATABLE register respectively (PATABLE(0)[7:0] and PATABLE(1)[7:0]). The 3-bit FREND0.PA_POWER value shall be set to 1.

Table 31 contains recommended PATABLE settings for various output levels and frequency bands. See Section 10.6 on page 24 for PATABLE programming details. The SmartRF® Studio software [5] should be used to obtain optimum PATABLE settings for various output powers.

PATABLE must be programmed in burst mode if writing to other entries than PATABLE(0) (OOK modulation). Note that all content of the PATABLE, except for the first byte (index 0) is lost when entering the SLEEP state.

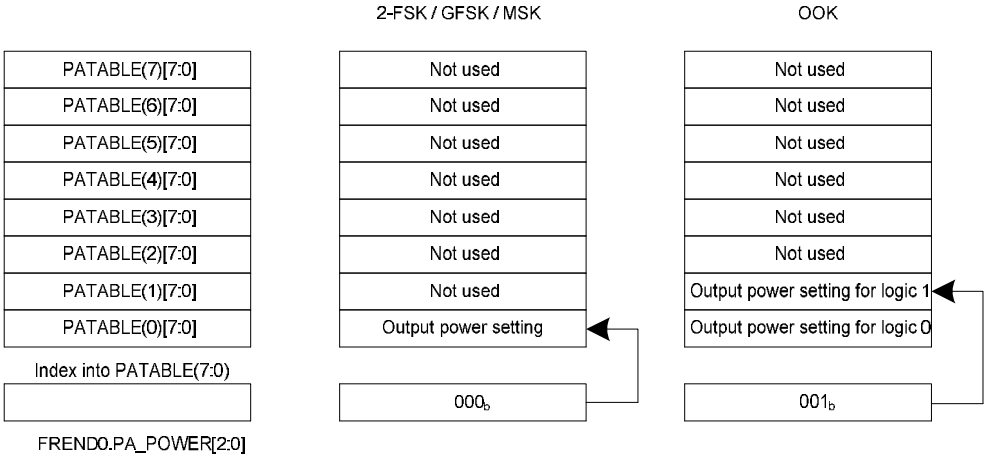


**Figure 21: PA_POWER and PATABLE**

| Default power setting | Output power, typical [dBm] | Current consumption, typical [mA] |
|---|---|---|
| 0xC6 | -12 | 11.1 |

**Table 30: Output Power and Current Consumption for Default PATABLE Setting**

| Output Power, Typical, +25°C, 3.0 V [dBm] | PATABLE Value | Current Consumption, Typical [mA] |
|---|---|---|
| (–55 or less) | 0x00 | 8.4 |
| –30 | 0x50 | 9.9 |
| –28 | 0x44 | 9.7 |
| –26 | 0xC0 | 10.2 |
| –24 | 0x84 | 10.1 |
| –22 | 0x81 | 10.0 |
| –20 | 0x46 | 10.1 |
| –18 | 0x93 | 11.7 |
| –16 | 0x55 | 10.8 |
| –14 | 0x8D | 12.2 |
| –12 | 0xC6 | 11.1 |
| –10 | 0x97 | 12.2 |
| –8 | 0x6E | 14.1 |
| –6 | 0x7F | 15.0 |
| –4 | 0xA9 | 16.2 |
| –2 | 0xBB | 17.7 |
| 0 | 0xFE | 21.2 |
| +1 | 0xFF | 21.5 |

**Table 31: Optimum PATABLE Settings for Various Output Power Levels**

## 25 Selectivity

Figure 22 to Figure 26 show the typical selectivity performance (adjacent and alternate rejection).

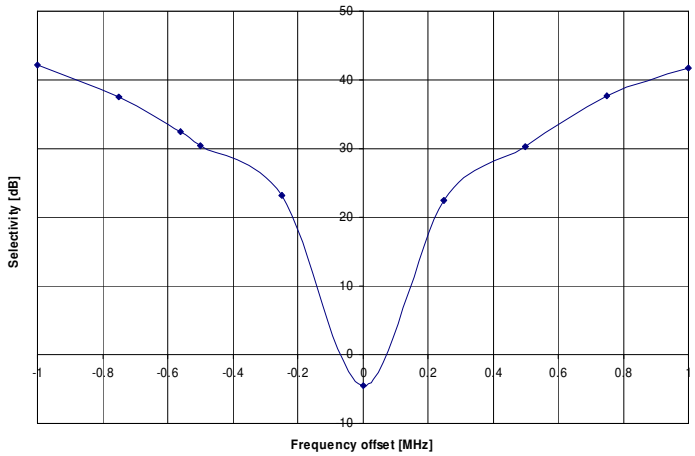


**Figure 22: Typical Selectivity at 2.4 kBaud. IF Frequency is 273.9 kHz.**
**`MDMCFG2.DEM_DCFILT_OFF=1`**

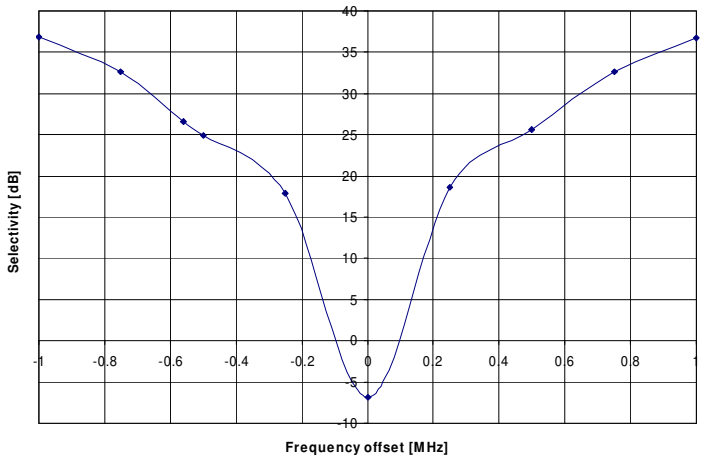


**Figure 23: Typical Selectivity at 10 kBaud. IF Frequency is 273.9 kHz.**
**`MDMCFG2.DEM_DCFILT_OFF=1`**

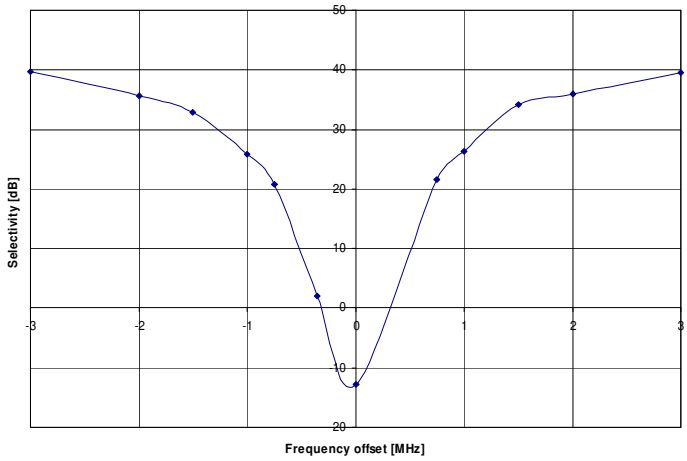


**Figure 24: Typical Selectivity at 250 kBaud. IF Frequency is 177.7 kHz.**
**`MDMCFG2.DEM_DCFILT_OFF=0`**

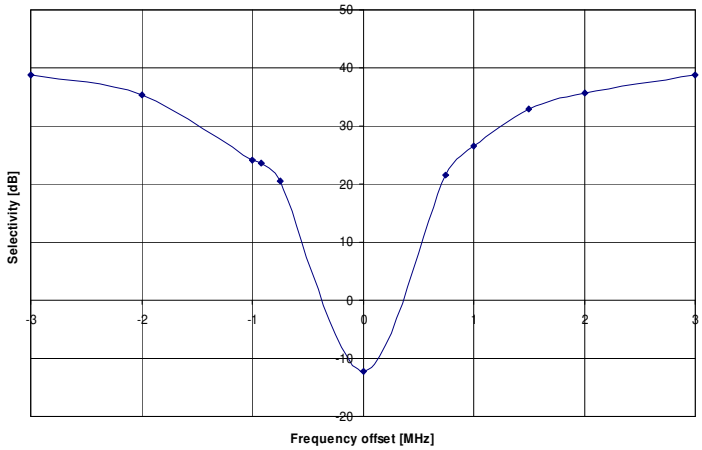


**Figure 25: Typical Selectivity at 250 kBaud. IF Frequency is 457 kHz.**
**`MDMCFG2.DEM_DCFILT_OFF=1`**

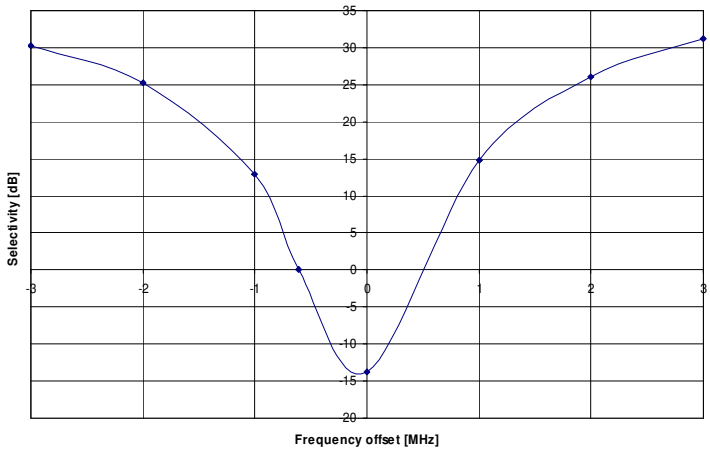


**Figure 26: Typical Selectivity at 500 kBaud. IF Frequency is 304.7 kHz.**
**`MDMCFG2.DEM_DCFILT_OFF=0`**

## 26 Crystal Oscillator

A crystal in the frequency range 26-27 MHz must be connected between the XOSC_Q1 and XOSC_Q2 pins. The oscillator is designed for parallel mode operation of the crystal. In addition, loading capacitors (C81 and C101) for the crystal are required. The loading capacitor values depend on the total load capacitance, $C_L$, specified for the crystal. The total load capacitance seen between the crystal terminals should equal $C_L$ for the crystal to oscillate at the specified frequency.

$$C_L = \frac{1}{\frac{1}{C_{81}} + \frac{1}{C_{101}}} + C_{parasitic}$$

The parasitic capacitance is constituted by pin input capacitance and PCB stray capacitance. Total parasitic capacitance is typically 2.5 pF.

The crystal oscillator circuit is shown in Figure 27. Typical component values for different values of $C_L$ are given in Table 32.

The crystal oscillator is amplitude regulated. This means that a high current is used to start up the oscillations. When the amplitude builds up, the current is reduced to what is necessary to maintain approximately 0.4 Vpp signal swing. This ensures a fast start-up, and keeps the drive level to a minimum. The ESR of the crystal should be within the specification in order to ensure a reliable start-up (see Section 4.4 on page 12).

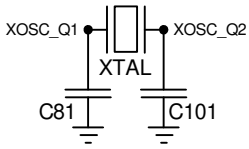


**Figure 27: Crystal Oscillator Circuit**

| Component | $C_L$= 10 pF | $C_L$=13 Pf | $C_L$=16 pF |
|---|---|---|---|
| C81 | 15 pF | 22 pF | 27 pF |
| C101 | 15 pF | 22 pF | 27 pF |

**Table 32: Crystal Oscillator Component Values**

### 26.1 Reference Signal

The chip can alternatively be operated with a reference signal from 26 to 27 MHz instead of a crystal. This input clock can either be a full-swing digital signal (0 V to VDD) or a sine wave of maximum 1 V peak-peak amplitude. The reference signal must be connected to the XOSC_Q1 input. The sine wave must be connected to XOSC_Q1 using a serial capacitor. When using a full-swing digital signal this capacitor can be omitted. The XOSC_Q2 line must be left un-connected. C81 and C101 can be omitted when using a reference signal.

## 27 External RF Match

The balanced RF input and output of CC2500 share two common pins and are designed for a simple, low-cost matching and balun network on the printed circuit board. The receive- and transmit switching at the CC2500 front-end is controlled by a dedicated on-chip function, eliminating the need for an external RX/TX-switch.

A few passive external components combined with the internal RX/TX switch/termination circuitry ensures match in both RX and TX mode.

Although CC2500 has a balanced RF input/output, the chip can be connected to a single-ended antenna with few external low cost capacitors and inductors.

The passive matching/filtering network connected to CC2500 should have the following differential impedance as seen from the RF-port (RF_P and RF_N) towards the antenna:

$$Z_{out} = 80 + j74\ \Omega$$

To ensure optimal matching of the CC2500 differential output it is highly recommended to follow the CC2500EM reference designs [4] as closely as possible. Gerber files for the reference designs are available for download from the TI website.

## 28 PCB Layout Recommendations

The top layer should be used for signal routing, and the open areas should be filled with metallization connected to ground using several vias.

The area under the chip is used for grounding and shall be connected to the bottom ground plane with several vias for good thermal performance and sufficiently low inductance to ground. In the CC2500EM reference designs [4] 5 vias are placed inside the exposed die attached pad. These vias should be “tented” (covered with solder mask) on the component side of the PCB to avoid migration of solder through the vias during the solder reflow process.

The solder paste coverage should not be 100%. If it is, out gassing may occur during the reflow process, which may cause defects (splattering, solder balling). Using “tented” vias reduces the solder paste coverage below 100%.

See Figure 28 for top solder resist and top paste masks. See Figure 30 for recommended PCB layout for QLP 20 package.

Each decoupling capacitor should be placed as close as possible to the supply pin it is supposed to decouple. Each decoupling capacitor should be connected to the power line by separate vias. The best routing is from the power line to the decoupling capacitor and then to the CC2500 supply pin. Supply power filtering is very important.

Each decoupling capacitor ground pad should be connected to the ground plane using a separate via. Direct connections between neighboring power pins will increase noise coupling and should be avoided unless absolutely necessary.

The external components should ideally be as small as possible (0402 is recommended) and surface mount devices are highly recommended. Please note that components smaller than those specified may have differing characteristics.

Precaution should be used when placing the microcontroller in order to avoid noise interfering with the RF circuitry.

A CC2500/2550DK Development Kit with a fully assembled CC2500EM Evaluation Module is available. It is strongly advised that this reference layout is followed very closely in order to get the best performance. The schematic, BOM and layout Gerber files are all available from the TI website [4].

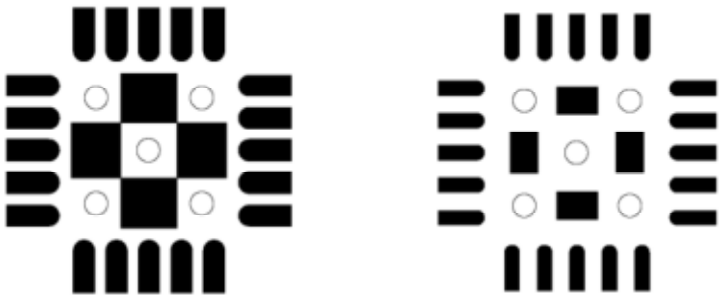

**Figure 28: Left: Top Solder Resist Mask (negative). Right: Top Paste Mask. Circles are Vias.**

## 29 General Purpose / Test Output Control Pins

The three digital output pins GDO0, GDO1 and GDO2 are general control pins configured with IOCFG0.GDO0_CFG, IOCFG1.GDO1_CFG and IOCFG2.GDO2_CFG respectively. Table 33 shows the different signals that can be monitored on the GDO pins. These signals can be used as inputs to the MCU. GDO1 is the same pin as the SO pin on the SPI interface, thus the output programmed on this pin will only be valid when CSn is high. The default value for GDO1 is 3-stated, which is useful when the SPI interface is shared with other devices.

The default value for GDO0 is a 135-141 kHz clock output (XOSC frequency divided by 192). Since the XOSC is turned on at power-on-reset, this can be used to clock the MCU in systems with only one crystal. When the MCU is up and running, it can change the clock frequency by writing to IOCFG0.GDO0_CFG.

An on-chip analog temperature sensor is enabled by writing the value 128 (0x80) to the IOCFG0.GDO0_CFG register. The voltage on the GDO0 pin is then proportional to temperature. See Section 4.7 on page 14 for temperature sensor specifications.

If the IOCFGx.GDO0_CFG setting is less than 0x20 and IOCFGx_GDOx_INV is 0 (1), the GDO0 and GDO2 pins will be hardwired to 0 (1) and the GDO1 pin will be hardwired to 1 (0) in the SLEEP state. These signals will be hardwired until the CHIP_RDYn signal goes low.

If the IOCFGx.GDO0_CFG setting is 0x20 or higher the GDO pins will work as programmed also in SLEEP state. As an example, GDO1 is high impedance in all states if IOCFG1.GDO0_CFG=0x2E.

| GDOx_CFG[5:0]] | Description |
|---|---|
| 0 (0x00) | Associated to the RX FIFO: Asserts when RX FIFO is filled at or above the RX FIFO threshold. De-asserts when RX FIFO is drained below the same threshold. |
| 1 (0x01) | Associated to the RX FIFO: Asserts when RX FIFO is filled at or above the RX FIFO threshold or the end of packet is reached. De-asserts when the RX FIFO is empty. |
| 2 (0x02) | Associated to the TX FIFO: Asserts when the TX FIFO is filled at or above the TX FIFO threshold. De-asserts when the TX FIFO is below the same threshold. |
| 3 (0x03) | Associated to the TX FIFO: Asserts when TX FIFO is full. De-asserts when the TX FIFO is drained below theTX FIFO threshold. |
| 4 (0x04) | Asserts when the RX FIFO has overflowed. De-asserts when the FIFO has been flushed. |
| 5 (0x05) | Asserts when the TX FIFO has underflowed. De-asserts when the FIFO is flushed. |
| 6 (0x06) | Asserts when sync word has been sent / received, and de-asserts at the end of the packet. In RX, the pin will de-assert when the optional address check fails or the RX FIFO overflows. In TX the pin will de-assert if the TX FIFO underflows. |
| 7 (0x07) | Asserts when a packet has been received with CRC OK. De-asserts when the first byte is read from the RX FIFO. Only valid if `PKTCTRL0.CC2400_EN`=1. |
| 8 (0x08) | Preamble Quality Reached. Asserts when the PQI is above the programmed PQT value. |
| 9 (0x09) | Clear channel assessment. High when RSSI level is below threshold (dependent on the current CCA_MODE setting) |
| 10 (0x0A) | Lock detector output. The PLL is in lock if the lock detector output has a positive transition or is constantly logic high. To check for PLL lock the lock detector output should be used as an interrupt for the MCU. |
| 11 (0x0B) | Serial Clock. Synchronous to the data in synchronous serial mode.<br>In RX mode, data is set up on the falling edge by CC2500 when `GDOx_INV`=0.<br>In TX mode, data is sampled by CC2500 on the rising edge of the serial clock when `GDOx_INV`=0. |
| 12 (0x0C) | Serial Synchronous Data Output (DO). Used for synchronous serial mode. |
| 13 (0x0D) | Serial Data Output. Used for asynchronous serial mode. |
| 14 (0x0E) | Carrier sense. High if RSSI level is above threshold. |
| 15 (0x0F) | CRC_OK. The last CRC comparison matched. Cleared when entering/restarting RX mode. Only valid if `PKTCTRL0.CC2400_EN`=1. |
| 16 (0x10)<br>to<br>21 (0x15) | Reserved – used for test. |
| 22 (0x16) | RX_HARD_DATA[1]. Can be used together with RX_SYMBOL_TICK for alternative serial RX output. |
| 23 (0x17) | RX_HARD_DATA[0]. Can be used together with RX_SYMBOL_TICK for alternative serial RX output. |
| 24 (0x18) | Reserved – used for test. |
| 25 (0x19) | Reserved – used for test. |
| 26 (0x1A) | Reserved – used for test. |
| 27 (0x1B) | PA_PD. Note: PA_PD will have the same signal level in SLEEP and TX states. To control an external PA or RX/TX switch in applications where the SLEEP state is used it is recommended to use `GDOx_CFGx`=0x2F instead. |
| 28 (0x1C) | LNA_PD. Note: LNA_PD will have the same signal level in SLEEP and RX states. To control an external LNA or RX/TX switch in applications where the SLEEP state is used it is recommended to use `GDOx_CFGx`=0x2F instead. |
| 29 (0x1D) | RX_SYMBOL_TICK. Can be used together with RX_HARD_DATA for alternative serial RX output. |
| 30 (0x1E)<br>to<br>35 (0x23) | Reserved – used for test. |
| 36 (0x24) | WOR_EVNT0 |
| 37 (0x25) | WOR_EVNT1 |
| 38 (0x26) | Reserved – used for test. |
| 39 (0x27) | CLK_32k |
| 40 (0x28) | Reserved – used for test. |
| 41 (0x29) | CHIP_RDYn |
| 42 (0x2A) | Reserved – used for test. |
| 43 (0x2B) | XOSC_STABLE |
| 44 (0x2C) | Reserved – used for test. |
| 45 (0x2D) | `GDO0_Z_EN_N`. When this output is 0, `GDO0` is configured as input (for serial TX data). |
| 46 (0x2E) | High impedance (3-state) |
| 47 (0x2F) | HW to 0 (HW1 achieved by setting `GDOx_INV`=1). Can be used to control an external LNA/PA or RX/TX switch. |
| 48 (0x30) | CLK_XOSC/1 |
| 49 (0x31) | CLK_XOSC/1.5 |
| 50 (0x32) | CLK_XOSC/2 |
| 51 (0x33) | CLK_XOSC/3 |
| 52 (0x34) | CLK_XOSC/4 |
| 53 (0x35) | CLK_XOSC/6 |
| 54 (0x36) | CLK_XOSC/8 |
| 55 (0x37) | CLK_XOSC/12 |
| 56 (0x38) | CLK_XOSC/16 |
| 57 (0x39) | CLK_XOSC/24 |
| 58 (0x3A) | CLK_XOSC/32 |
| 59 (0x3B) | CLK_XOSC/48 |
| 60 (0x3C) | CLK_XOSC/64 |
| 61 (0x3D) | CLK_XOSC/96 |
| 62 (0x3E) | CLK_XOSC/128 |
| 63 (0x3F) | CLK_XOSC/192 |
| | Note: There are 3 GDO pins, but only one CLK_XOSC/n can be selected as an output at any time. If CLK_XOSC/n is to be monitored on one of the GDO pins, the other two GDO pins must be configured to values less than 0x30. The GDO0 default value is CLK_XOSC/192. |

**Table 33: `GDOx` Signal Selection (x = 0, 1 or 2)**

# 30 Asynchronous and Synchronous Serial Operation

Several features and modes of operation have been included in the CC2500 to provide backward compatibility with previous Chipcon products and other existing RF communication systems. For new systems, it is recommended to use the built-in packet handling features, as they can give more robust communication, significantly offload the microcontroller and simplify software development.

## 30.1 Asynchronous Operation

For backward compatibility with systems already using the asynchronous data transfer from other Chipcon products, asynchronous transfer is also included in CC2500. When asynchronous transfer is enabled, several of the support mechanisms for the MCU that are included in CC2500 will be disabled, such as packet handling hardware, buffering in the FIFO and so on. The asynchronous transfer mode does not allow the use of the data whitener, interleaver, and FEC, and it is not possible to use Manchester encoding.

Note that MSK is not supported for asynchronous transfer.

Setting `PKTCTRL0.PKT_FORMAT` to 3 enables asynchronous serial mode.

In TX, the `GDO0` pin is used for data input (TX data). Data output can be on `GDO0`, `GDO1` or `GDO2`. This is set by the `IOCFG0.GDO0_CFG`, `IOCFG1.GDO1_CFG` and `IOCFG2.GDO2_CFG` fields.

The CC2500 modulator samples the level of the asynchronous input 8 times faster than the programmed data rate. The timing requirement for the asynchronous stream is that the error in the bit period must be less than one eighth of the programmed data rate.

## 30.2 Synchronous Serial Operation

Setting `PKTCTRL0.PKT_FORMAT` to 1 enables synchronous serial mode. In the synchronous serial mode, data is transferred on a two wire serial interface. The CC2500 provides a clock that is used to set up new data on the data input line or sample data on the data output line. Data input (TX data) is the `GDO0` pin. This pin will automatically be configured as an input when TX is active. The data output pin can be any of the `GDO` pins; this is set by the `IOCFG0.GDO0_CFG`, `IOCFG1.GDO1_CFG` and `IOCFG2.GDO2_CFG` fields.

Preamble and sync word insertion/detection may or may not be active, dependent on the sync mode set by the `MDMCFG2.SYNC_MODE`. If preamble and sync word is disabled, all other packet handler features and FEC should also be disabled. The MCU must then handle preamble and sync word insertion and detection in software. If preamble and sync word insertion/detection is left on, all packet handling features and FEC can be used. One exception is that the address filtering feature is unavailable in synchronous serial mode.

When using the packet handling features in synchronous serial mode, the CC2500 will insert and detect the preamble and sync word and the MCU will only provide/get the data payload. This is equivalent to the recommended FIFO operation mode.

# 31 System Considerations and Guidelines

## 31.1 SRD Regulations

International regulations and national laws regulate the use of radio receivers and transmitters. The most important regulations for the 2.4 GHz band are EN 300 440 and EN 300 328 (Europe), FCC CFR47 part 15.247 and 15.249 (USA), and ARIB STD-T66 (Japan). A summary of the most important aspects of these regulations can be found in Application Note AN032 [2].

Please note that compliance with regulations is dependent on complete system performance. It is the customer's responsibility to ensure that the system complies with regulations.

### 31.2 Frequency Hopping and Multi-Channel Systems

The 2.400 – 2.4835 GHz band is shared by many systems both in industrial, office and home environments. It is therefore recommended to use frequency hopping spread spectrum (FHSS) or a multi-channel protocol because the frequency diversity makes the system more robust with respect to interference from other systems operating in the same frequency band. FHSS also combats multipath fading.

**CC2500** is highly suited for FHSS or multi-channel systems due to its agile frequency synthesizer and effective communication interface. Using the packet handling support and data buffering is also beneficial in such systems as these features will significantly offload the host controller.

Charge pump current, VCO current and VCO capacitance array calibration data is required for each frequency when implementing frequency hopping for **CC2500**. There are 3 ways of obtaining the calibration data from the chip:

1) Frequency hopping with calibration for each hop. The PLL calibration time is approximately 720 µs. The blanking interval between each frequency hop is then approximately 810 us.

2) Fast frequency hopping without calibration for each hop can be done by calibrating each frequency at startup and saving the resulting `FSCAL3`, `FSCAL2` and `FSCAL1` register values in MCU memory. Between each frequency hop, the calibration process can then be replaced by writing the `FSCAL3`, `FSCAL2` and `FSCAL1` register values corresponding to the next RF frequency. The PLL turn on time is approximately 90 µs. The blanking interval between each frequency hop is then approximately 90 us. The VCO current calibration result is available in `FSCAL2` and is not dependent on the RF frequency. Neither is the charge pump current calibration result available in `FSCAL3`. The same value can therefore be used for all frequencies.

3) Run calibration on a single frequency at startup. Next write 0 to `FSCAL3[5:4]` to disable the charge pump calibration. After writing to `FSCAL3[5:4]` strobe `SRX` (or `STX`) with `MCSM0.FS_AUTOCAL`=1 for each new frequency hop. That is, VCO current and VCO capacitance calibration is done but not charge pump current calibration. When charge pump current calibration is disabled the calibration time is reduced from approximately 720 µs to approximately 150 µs. The blanking interval between each frequency hop is then approximately 240 us

There is a trade off between blanking time and memory space needed for storing calibration data in non-volatile memory. Solution 2) above gives the shortest blanking interval, but requires more memory space to store calibration values. Solution 3) gives approximately 570 µs smaller blanking interval than solution 1).

### 31.3 Wideband Modulation not Using Spread Spectrum

Digital modulation systems under FCC part 15.247 includes 2-FSK and GFSK modulation. A maximum peak output power of 1 W (+30 dBm) is allowed if the 6 dB bandwidth of the modulated signal exceeds 500 kHz. In addition, the peak power spectral density conducted to the antenna shall not be greater than +8 dBm in any 3 kHz band.

Operating at high data rates and high frequency separation, the **CC2500** is suited for systems targeting compliance with digital modulation systems as defined by FCC part 15.247. An external power amplifier is needed to increase the output above +1 dBm.

### 31.4 Data Burst Transmissions

The high maximum data rate of **CC2500** opens up for burst transmissions. A low average data rate link (e.g. 10 kBaud), can be realized using a higher over-the-air data rate. Buffering the data and transmitting in bursts at high data rate (e.g. 500 kBaud) will reduce the time in active mode, and hence also reduce the average current consumption significantly. Reducing the time in active mode will reduce the likelihood of collisions with other systems, e.g. WLAN.

### 31.5 Continuous Transmissions

In data streaming applications the **CC2500** opens up for continuous transmissions at 500 kBaud effective data rate. As the modulation is done with a closed loop PLL, there is no limitation in the length of a transmission. (Open loop modulation used in some transceivers often prevents this kind of continuous data streaming and reduces the effective data rate.)

### 31.6 Crystal Drift Compensation

The CC2500 has a very fine frequency resolution (see Table 9). This feature can be used to compensate for frequency offset and drift.

The frequency offset between an 'external' transmitter and the receiver is measured in the CC2500 and can be read back from the FREQEST status register as described in Section 14.1. The measured frequency offset can be used to calibrate the frequency using the 'external' transmitter as the reference. That is, the received signal of the device will match the receiver's channel filter better. In the same way the centre frequency of the transmitted signal will match the 'external' transmitter's signal.

### 31.7 Spectrum Efficient Modulation

CC2500 also has the possibility to use Gaussian shaped 2-FSK (GFSK). This spectrum-shaping feature improves adjacent channel power (ACP) and occupied bandwidth. In 'true' 2-FSK systems with abrupt frequency shifting, the spectrum is inherently broad. By making the frequency shift 'softer', the spectrum can be made significantly narrower. Thus, higher data rates can be transmitted in the same bandwidth using GFSK.

### 31.8 Low Cost Systems

A differential antenna will eliminate the need for a balun, and the DC biasing can be achieved in the antenna topology, see Figure 3. The CC25XX Folded Dipole reference design [8] contains schematics and layout files for a CC2500EM with a folded dipole PCB antenna. Please see DN004 [9] for more details on this design.

A HC-49 type SMD crystal is used in the CC2500EM reference design [4]. Note that the crystal package strongly influences the price. In a size constrained PCB design a smaller, but more expensive, crystal may be used.

### 31.9 Battery Operated Systems

In low power applications, the SLEEP state with the crystal oscillator core switched off should be used when the CC2500 is not active. It is possible to leave the crystal oscillator core running in the SLEEP state if start-up time is critical.

The WOR functionality should be used in low power applications.

### 31.10 Increasing Output Power

In some applications it may be necessary to extend the link range. Adding an external power amplifier is the most effective way of doing this.

The power amplifier should be inserted between the antenna and the balun, and two T/R switches are needed to disconnect the PA in RX mode. See Figure 29.

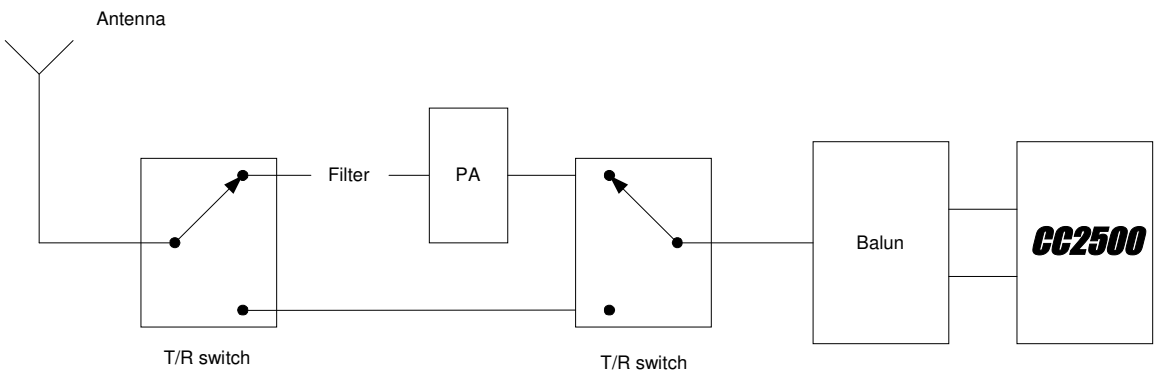


**Figure 29. Block Diagram of CC2500 Usage with External Power Amplifier**

## 32 Configuration Registers

The configuration of CC2500 is done by programming 8-bit registers. The optimum configuration data based on selected system parameters are most easily found by using the SmartRF® Studio software [5]. Complete descriptions of the registers are given in the following tables. After chip reset, all the registers have default values as shown in the tables. The optimum register setting might differ from the default value. After a reset all registers that shall be different from the default value therefore needs to be programmed through the SPI interface.

There are 13 command strobe registers, listed in Table 34. Accessing these registers will initiate the change of an internal state or mode. There are 47 normal 8-bit configuration registers, listed in Table 35. Many of these registers are for test purposes only, and need not be written for normal operation of CC2500.

There are also 12 status registers, which are listed in Table 36. These registers, which are read-only, contain information about the status of CC2500.

The two FIFOs are accessed through one 8-bit register. Write operations write to the TX FIFO, while read operations read from the RX FIFO.

During the header byte transfer and while writing data to a register or the TX FIFO, a status byte is returned on the SO line. This status byte is described in Table 17 on page 23.

Table 37 summarizes the SPI address space. The address to use is given by adding the base address to the left and the burst and R/W bits on the top. Note that the burst bit has different meaning for base addresses above and below 0x2F.

| Address | Strobe Name | Description |
|---|---|---|
| 0x30 | SRES | Reset chip. |
| 0x31 | SFSTXON | Enable and calibrate frequency synthesizer (if MCSM0.FS_AUTOCAL=1). If in RX (with CCA): Go to a wait state where only the synthesizer is running (for quick RX / TX turnaround). |
| 0x32 | SXOFF | Turn off crystal oscillator. |
| 0x33 | SCAL | Calibrate frequency synthesizer and turn it off. SCAL can be strobed from IDLE mode without setting manual calibration mode (MCSM0.FS_AUTOCAL=0) |
| 0x34 | SRX | Enable RX. Perform calibration first if coming from IDLE and MCSM0.FS_AUTOCAL=1. |
| 0x35 | STX | In IDLE state: Enable TX. Perform calibration first if MCSM0.FS_AUTOCAL=1. If in RX state and CCA is enabled: Only go to TX if channel is clear. |
| 0x36 | SIDLE | Exit RX / TX, turn off frequency synthesizer and exit Wake-On-Radio mode if applicable. |
| 0x38 | SWOR | Start automatic RX polling sequence (Wake-on-Radio) as described in Section 19.5 if WORCTRL.RC_PD=0. |
| 0x39 | SPWD | Enter power down mode when CSn goes high. |
| 0x3A | SFRX | Flush the RX FIFO buffer. Only issue SFRX in IDLE or RXFIFO_OVERFLOW states. |
| 0x3B | SFTX | Flush the TX FIFO buffer. Only issue SFTX in IDLE or TXFIFO_UNDERFLOW states. |
| 0x3C | SWORRST | Reset real time clock to Event1 value. |
| 0x3D | SNOP | No operation. May be used to get access to the chip status byte. |

**Table 34: Command Strobes**

| Address | Register | Description | Preserved in SLEEP State | Details on Page Number |
|---|---|---|---|---|
| 0x00 | IOCFG2 | GDO2 output pin configuration | Yes | 61 |
| 0x01 | IOCFG1 | GDO1 output pin configuration | Yes | 61 |
| 0x02 | IOCFG0 | GDO0 output pin configuration | Yes | 61 |
| 0x03 | FIFOTHR | RX FIFO and TX FIFO thresholds | Yes | 62 |
| 0x04 | SYNC1 | Sync word, high byte | Yes | 62 |
| 0x05 | SYNC0 | Sync word, low byte | Yes | 62 |
| 0x06 | PKTLEN | Packet length | Yes | 62 |
| 0x07 | PKTCTRL1 | Packet automation control | Yes | 63 |
| 0x08 | PKTCTRL0 | Packet automation control | Yes | 64 |
| 0x09 | ADDR | Device address | Yes | 64 |
| 0x0A | CHANNR | Channel number | Yes | 64 |
| 0x0B | FSCTRL1 | Frequency synthesizer control | Yes | 65 |
| 0x0C | FSCTRL0 | Frequency synthesizer control | Yes | 65 |
| 0x0D | FREQ2 | Frequency control word, high byte | Yes | 65 |
| 0x0E | FREQ1 | Frequency control word, middle byte | Yes | 65 |
| 0x0F | FREQ0 | Frequency control word, low byte | Yes | 65 |
| 0x10 | MDMCFG4 | Modem configuration | Yes | 66 |
| 0x11 | MDMCFG3 | Modem configuration | Yes | 66 |
| 0x12 | MDMCFG2 | Modem configuration | Yes | 67 |
| 0x13 | MDMCFG1 | Modem configuration | Yes | 68 |
| 0x14 | MDMCFG0 | Modem configuration | Yes | 68 |
| 0x15 | DEVIATN | Modem deviation setting | Yes | 69 |
| 0x16 | MCSM2 | Main Radio Control State Machine configuration | Yes | 70 |
| 0x17 | MCSM1 | Main Radio Control State Machine configuration | Yes | 71 |
| 0x18 | MCSM0 | Main Radio Control State Machine configuration | Yes | 72 |
| 0x19 | FOCCFG | Frequency Offset Compensation configuration | Yes | 73 |
| 0x1A | BSCFG | Bit Synchronization configuration | Yes | 74 |
| 0x1B | AGCTRL2 | AGC control | Yes | 75 |
| 0x1C | AGCTRL1 | AGC control | Yes | 76 |
| 0x1D | AGCTRL0 | AGC control | Yes | 77 |
| 0x1E | WOREVT1 | High byte Event 0 timeout | Yes | 77 |
| 0x1F | WOREVT0 | Low byte Event 0 timeout | Yes | 78 |
| 0x20 | WORCTRL | Wake On Radio control | Yes | 78 |
| 0x21 | FREND1 | Front end RX configuration | Yes | 78 |
| 0x22 | FREND0 | Front end TX configuration | Yes | 79 |
| 0x23 | FSCAL3 | Frequency synthesizer calibration | Yes | 79 |
| 0x24 | FSCAL2 | Frequency synthesizer calibration | Yes | 79 |
| 0x25 | FSCAL1 | Frequency synthesizer calibration | Yes | 80 |
| 0x26 | FSCAL0 | Frequency synthesizer calibration | Yes | 80 |
| 0x27 | RCCTRL1 | RC oscillator configuration | Yes | 80 |
| 0x28 | RCCTRL0 | RC oscillator configuration | Yes | 80 |
| 0x29 | FSTEST | Frequency synthesizer calibration control | No | 80 |
| 0x2A | PTEST | Production test | No | 80 |
| 0x2B | AGCTEST | AGC test | No | 81 |
| 0x2C | TEST2 | Various test settings | No | 81 |
| 0x2D | TEST1 | Various test settings | No | 81 |
| 0x2E | TEST0 | Various test settings | No | 81 |

**Table 35: Configuration Registers Overview**

| Address | Register | Description | Details on Page Number |
|---|---|---|---|
| 0x30 (0xF0) | PARTNUM | CC2500 part number | 81 |
| 0x31 (0xF1) | VERSION | Current version number | 81 |
| 0x32 (0xF2) | FREQEST | Frequency offset estimate | 81 |
| 0x33 (0xF3) | LQI | Demodulator estimate for Link Quality | 82 |
| 0x34 (0xF4) | RSSI | Received signal strength indication | 82 |
| 0x35 (0xF5) | MARCSTATE | Control state machine state | 82 |
| 0x36 (0xF6) | WORTIME1 | High byte of WOR timer | 83 |
| 0x37 (0xF7) | WORTIME0 | Low byte of WOR timer | 83 |
| 0x38 (0xF8) | PKTSTATUS | Current GDOx status and packet status | 83 |
| 0x39 (0xF9) | VCO_VC_DAC | Current setting from PLL calibration module | 83 |
| 0x3A (0xFA) | TXBYTES | Underflow and number of bytes in the TX FIFO | 83 |
| 0x3B (0xFB) | RXBYTES | Overflow and number of bytes in the RX FIFO | 84 |
| 0x3C (0xFC) | RCCTRL1_STATUS | Last RC oscillator calibration result | 84 |
| 0x3D (0xFD) | RCCTRL0_STATUS | Last RC oscillator calibration result | 84 |

**Table 36: Status Registers Overview**

| | Write | | Read | | |
|---|---|---|---|---|---|
| | Single byte | Burst | Single byte | Burst | |
| | +0x00 | +0x40 | +0x80 | +0xC0 | |
| 0x00 | IOCFG2 | | | | R/W configuration registers, burst access possible |
| 0x01 | IOCFG1 | | | | |
| 0x02 | IOCFG0 | | | | |
| 0x03 | FIFOTHR | | | | |
| 0x04 | SYNC1 | | | | |
| 0x05 | SYNC0 | | | | |
| 0x06 | PKTLEN | | | | |
| 0x07 | PKTCTRL1 | | | | |
| 0x08 | PKTCTRL0 | | | | |
| 0x09 | ADDR | | | | |
| 0x0A | CHANNR | | | | |
| 0x0B | FSCTRL1 | | | | |
| 0x0C | FSCTRL0 | | | | |
| 0x0D | FREQ2 | | | | |
| 0x0E | FREQ1 | | | | |
| 0x0F | FREQ0 | | | | |
| 0x10 | MDMCFG4 | | | | |
| 0x11 | MDMCFG3 | | | | |
| 0x12 | MDMCFG2 | | | | |
| 0x13 | MDMCFG1 | | | | |
| 0x14 | MDMCFG0 | | | | |
| 0x15 | DEVIATN | | | | |
| 0x16 | MCSM2 | | | | |
| 0x17 | MCSM1 | | | | |
| 0x18 | MCSM0 | | | | |
| 0x19 | FOCCFG | | | | |
| 0x1A | BSCFG | | | | |
| 0x1B | AGCCTRL2 | | | | |
| 0x1C | AGCCTRL1 | | | | |
| 0x1D | AGCCTRL0 | | | | |
| 0x1E | WOREVT1 | | | | |
| 0x1F | WOREVT0 | | | | |
| 0x20 | WORCTRL | | | | |
| 0x21 | FREND1 | | | | |
| 0x22 | FREND0 | | | | |
| 0x23 | FSCAL3 | | | | |
| 0x24 | FSCAL2 | | | | |
| 0x25 | FSCAL1 | | | | |
| 0x26 | FSCAL0 | | | | |
| 0x27 | RCCTRL1 | | | | |
| 0x28 | RCCTRL0 | | | | |
| 0x29 | FSTEST | | | | |
| 0x2A | PTEST | | | | |
| 0x2B | AGCTEST | | | | |
| 0x2C | TEST2 | | | | |
| 0x2D | TEST1 | | | | |
| 0x2E | TEST0 | | | | |
| 0x2F | | | | | |
| 0x30 | SRES | | SRES | PARTNUM | Command strobes, status registers (read only) and multi byte registers |
| 0x31 | SFSTXON | | SFSTXON | VERSION | |
| 0x32 | SXOFF | | SXOFF | FREQEST | |
| 0x33 | SCAL | | SCAL | LQI | |
| 0x34 | SRX | | SRX | RSSI | |
| 0x35 | STX | | STX | MARCSTATE | |
| 0x36 | SIDLE | | SIDLE | WORTIME1 | |
| 0x37 | | | | WORTIME0 | |
| 0x38 | SWOR | | SWOR | PKTSTATUS | |
| 0x39 | SPWD | | SPWD | VCO_VC_DAC | |
| 0x3A | SFRX | | SFRX | TXBYTES | |
| 0x3B | SFTX | | SFTX | RXBYTES | |
| 0x3C | SWORRST | | SWORRST | RCCTRL1_STATUS | |
| 0x3D | SNOP | | SNOP | RCCTRL0_STATUS | |
| 0x3E | PATABLE | PATABLE | PATABLE | PATABLE | |
| 0x3F | TX FIFO | TX FIFO | RX FIFO | RX FIFO | |

**Table 37: SPI Address Space**

## 32.1 Configuration Register Details – Registers with Preserved Values in SLEEP State

### 0x00: IOCFG2 – GDO2 Output Pin Configuration

| Bit | Field Name | Reset | R/W | Description |
|---|---|---|---|---|
| 7 | Reserved | | R0 | |
| 6 | GDO2_INV | 0 | R/W | Invert output, i.e. select active low (1) / high (0) |
| 5:0 | GDO2_CFG[5:0] | 41 (0x29) | R/W | Default is CHIP_RDYn (see Table 33 on page 53). |

### 0x01: IOCFG1 – GDO1 Output Pin Configuration

| Bit | Field Name | Reset | R/W | Description |
|---|---|---|---|---|
| 7 | GDO_DS | 0 | R/W | Set high (1) or low (0) output drive strength on the GDO pins. |
| 6 | GDO1_INV | 0 | R/W | Invert output, i.e. select active low (1) / high (0) |
| 5:0 | GDO1_CFG[5:0] | 46 (0x2E) | R/W | Default is 3-state (see Table 33 on page 53) |

### 0x02: IOCFG0 – GDO0 Output Pin Configuration

| Bit | Field Name | Reset | R/W | Description |
|---|---|---|---|---|
| 7 | TEMP_SENSOR_ENABLE | 0 | R/W | Enable analog temperature sensor. Write 0 in all other register bits when using temperature sensor. |
| 6 | GDO0_INV | 0 | R/W | Invert output, i.e. select active low (1) / high (0) |
| 5:0 | GDO0_CFG[5:0] | 63 (0x3F) | R/W | Default is CLK_XOSC/192 (see Table 33 on page 53). |

### 0x03: FIFOTHR – RX FIFO and TX FIFO Thresholds

| Bit | Field Name | Reset | R/W | Description |
|---|---|---|---|---|
| 7:4 | Reserved | 0 | R0 | Write 0 for compatibility with possible future extensions |
| 3:0 | FIFO_THR[3:0] | 7 (0111) | R/W | Set the threshold for the TX FIFO and RX FIFO. The threshold is exceeded when the number of bytes in the FIFO is equal to or higher than the threshold value. |

| Setting | Bytes in TX FIFO | Bytes in RX FIFO |
|---|---|---|
| 0 (0000) | 61 | 4 |
| 1 (0001) | 57 | 8 |
| 2 (0010) | 53 | 12 |
| 3 (0011) | 49 | 16 |
| 4 (0100) | 45 | 20 |
| 5 (0101) | 41 | 24 |
| 6 (0110) | 37 | 28 |
| 7 (0111) | 33 | 32 |
| 8 (1000) | 29 | 36 |
| 9 (1001) | 25 | 40 |
| 10 (1010) | 21 | 44 |
| 11 (1011) | 17 | 48 |
| 12 (1100) | 13 | 52 |
| 13 (1101) | 9 | 56 |
| 14 (1110) | 5 | 60 |
| 15 (1111) | 1 | 64 |

### 0x04: SYNC1 – Sync Word, High Byte

| Bit | Field Name | Reset | R/W | Description |
|---|---|---|---|---|
| 7:0 | SYNC[15:8] | 211 (0xD3) | R/W | 8 MSB of 16-bit sync word |

### 0x05: SYNC0 – Sync Word, Low Byte

| Bit | Field Name | Reset | R/W | Description |
|---|---|---|---|---|
| 7:0 | SYNC[7:0] | 145 (0x91) | R/W | 8 LSB of 16-bit sync word |

### 0x06: PKTLEN – Packet Length

| Bit | Field Name | Reset | R/W | Description |
|---|---|---|---|---|
| 7:0 | PACKET_LENGTH | 255 (0xFF) | R/W | Indicates the packet length when fixed packet length is enabled. If variable length packets are used, this value indicates the maximum length packets allowed. |

## 0x07: PKTCTRL1 – Packet Automation Control

| Bit | Field Name | Reset | R/W | Description |
|---|---|---|---|---|
| 7:5 | PQT[2:0] | 0 (000) | R/W | Preamble quality estimator threshold. The preamble quality estimator increases an internal counter by one each time a bit is received that is different from the previous bit, and decreases the counter by 8 each time a bit is received that is the same as the last bit.<br>A threshold of 4·PQT for this counter is used to gate sync word detection. When PQT=0 a sync word is always accepted. |
| 4 | Reserved | 0 | R0 | |
| 3 | CRC_AUTOFLUSH | 0 | R/W | Enable automatic flush of RX FIFO when CRC is not OK. This requires that only one packet is in the RX FIFO and that packet length is limited to the RX FIFO size.<br>PKTCTRL0.CC2400_EN must be 0 (default) for the CRC autoflush function to work correctly. |
| 2 | APPEND_STATUS | 1 | R/W | When enabled, two status bytes will be appended to the payload of the packet. The status bytes contain RSSI and LQI values, as well as the CRC OK flag. |
| 1:0 | ADR_CHK[1:0] | 0 (00) | R/W | Controls address check configuration of received packages.<br>Setting: Address check configuration<br>0 (00): No address check<br>1 (01): Address check, no broadcast<br>2 (10): Address check and 0 (0x00) broadcast<br>3 (11): Address check and 0 (0x00) and 255 (0xFF) broadcast |

### 0x08: PKTCTRL0 – Packet Automation Control

| Bit | Field Name | Reset | R/W | Description |
|---|---|---|---|---|
| 7 | Reserved | | R0 | |
| 6 | WHITE_DATA | 1 | R/W | Turn data whitening on / off<br>0: Whitening off<br>1: Whitening on<br>Data whitening can only be used when PKTCTRL0.CC2400_EN=0 (default). |
| 5:4 | PKT_FORMAT[1:0] | 0 (00) | R/W | Format of RX and TX data<br>Setting: Packet format<br>0 (00): Normal mode, use FIFOs for RX and TX<br>1 (01): Synchronous serial mode, used for backwards compatibility. Data in on GDO0<br>2 (10): Random TX mode; sends random data using PN9 generator. Used for test. Works as normal mode, setting 0 (00), in RX.<br>3 (11): Asynchronous serial mode. Data in on GDO0 and data out on either of the GDO0 pins |
| 3 | CC2400_EN | 0 | R/W | Enable CC2400 support. Use same CRC implementation as CC2400.<br>PKTCTRL1.CRC_AUTOFLUSH must be 0 if PKTCTRL0.CC2400_EN=1.<br>PKTCTRL0.WHITE_DATA must be 0 if PKTCTRL0.CC2400_EN=1. |
| 2 | CRC_EN | 1 | R/W | 1: CRC calculation in TX and CRC check in RX enabled<br>0: CRC disabled for TX and RX |
| 1:0 | LENGTH_CONFIG[1:0] | 1 (01) | R/W | Configure the packet length<br>Setting: Packet length configuration<br>0 (00): Fixed packet length mode. Length configured in PKTLEN register<br>1 (01): Variable packet length mode. Packet length configured by the first byte after sync word<br>2 (10): Infinite packet length mode<br>3 (11): Reserved |

### 0x09: ADDR – Device Address

| Bit | Field Name | Reset | R/W | Description |
|---|---|---|---|---|
| 7:0 | DEVICE_ADDR[7:0] | 0 (0x00) | R/W | Address used for packet filtration. Optional broadcast addresses are 0 (0x00) and 255 (0xFF). |

### 0x0A: CHANNR – Channel Number

| Bit | Field Name | Reset | R/W | Description |
|---|---|---|---|---|
| 7:0 | CHAN[7:0] | 0 (0x00) | R/W | The 8-bit unsigned channel number, which is multiplied by the channel spacing setting and added to the base frequency. |

### 0x0B: FSCTRL1 – Frequency Synthesizer Control

| Bit | Field Name | Reset | R/W | Description |
|---|---|---|---|---|
| 7:5 | Reserved | | R0 | |
| 4:0 | FREQ_IF[4:0] | 15 (0x0F) | R/W | The desired IF frequency to employ in RX. Subtracted from FS base frequency in RX and controls the digital complex mixer in the demodulator. $f_{IF} = \frac{f_{XOSC}}{2^{10}} \cdot FREQ_IF$ The default value gives an IF frequency of 381 kHz, assuming a 26.0 MHz crystal. |

### 0x0C: FSCTRL0 – Frequency Synthesizer Control

| Bit | Field Name | Reset | R/W | Description |
|---|---|---|---|---|
| 7:0 | FREQOFF[7:0] | 0 (0x00) | R/W | Frequency offset added to the base frequency before being used by the FS. (2's complement). Resolution is $F_{XTAL}/2^{14}$ (1.59 - 1.65 kHz); range is ±202 kHz to ±210 kHz, dependent of XTAL frequency. |

### 0x0D: FREQ2 – Frequency Control Word, High Byte

| Bit | Field Name | Reset | R/W | Description |
|---|---|---|---|---|
| 7:6 | FREQ[23:22] | 1 (01) | R | FREQ[23:22] is always binary 01 (the FREQ2 register is in the range 85 to 95 with 26-27 MHz crystal) |
| 5:0 | FREQ[21:16] | 30 (0x1E) | R/W | FREQ[23:0] is the base frequency for the frequency synthesiser in increments of $F_{XOSC}/2^{16}$. $f_{carrier} = \frac{f_{XOSC}}{2^{16}} \cdot FREQ[23:0]$ |

### 0x0E: FREQ1 – Frequency Control Word, Middle Byte

| Bit | Field Name | Reset | R/W | Description |
|---|---|---|---|---|
| 7:0 | FREQ[15:8] | 196 (0xC4) | R/W | Ref. FREQ2 register |

### 0x0F: FREQ0 – Frequency Control Word, Low Byte

| Bit | Field Name | Reset | R/W | Description |
|---|---|---|---|---|
| 7:0 | FREQ[7:0] | 236 (0xEC) | R/W | Ref. FREQ2 register |

### 0x10: MDMCFG4 – Modem Configuration

| Bit | Field Name | Reset | R/W | Description |
|---|---|---|---|---|
| 7:6 | CHANBW_E[1:0] | 2 (10) | R/W | |
| 5:4 | CHANBW_M[1:0] | 0 (00) | R/W | Sets the decimation ratio for the delta-sigma ADC input stream and thus the channel bandwidth. $BW_{channel} = \frac{f_{XOSC}}{8 \cdot (4 + CHANBW_M) \cdot 2^{CHANBW_E}}$ The default values give 203 kHz channel filter bandwidth, assuming a 26.0 MHz crystal. |
| 3:0 | DRATE_E[3:0] | 12 (1100) | R/W | The exponent of the user specified symbol rate |

### 0x11: MDMCFG3 – Modem Configuration

| Bit | Field Name | Reset | R/W | Description |
|---|---|---|---|---|
| 7:0 | DRATE_M[7:0] | 34 (0x22) | R/W | The mantissa of the user specified symbol rate. The symbol rate is configured using an unsigned, floating-point number with 9-bit mantissa and 4-bit exponent. The 9th bit is a hidden '1'. The resulting data rate is: $R_{DATA} = \frac{(256 + DRATE_M) \cdot 2^{DRATE_E}}{2^{28}} \cdot f_{XOSC}$ The default values give a data rate of 115.051 kBaud (closest setting to 115.2 kBaud), assuming a 26.0 MHz crystal. |

## 0x12: MDMCFG2 – Modem Configuration

| Bit | Field Name | Reset | R/W | Description |
|---|---|---|---|---|
| 7 | DEM_DCFILT_OFF | 0 | R/W | Disable digital DC blocking filter before demodulator.<br>0 = Enable (better sensitivity)<br>1 = Disable (current optimized). Only for data rates ≤ 250 kBaud<br>The recommended IF frequency changes when the DC blocking is disabled. Please use SmartRF® Studio [5] to calculate correct register setting. |
| 6:4 | MOD_FORMAT[2:0] | 0 (000) | R/W | The modulation format of the radio signal<br>Setting / Modulation format<br>0 (000) 2-FSK<br>1 (001) GFSK<br>2 (010) -<br>3 (011) OOK<br>4 (100) -<br>5 (101) -<br>6 (110) -<br>7 (111) MSK |
| 3 | MANCHESTER_EN | 0 | R/W | Enables Manchester encoding/decoding.<br>0 = Disable<br>1 = Enable |
| 2:0 | SYNC_MODE[2:0] | 2 (010) | R/W | Combined sync-word qualifier mode.<br>The values 0 (000) and 4 (100) disables preamble and sync word transmission in TX and preamble and sync word detection in RX.<br>The values 1 (001), 2 (010), 5 (101) and 6 (110) enables 16-bit sync word transmission in TX and 16-bits sync word detection in RX. Only 15 of 16 bits need to match in RX when using setting 1 (001) or 5 (101). The values 3 (011) and 7 (111) enables repeated sync word transmission in TX and 32-bits sync word detection in RX (only 30 of 32 bits need to match).<br>Setting / Sync-word qualifier mode<br>0 (000) No preamble/sync<br>1 (001) 15/16 sync word bits detected<br>2 (010) 16/16 sync word bits detected<br>3 (011) 30/32 sync word bits detected<br>4 (100) No preamble/sync, carrier-sense above threshold<br>5 (101) 15/16 + carrier-sense above threshold<br>6 (110) 16/16 + carrier-sense above threshold<br>7 (111) 30/32 + carrier-sense above threshold |

### 0x13: MDMCFG1 – Modem Configuration

| Bit | Field Name | Reset | R/W | Description |
|---|---|---|---|---|
| 7 | FEC_EN | 0 | R/W | Enable Forward Error Correction (FEC) with interleaving for packet payload<br>0 = Disable<br>1 = Enable (Only supported for fixed packet length mode, i.e. PKTCTRL0.LENGTH_CONFIG=0) |
| 6:4 | NUM_PREAMBLE[2:0] | 2 (010) | R/W | Sets the minimum number of preamble bytes to be transmitted<br>Setting / Number of preamble bytes<br>0 (000) / 2<br>1 (001) / 3<br>2 (010) / 4<br>3 (011) / 6<br>4 (100) / 8<br>5 (101) / 12<br>6 (110) / 16<br>7 (111) / 24 |
| 3:2 | Reserved | | R0 | |
| 1:0 | CHANSPC_E[1:0] | 2 (10) | R/W | 2 bit exponent of channel spacing |

### 0x14: MDMCFG0 – Modem Configuration

| Bit | Field Name | Reset | R/W | Description |
|---|---|---|---|---|
| 7:0 | CHANSPC_M[7:0] | 248 (0xF8) | R/W | 8-bit mantissa of channel spacing. The channel spacing is multiplied by the channel number CHAN and added to the base frequency. It is unsigned and has the format:<br>$\Delta f_{CHANNEL} = \frac{f_{XOSC}}{2^{18}} \cdot (256 + CHANSPC_M) \cdot 2^{CHANSPC_E}$<br>The default values give 199.951 kHz channel spacing (the closest setting to 200 kHz), assuming 26.0 MHz crystal frequency. |

### 0x15: DEVIATN – Modem Deviation Setting

| Bit | Field Name | Reset | R/W | Description |
|---|---|---|---|---|
| 7 | Reserved | | R0 | |
| 6:4 | DEVIATION_E[2:0] | 4 (100) | R/W | Deviation exponent |
| 3 | Reserved | | R0 | |
| 2:0 | DEVIATION_M[2:0] | 7 (111) | R/W | When MSK modulation is enabled:<br>Sets fraction of symbol period used for phase change. Refer to the SmartRF® Studio software [5] for correct DEVIATN setting when using MSK.<br>When 2-FSK/GFSK modulation is enabled:<br>Deviation mantissa, interpreted as a 4-bit value with MSB implicit 1. The resulting deviation is given by:<br>$f_{dev} = \frac{f_{xosc}}{2^{17}} \cdot (8 + DEVIATION_M) \cdot 2^{DEVIATION_E}$<br>The default values give ±47.607 kHz deviation, assuming 26.0 MHz crystal frequency. |

## 0x16: MCSM2 – Main Radio Control State Machine Configuration

| Bit | Field Name | Reset | R/W | Description |
|---|---|---|---|---|
| 7:5 | Reserved | | R0 | Reserved |
| 4 | RX_TIME_RSSI | 0 | R/W | Direct RX termination based on RSSI measurement (carrier sense). |
| 3 | RX_TIME_QUAL | 0 | R/W | When the RX_TIME timer expires the chip stays in RX mode if sync word is found when RX_TIME_QUAL=0, or either sync word is found or PQT is set when RX_TIME_QUAL=1. |
| 2:0 | RX_TIME[2:0] | 7 (111) | R/W | Timeout for sync word search in RX for both WOR mode and normal RX operation. The timeout is relative to the programmed EVENT0 timeout. |

The RX timeout in µs is given by EVENT0·C(RX_TIME, WOR_RES) ·26/X, where C is given by the table below and X is the crystal oscillator frequency in MHz:

| RX_TIME[2:0] | WOR_RES = 0 | WOR_RES = 1 | WOR_RES = 2 | WOR_RES = 3 |
|---|---|---|---|---|
| 0 (000) | 3.6058 | 18.0288 | 32.4519 | 46.8750 |
| 1 (001) | 1.8029 | 9.0144 | 16.2260 | 23.4375 |
| 2 (010) | 0.9014 | 4.5072 | 8.1130 | 11.7188 |
| 3 (011) | 0.4507 | 2.2536 | 4.0565 | 5.8594 |
| 4 (100) | 0.2254 | 1.1268 | 2.0282 | 2.9297 |
| 5 (101) | 0.1127 | 0.5634 | 1.0141 | 1.4648 |
| 6 (110) | 0.0563 | 0.2817 | 0.5071 | 0.7324 |
| 7 (111) | Until end of packet | | | |

As an example, EVENT0=34666, WOR_RES=0 and RX_TIME=6 corresponds to 1.95 ms RX timeout, 1 s polling interval and 0.195% duty cycle. Note that WOR_RES should be 0 or 1 when using WOR because using WOR_RES > 1 will give a very low duty cycle. In applications where WOR is not used all settings of WOR_RES can be used.

The duty cycle using WOR is approximated by:

| RX_TIME[2:0] | WOR_RES = 0 | WOR_RES = 1 |
|---|---|---|
| 0 (000) | 12.50% | 1.95% |
| 1 (001) | 6.250% | 9765 ppm |
| 2 (010) | 3.125% | 4883 ppm |
| 3 (011) | 1.563% | 2441 ppm |
| 4 (100) | 0.781% | NA |
| 5 (101) | 0.391% | NA |
| 6 (110) | 0.195% | NA |
| 7 (111) | NA | |

Note that the RC oscillator must be enabled in order to use setting 0-6, because the timeout counts RC oscillator periods. WOR mode does not need to be enabled.
The timeout counter resolution is limited: With RX_TIME=0, the timeout count is given by the 13 MSBs of EVENT0, decreasing to the 7 MSBs of EVENT0 with RX_TIME=6.

## 0x17: MCSM1 – Main Radio Control State Machine Configuration

<table>
<tr><th>Bit</th><th>Field Name</th><th>Reset</th><th>R/W</th><th>Description</th></tr>
<tr><td>7:6</td><td>Reserved</td><td></td><td>R0</td><td></td></tr>
<tr><td>5:4</td><td>CCA_MODE[1:0]</td><td>3 (11)</td><td>R/W</td><td>Selects CCA_MODE; Reflected in CCA signal
<table>
<tr><th>Setting</th><th>Clear channel indication</th></tr>
<tr><td>0 (00)</td><td>Always</td></tr>
<tr><td>1 (01)</td><td>If RSSI below threshold</td></tr>
<tr><td>2 (10)</td><td>Unless currently receiving a packet</td></tr>
<tr><td>3 (11)</td><td>If RSSI below threshold unless currently receiving a packet</td></tr>
</table></td></tr>
<tr><td>3:2</td><td>RXOFF_MODE[1:0]</td><td>0 (00)</td><td>R/W</td><td>Select what should happen when a packet has been received
<table>
<tr><th>Setting</th><th>Next state after finishing packet reception</th></tr>
<tr><td>0 (00)</td><td>IDLE</td></tr>
<tr><td>1 (01)</td><td>FSTXON</td></tr>
<tr><td>2 (10)</td><td>TX</td></tr>
<tr><td>3 (11)</td><td>Stay in RX</td></tr>
</table>
It is not possible to set RXOFF_MODE to be TX or FSTXON and at the same time use CCA.</td></tr>
<tr><td>1:0</td><td>TXOFF_MODE[1:0]</td><td>0 (00)</td><td>R/W</td><td>Select what should happen when a packet has been sent (TX)
<table>
<tr><th>Setting</th><th>Next state after finishing packet transmission</th></tr>
<tr><td>0 (00)</td><td>IDLE</td></tr>
<tr><td>1 (01)</td><td>FSTXON</td></tr>
<tr><td>2 (10)</td><td>Stay in TX (start sending preamble)</td></tr>
<tr><td>3 (11)</td><td>RX</td></tr>
</table></td></tr>
</table>

## 0x18: MCSM0 – Main Radio Control State Machine Configuration

<table>
<tr><th>Bit</th><th>Field Name</th><th>Reset</th><th>R/W</th><th>Description</th></tr>
<tr><td>7:6</td><td>Reserved</td><td></td><td>R0</td><td></td></tr>
<tr><td>5:4</td><td>FS_AUTOCAL[1:0]</td><td>0 (00)</td><td>R/W</td><td>Automatically calibrate when going to RX or TX, or back to IDLE
<table>
<tr><th>Setting</th><th>When to perform automatic calibration</th></tr>
<tr><td>0 (00)</td><td>Never (manually calibrate using SCAL strobe)</td></tr>
<tr><td>1 (01)</td><td>When going from IDLE to RX or TX (or FSTXON)</td></tr>
<tr><td>2 (10)</td><td>When going from RX or TX back to IDLE automatically</td></tr>
<tr><td>3 (11)</td><td>Every 4th time when going from RX or TX to IDLE automatically</td></tr>
</table>
In some automatic wake-on-radio (WOR) applications, using setting 3 (11) can significantly reduce current consumption.</td></tr>
<tr><td>3:2</td><td>PO_TIMEOUT</td><td>1 (01)</td><td>R/W</td><td>Programs the number of times the six-bit ripple counter must expire after XOSC has stabilized before CHP_RDYn goes low.<br><br>If XOSC is on (stable) during power-down, PO_TIMEOUT should be set so that the regulated digital supply voltage has time to stabilize before CHP_RDYn goes low (PO_TIMEOUT=2 recommended). Typical start-up time for the voltage regulator is 50 us.<br><br>If XOSC is off during power-down and the regulated digital supply voltage has sufficient time to stabilize while waiting for the crystal to be stable, PO_TIMEOUT can be set to 0. For robust operation it is recommended to use PO_TIMEOUT=2.
<table>
<tr><th>Setting</th><th>Expire count</th><th>Timeout after XOSC start</th></tr>
<tr><td>0 (00)</td><td>1</td><td>Approx. 2.3 – 2.4 µs</td></tr>
<tr><td>1 (01)</td><td>16</td><td>Approx. 37 – 39 µs</td></tr>
<tr><td>2 (10)</td><td>64</td><td>Approx. 149 – 155 µs</td></tr>
<tr><td>3 (11)</td><td>256</td><td>Approx. 597 – 620 µs</td></tr>
</table>
Exact timeout depends on crystal frequency.</td></tr>
<tr><td>1</td><td>PIN_CTRL_EN</td><td>0</td><td>R/W</td><td>Enables the pin radio control option</td></tr>
<tr><td>0</td><td>XOSC_FORCE_ON</td><td>0</td><td>R/W</td><td>Force the XOSC to stay on in the SLEEP state.</td></tr>
</table>

## 0x19: FOCCFG – Frequency Offset Compensation Configuration

<table>
<tr><th>Bit</th><th>Field Name</th><th>Reset</th><th>R/W</th><th>Description</th></tr>
<tr><td>7:6</td><td>Reserved</td><td></td><td>R0</td><td></td></tr>
<tr><td>5</td><td>FOC_BS_CS_GATE</td><td>1</td><td>R/W</td><td>If set, the demodulator freezes the frequency offset compensation and clock recovery feedback loops until the CARRIER_SENSE signal goes high.</td></tr>
<tr><td>4:3</td><td>FOC_PRE_K[1:0]</td><td>2 (10)</td><td>R/W</td><td>The frequency compensation loop gain to be used before a sync word is detected.
<table>
<tr><th>Setting</th><th>Freq. compensation loop gain before sync word</th></tr>
<tr><td>0 (00)</td><td>$K$</td></tr>
<tr><td>1 (01)</td><td>$2K$</td></tr>
<tr><td>2 (10)</td><td>$3K$</td></tr>
<tr><td>3 (11)</td><td>$4K$</td></tr>
</table></td></tr>
<tr><td>2</td><td>FOC_POST_K</td><td>1</td><td>R/W</td><td>The frequency compensation loop gain to be used after a sync word is detected.
<table>
<tr><th>Setting</th><th>Freq. compensation loop gain after sync word</th></tr>
<tr><td>0</td><td>Same as FOC_PRE_K</td></tr>
<tr><td>1</td><td>$K/2$</td></tr>
</table></td></tr>
<tr><td>1:0</td><td>FOC_LIMIT[1:0]</td><td>2 (10)</td><td>R/W</td><td>The saturation point for the frequency offset compensation algorithm:
<table>
<tr><th>Setting</th><th>Saturation point (max compensated offset)</th></tr>
<tr><td>0 (00)</td><td>±0 (no frequency offset compensation)</td></tr>
<tr><td>1 (01)</td><td>$\pm BW_{CHAN}/8$</td></tr>
<tr><td>2 (10)</td><td>$\pm BW_{CHAN}/4$</td></tr>
<tr><td>3 (11)</td><td>$\pm BW_{CHAN}/2$</td></tr>
</table>
Frequency offset compensation is not supported for OOK; Always use FOC_LIMIT=0 with this modulation format.</td></tr>
</table>

## 0x1A: BSCFG – Bit Synchronization Configuration

<table>
<tr><th>Bit</th><th>Field Name</th><th>Reset</th><th>R/W</th><th>Description</th></tr>
<tr><td>7:6</td><td>BS_PRE_KI[1:0]</td><td>1 (01)</td><td>R/W</td><td>The clock recovery feedback loop integral gain to be used before a sync word is detected (used to correct offsets in data rate):
<table>
<tr><th>Setting</th><th>Clock recovery loop integral gain before sync word</th></tr>
<tr><td>0 (00)</td><td>$K_I$</td></tr>
<tr><td>1 (01)</td><td>$2K_I$</td></tr>
<tr><td>2 (10)</td><td>$3K_I$</td></tr>
<tr><td>3 (11)</td><td>$4K_I$</td></tr>
</table></td></tr>
<tr><td>5:4</td><td>BS_PRE_KP[1:0]</td><td>2 (10)</td><td>R/W</td><td>The clock recovery feedback loop proportional gain to be used before a sync word is detected.
<table>
<tr><th>Setting</th><th>Clock recovery loop proportional gain before sync word</th></tr>
<tr><td>0 (00)</td><td>$K_P$</td></tr>
<tr><td>1 (01)</td><td>$2K_P$</td></tr>
<tr><td>2 (10)</td><td>$3K_P$</td></tr>
<tr><td>3 (11)</td><td>$4K_P$</td></tr>
</table></td></tr>
<tr><td>3</td><td>BS_POST_KI</td><td>1</td><td>R/W</td><td>The clock recovery feedback loop integral gain to be used after a sync word is detected.
<table>
<tr><th>Setting</th><th>Clock recovery loop integral gain after sync word</th></tr>
<tr><td>0</td><td>Same as BS_PRE_KI</td></tr>
<tr><td>1</td><td>$K_I/2$</td></tr>
</table></td></tr>
<tr><td>2</td><td>BS_POST_KP</td><td>1</td><td>R/W</td><td>The clock recovery feedback loop proportional gain to be used after a sync word is detected.
<table>
<tr><th>Setting</th><th>Clock recovery loop proportional gain after sync word</th></tr>
<tr><td>0</td><td>Same as BS_PRE_KP</td></tr>
<tr><td>1</td><td>$K_P$</td></tr>
</table></td></tr>
<tr><td>1:0</td><td>BS_LIMIT[1:0]</td><td>0 (00)</td><td>R/W</td><td>The saturation point for the data rate offset compensation algorithm:
<table>
<tr><th>Setting</th><th>Data rate offset saturation (max data rate difference)</th></tr>
<tr><td>0 (00)</td><td>±0 (No data rate offset compensation performed)</td></tr>
<tr><td>1 (01)</td><td>±3.125% data rate offset</td></tr>
<tr><td>2 (10)</td><td>±6.25% data rate offset</td></tr>
<tr><td>3 (11)</td><td>±12.5% data rate offset</td></tr>
</table></td></tr>
</table>

## 0x1B: AGCCTRL2 – AGC Control

<table>
<tr><th>Bit</th><th>Field Name</th><th>Reset</th><th>R/W</th><th>Description</th></tr>
<tr><td>7:6</td><td>MAX_DVGA_GAIN[1:0]</td><td>0 (00)</td><td>R/W</td><td>Reduces the maximum allowable DVGA gain.
<table>
<tr><th>Setting</th><th>Allowable DVGA settings</th></tr>
<tr><td>0 (00)</td><td>All gain settings can be used</td></tr>
<tr><td>1 (01)</td><td>The highest gain setting can not be used</td></tr>
<tr><td>2 (10)</td><td>The 2 highest gain settings can not be used</td></tr>
<tr><td>3 (11)</td><td>The 3 highest gain settings can not be used</td></tr>
</table></td></tr>
<tr><td>5:3</td><td>MAX_LNA_GAIN[2:0]</td><td>0 (000)</td><td>R/W</td><td>Sets the maximum allowable LNA + LNA 2 gain relative to the maximum possible gain.
<table>
<tr><th>Setting</th><th>Maximum allowable LNA + LNA 2 gain</th></tr>
<tr><td>0 (000)</td><td>Maximum possible LNA + LNA 2 gain</td></tr>
<tr><td>1 (001)</td><td>Approx. 2.6 dB below maximum possible gain</td></tr>
<tr><td>2 (010)</td><td>Approx. 6.1 dB below maximum possible gain</td></tr>
<tr><td>3 (011)</td><td>Approx. 7.4 dB below maximum possible gain</td></tr>
<tr><td>4 (100)</td><td>Approx. 9.2 dB below maximum possible gain</td></tr>
<tr><td>5 (101)</td><td>Approx. 11.5 dB below maximum possible gain</td></tr>
<tr><td>6 (110)</td><td>Approx. 14.6 dB below maximum possible gain</td></tr>
<tr><td>7 (111)</td><td>Approx. 17.1 dB below maximum possible gain</td></tr>
</table></td></tr>
<tr><td>2:0</td><td>MAGN_TARGET[2:0]</td><td>3 (011)</td><td>R/W</td><td>These bits set the target value for the averaged amplitude from the digital channel filter (1 LSB = 0 dB).
<table>
<tr><th>Setting</th><th>Target amplitude from channel filter</th></tr>
<tr><td>0 (000)</td><td>24 dB</td></tr>
<tr><td>1 (001)</td><td>27 dB</td></tr>
<tr><td>2 (010)</td><td>30 dB</td></tr>
<tr><td>3 (011)</td><td>33 dB</td></tr>
<tr><td>4 (100)</td><td>36 dB</td></tr>
<tr><td>5 (101)</td><td>38 dB</td></tr>
<tr><td>6 (110)</td><td>40 dB</td></tr>
<tr><td>7 (111)</td><td>42 dB</td></tr>
</table></td></tr>
</table>

## 0x1C: AGCCTRL1 – AGC Control

<table>
<tr><th>Bit</th><th>Field Name</th><th>Reset</th><th>R/W</th><th>Description</th></tr>
<tr><td>7</td><td>Reserved</td><td></td><td>R0</td><td></td></tr>
<tr><td>6</td><td>AGC_LNA_PRIORITY</td><td>1</td><td>R/W</td><td>Selects between two different strategies for LNA and LNA2 gain adjustment. When 1, the LNA gain is decreased first. When 0, the LNA2 gain is decreased to minimum before decreasing LNA gain.</td></tr>
<tr><td>5:4</td><td>CARRIER_SENSE_REL_THR[1:0]</td><td>0 (00)</td><td>R/W</td><td>Sets the relative change threshold for asserting carrier sense.
<table>
<tr><th>Setting</th><th>Carrier sense relative threshold</th></tr>
<tr><td>0 (00)</td><td>Relative carrier sense threshold disabled</td></tr>
<tr><td>1 (01)</td><td>6 dB increase in RSSI value</td></tr>
<tr><td>2 (10)</td><td>10 dB increase in RSSI value</td></tr>
<tr><td>3 (11)</td><td>14 dB increase in RSSI value</td></tr>
</table></td></tr>
<tr><td>3:0</td><td>CARRIER_SENSE_ABS_THR[3:0]</td><td>0 (0000)</td><td>R/W</td><td>Sets the absolute RSSI threshold for asserting carrier sense. The 2’s complement signed threshold is programmed in steps of 1 dB and is relative to the MAGN_TARGET setting.
<table>
<tr><th>Setting</th><th>Carrier sense absolute threshold<br>(Equal to channel filter amplitude when AGC has not decreased gain)</th></tr>
<tr><td>-8 (1000)</td><td>Absolute carrier sense threshold disabled</td></tr>
<tr><td>-7 (1001)</td><td>7 dB below MAGN_TARGET setting</td></tr>
<tr><td>…</td><td>…</td></tr>
<tr><td>-1 (1111)</td><td>1 dB below MAGN_TARGET setting</td></tr>
<tr><td>0 (0000)</td><td>At MAGN_TARGET setting</td></tr>
<tr><td>1 (0001)</td><td>1 dB above MAGN_TARGET setting</td></tr>
<tr><td>…</td><td>…</td></tr>
<tr><td>7 (0111)</td><td>7 dB above MAGN_TARGET setting</td></tr>
</table></td></tr>
</table>

## 0x1D: AGCCTRL0 – AGC Control

| Bit | Field Name | Reset | R/W | Description |
|---|---|---|---|---|
| 7:6 | HYST_LEVEL[1:0] | 2 (10) | R/W | Sets the level of hysteresis on the magnitude deviation (internal AGC signal that determines gain changes).<br>Setting / Description<br>0 (00): No hysteresis, small symmetric dead zone, high gain<br>1 (01): Low hysteresis, small asymmetric dead zone, medium gain<br>2 (10): Medium hysteresis, medium asymmetric dead zone, medium gain<br>3 (11): Large hysteresis, large asymmetric dead zone, low gain |
| 5:4 | WAIT_TIME[1:0] | 1 (01) | R/W | Sets the number of channel filter samples from a gain adjustment has been made until the AGC algorithm starts accumulating new samples.<br>Setting / Channel filter samples<br>0 (00): 8<br>1 (01): 16<br>2 (10): 24<br>3 (11): 32 |
| 3:2 | AGC_FREEZE[1:0] | 0 (00) | R/W | Controls when the AGC gain should be frozen.<br>Setting / Function<br>0 (00): Normal operation. Always adjust gain when required.<br>1 (01): The gain setting is frozen when a sync word has been found.<br>2 (10): Manually freezes the analog gain setting and continue to adjust the digital gain.<br>3 (11): Manually freezes both the analog and the digital gain settings. Used for manually overriding the gain. |
| 1:0 | FILTER_LENGTH[1:0] | 1 (01) | R/W | Sets the averaging length for the amplitude from the channel filter. Sets the OOK decision boundary for OOK reception.<br>Setting / Channel filter samples / OOK decision<br>0 (00): 8 / 4 dB<br>1 (01): 16 / 8 dB<br>2 (10): 32 / 12 dB<br>3 (11): 64 / 16 dB |

## 0x1E: WOREVT1 – High Byte Event0 Timeout

| Bit | Field Name | Reset | R/W | Description |
|---|---|---|---|---|
| 7:0 | EVENT0[15:8] | 135 (0x87) | R/W | High byte of Event 0 timeout register<br>$t_{Event0} = \frac{750}{f_{XOSC}} \cdot EVENT0 \cdot 2^{5 \cdot WOR_RES}$ |

### 0x1F: WOREVT0 – Low Byte Event0 Timeout

| Bit | Field Name | Reset | R/W | Description |
|---|---|---|---|---|
| 7:0 | EVENT0[7:0] | 107 (0x6B) | R/W | Low byte of Event 0 timeout register.<br>The default Event 0 value gives 1.0 s timeout, assuming a 26.0 MHz crystal. |

### 0x20: WORCTRL – Wake On Radio Control

| Bit | Field Name | Reset | R/W | Description |
|---|---|---|---|---|
| 7 | RC_PD | 1 | R/W | Power down signal to RC oscillator. When written to 0, automatic initial calibration will be performed |
| 6:4 | EVENT1[2:0] | 7 (111) | R/W | Timeout setting from register block. Decoded to Event 1 timeout. RC oscillator clock frequency equals $F_{XOSC}$/750, which is 34.7-36 kHz, depending on crystal frequency. The table below lists the number of clock periods after Event 0 before Event 1 times out.<br>Setting: t_event1<br>0 (000): 4 (0.111 – 0.115 ms)<br>1 (001): 6 (0.167 – 0.173 ms)<br>2 (010): 8 (0.222 – 0.230 ms)<br>3 (011): 12 (0.333 – 0.346 ms)<br>4 (100): 16 (0.444 – 0.462 ms)<br>5 (101): 24 (0.667 – 0.692 ms)<br>6 (110): 32 (0.889 – 0.923 ms)<br>7 (111): 48 (1.333 – 1.385 ms) |
| 3 | RC_CAL | 1 | R/W | Enables (1) or disables (0) the RC oscillator calibration. |
| 2 | Reserved | | R0 | |
| 1:0 | WOR_RES[1:0] | 0 (00) | R/W | Controls the Event 0 resolution as well as maximum timeout of the WOR module and maximum timeout under normal RX operation:<br>Setting: Resolution (1 LSB): Max timeout<br>0 (00): 1 period (28 – 29 µs): 1.8 – 1.9 seconds<br>1 (01): $2^5$ periods (0.89 – 0.92 ms): 58 – 61 seconds<br>2 (10): $2^{10}$ periods (28 – 30 ms): 31 – 32 minutes<br>3 (11): $2^{15}$ periods (0.91 – 0.94 s): 16.5 – 17.2 hours<br>Note that WOR_RES should be 0 or 1 when using WOR because WOR_RES > 1 will give a very low duty cycle.<br>In normal RX operation all settings of WOR_RES can be used. |

### 0x21: FREND1 – Front End RX Configuration

| Bit | Field Name | Reset | R/W | Description |
|---|---|---|---|---|
| 7:6 | LNA_CURRENT[1:0] | 1 (01) | R/W | Adjusts front-end LNA PTAT current output |
| 5:4 | LNA2MIX_CURRENT[1:0] | 1 (01) | R/W | Adjusts front-end PTAT outputs |
| 3:2 | LODIV_BUF_CURRENT_RX[1:0] | 1 (01) | R/W | Adjusts current in RX LO buffer (LO input to mixer) |
| 1:0 | MIX_CURRENT[1:0] | 2 (10) | R/W | Adjusts current in mixer |

### 0x22: FREND0 – Front End TX configuration

| Bit | Field Name | Reset | R/W | Description |
|---|---|---|---|---|
| 7:6 | Reserved | | R0 | |
| 5:4 | LODIV_BUF_CURRENT_TX[1:0] | 1 (01) | R/W | Adjusts current TX LO buffer (input to PA). The value to use in this field is given by the SmartRF® Studio software [5]. |
| 3 | Reserved | | R0 | |
| 2:0 | PA_POWER[2:0] | 0 (000) | R/W | Selects PA power setting. This value is an index to the PATABLE. In OOK mode, this selects the PATABLE index to use when transmitting a '1'. PATABLE index zero is used in OOK when transmitting a '0'. |

### 0x23: FSCAL3 – Frequency Synthesizer Calibration

| Bit | Field Name | Reset | R/W | Description |
|---|---|---|---|---|
| 7:6 | FSCAL3[7:6] | 2 (10) | R/W | Frequency synthesizer calibration configuration. The value to write in this register before calibration is given by the SmartRF® Studio software [5]. |
| 5:4 | CHP_CURR_CAL_EN[1:0] | 2 (10) | R/W | Disable charge pump calibration stage when 0 |
| 3:0 | FSCAL3[3:0] | 9 (1001) | R/W | Frequency synthesizer calibration result register. Digital bit vector defining the charge pump output current, on an exponential scale: $IOUT=I_0 \cdot 2^{FSCAL3[3:0]/4}$<br>Fast frequency hopping without calibration for each hop can be done by calibrating upfront for each frequency and saving the resulting FSCAL3, FSCAL2 and FSCAL1 register values. Between each frequency hop, calibration can be replaced by writing the FSCAL3, FSCAL2 and FSCAL1 register values corresponding to the next RF frequency. |

### 0x24: FSCAL2 – Frequency Synthesizer Calibration

| Bit | Field Name | Reset | R/W | Description |
|---|---|---|---|---|
| 7:6 | Reserved | | R0 | |
| 5 | VCO_CORE_H_EN | 0 | R/W | Choose high (1) / low (0) VCO |
| 4:0 | FSCAL2[4:0] | 10 (0x0A) | R/W | Frequency synthesizer calibration result register. VCO current calibration result and override value<br>Fast frequency hopping without calibration for each hop can be done by calibrating upfront for each frequency and saving the resulting FSCAL3, FSCAL2 and FSCAL1 register values. Between each frequency hop, calibration can be replaced by writing the FSCAL3, FSCAL2 and FSCAL1 register values corresponding to the next RF frequency. |

### 0x25: FSCAL1 – Frequency Synthesizer Calibration

| Bit | Field Name | Reset | R/W | Description |
|---|---|---|---|---|
| 7:6 | Reserved | | R0 | |
| 5:0 | FSCAL1[5:0] | 32 (0x20) | R/W | Frequency synthesizer calibration result register. Capacitor array setting for VCO coarse tuning.<br>Fast frequency hopping without calibration for each hop can be done by calibrating upfront for each frequency and saving the resulting FSCAL3, FSCAL2 and FSCAL1 register values. Between each frequency hop, calibration can be replaced by writing the FSCAL3, FSCAL2 and FSCAL1 register values corresponding to the next RF frequency. |

### 0x26: FSCAL0 – Frequency Synthesizer Calibration

| Bit | Field Name | Reset | R/W | Description |
|---|---|---|---|---|
| 7 | Reserved | | R0 | |
| 6:0 | FSCAL0[6:0] | 13 (0x0D) | R/W | Frequency synthesizer calibration control. The value to use in this register is given by the SmartRF® Studio software [5]. |

### 0x27: RCCTRL1 – RC Oscillator Configuration

| Bit | Field Name | Reset | R/W | Description |
|---|---|---|---|---|
| 7 | Reserved | 0 | R0 | |
| 6:0 | RCCTRL1[6:0] | 65 (0x41) | R/W | RC oscillator configuration. |

### 0x28: RCCTRL0 – RC Oscillator Configuration

| Bit | Field Name | Reset | R/W | Description |
|---|---|---|---|---|
| 7 | Reserved | 0 | R0 | |
| 6:0 | RCCTRL0[6:0] | 0 (0x00) | R/W | RC oscillator configuration. |

## 32.2 Configuration Register Details – Registers that Lose Programming in SLEEP State

### 0x29: FSTEST – Frequency Synthesizer Calibration Control

| Bit | Field Name | Reset | R/W | Description |
|---|---|---|---|---|
| 7:0 | FSTEST[7:0] | 89 (0x59) | R/W | For test only. Do not write to this register. |

### 0x2A: PTEST – Production Test

| Bit | Field Name | Reset | R/W | Description |
|---|---|---|---|---|
| 7:0 | PTEST[7:0] | 127 (0x7F) | R/W | Writing 0xBF to this register makes the on-chip temperature sensor available in the IDLE state. The default 0x7F value should then be written back before leaving the IDLE state.<br>Other use of this register is for test only. |

### 0x2B: AGCTEST – AGC Test

| Bit | Field Name | Reset | R/W | Description |
|---|---|---|---|---|
| 7:0 | AGCTEST[7:0] | 63 (0x3F) | R/W | For test only. Do not write to this register. |

### 0x2C: TEST2 – Various Test Settings

| Bit | Field Name | Reset | R/W | Description |
|---|---|---|---|---|
| 7:0 | TEST2[7:0] | 136 (0x88) | R/W | Set to 0x81 for improved sensitivity at data rates ≤100 kBaud. The temperature range is then from 0°C to +85°C. |

### 0x2D: TEST1 – Various Test Settings

| Bit | Field Name | Reset | R/W | Description |
|---|---|---|---|---|
| 7:0 | TEST1[7:0] | 49 (0x31) | R/W | Set to 0x35 for improved sensitivity at data rates ≤100 kBaud. The temperature range is then from 0°C to +85°C. |

### 0x2E: TEST0 – Various Test Settings

| Bit | Field Name | Reset | R/W | Description |
|---|---|---|---|---|
| 7:2 | TEST0[7:2] | 2 (0x02) | R/W | The value to use in this register is given by the SmartRF® Studio software [5]. |
| 1 | VCO_SEL_CAL_EN | 1 | R/W | Enable VCO selection calibration stage when 1 |
| 0 | TEST0[0] | 1 | R/W | The value to use in this register is given by the SmartRF® Studio software [5]. |

## 32.3 Status Register Details

### 0x30 (0xF0): PARTNUM – Chip ID

| Bit | Field Name | Reset | R/W | Description |
|---|---|---|---|---|
| 7:0 | PARTNUM[7:0] | 128 (0x80) | R | Chip part number |

### 0x31 (0xF1): VERSION – Chip ID

| Bit | Field Name | Reset | R/W | Description |
|---|---|---|---|---|
| 7:0 | VERSION[7:0] | 3 (0x03) | R | Chip version number. |

### 0x32 (0xF2): FREQEST – Frequency Offset Estimate from Demodulator

| Bit | Field Name | Reset | R/W | Description |
|---|---|---|---|---|
| 7:0 | FREQOFF_EST | | R | The estimated frequency offset (2's complement) of the carrier. Resolution is $F_{XTAL}/2^{14}$ (1.59 - 1.65 kHz); range is ±202 kHz to ±210 kHz, dependent of XTAL frequency.<br><br>Frequency offset compensation is only supported for 2-FSK; GFSK and MSK modulation. This register will read 0 when using OOK modulation. |

### 0x33 (0xF3): LQI – Demodulator Estimate for Link Quality

| Bit | Field Name | Reset | R/W | Description |
|---|---|---|---|---|
| 7 | CRC_OK | | R | The last CRC comparison matched. Cleared when entering/restarting RX mode. Only valid if PKTCTRL0.CC2400_EN=1. |
| 6:0 | LQI_EST[6:0] | | R | The Link Quality Indicator estimates how easily a received signal can be demodulated. Calculated over the 64 symbols following the sync word. |

### 0x34 (0xF4): RSSI – Received Signal Strength Indication

| Bit | Field Name | Reset | R/W | Description |
|---|---|---|---|---|
| 7:0 | RSSI | | R | Received signal strength indicator |

### 0x35 (0xF5): MARCSTATE – Main Radio Control State Machine State

| Bit | Field Name | Reset | R/W | Description |
|---|---|---|---|---|
| 7:5 | Reserved | | R0 | |
| 4:0 | MARC_STATE[4:0] | | R | Main Radio Control FSM State |

| Value | State name | State (Figure 15, page 39) |
|---|---|---|
| 0 (0x00) | SLEEP | SLEEP |
| 1 (0x01) | IDLE | IDLE |
| 2 (0x02) | XOFF | XOFF |
| 3 (0x03) | VCOON_MC | MANCAL |
| 4 (0x04) | REGON_MC | MANCAL |
| 5 (0x05) | MANCAL | MANCAL |
| 6 (0x06) | VCOON | FS_WAKEUP |
| 7 (0x07) | REGON | FS_WAKEUP |
| 8 (0x08) | STARTCAL | CALIBRATE |
| 9 (0x09) | BWBOOST | SETTLING |
| 10 (0x0A) | FS_LOCK | SETTLING |
| 11 (0x0B) | IFADCON | SETTLING |
| 12 (0x0C) | ENDCAL | CALIBRATE |
| 13 (0x0D) | RX | RX |
| 14 (0x0E) | RX_END | RX |
| 15 (0x0F) | RX_RST | RX |
| 16 (0x10) | TXRX_SWITCH | TXRX_SETTLING |
| 17 (0x11) | RXFIFO_OVERFLOW | RXFIFO_OVERFLOW |
| 18 (0x12) | FSTXON | FSTXON |
| 19 (0x13) | TX | TX |
| 20 (0x14) | TX_END | TX |
| 21 (0x15) | RXTX_SWITCH | RXTX_SETTLING |
| 22 (0x16) | TXFIFO_UNDERFLOW | TXFIFO_UNDERFLOW |

Note: it is not possible to read back the SLEEP or XOFF state numbers because setting CSn low will make the chip enter the IDLE mode from the SLEEP or XOFF states.

### 0x36 (0xF6): WORTIME1 – High Byte of WOR Time

| Bit | Field Name | Reset | R/W | Description |
|---|---|---|---|---|
| 7:0 | TIME[15:8] | | R | High byte of timer value in WOR module |

### 0x37 (0xF7): WORTIME0 – Low Byte of WOR Time

| Bit | Field Name | Reset | R/W | Description |
|---|---|---|---|---|
| 7:0 | TIME[7:0] | | R | Low byte of timer value in WOR module |

### 0x38 (0xF8): PKTSTATUS – Current GDOx Status and Packet Status

| Bit | Field Name | Reset | R/W | Description |
|---|---|---|---|---|
| 7 | CRC_OK | | R | The last CRC comparison matched. Cleared when entering/restarting RX mode. Only valid if PKTCTRL0.CC2400_EN=1. |
| 6 | CS | | R | Carrier sense |
| 5 | PQT_REACHED | | R | Preamble Quality reached |
| 4 | CCA | | R | Channel is clear |
| 3 | SFD | | R | Sync word found |
| 2 | GDO2 | | R | Current GDO2 value. Note: the reading gives the non-inverted value irrespective what IOCFG2.GDO2_INV is programmed to.<br>It is not recommended to check for PLL lock by reading PKTSTATUS[2] with GDO2_CFG=0x0A. |
| 1 | Reserved | | R0 | |
| 0 | GDO0 | | R | Current GDO0 value. Note: the reading gives the non-inverted value irrespective what IOCFG0.GDO0_INV is programmed to.<br>It is not recommended to check for PLL lock by reading PKTSTATUS[0] with GDO0_CFG=0x0A. |

### 0x39 (0xF9): VCO_VC_DAC – Current Setting from PLL Calibration Module

| Bit | Field Name | Reset | R/W | Description |
|---|---|---|---|---|
| 7:0 | VCO_VC_DAC[7:0] | | R | Status register for test only |

### 0x3A (0xFA): TXBYTES – Underflow and Number of Bytes

| Bit | Field Name | Reset | R/W | Description |
|---|---|---|---|---|
| 7 | TXFIFO_UNDERFLOW | | R | |
| 6:0 | NUM_TXBYTES | | R | Number of bytes in TX FIFO |

### 0x3B (0xFB): RXBYTES – Underflow and Number of Bytes

| Bit | Field Name | Reset | R/W | Description |
|---|---|---|---|---|
| 7 | RXFIFO_OVERFLOW | | R | |
| 6:0 | NUM_RXBYTES | | R | Number of bytes in RX FIFO |

### 0x3C (0xFC): RCCTRL1_STATUS – Last RC Oscillator Calibration Result

| Bit | Field Name | Reset | R/W | Description |
|---|---|---|---|---|
| 7 | Reserved | | R0 | |
| 6:0 | RCCTRL1_STATUS[6:0] | | R | Contains the value from the last run of the RC oscillator calibration routine.<br>For usage description refer to AN047 [3]. |

### 0x3D (0xFC): RCCTRL0_STATUS – Last RC Oscillator Calibration Result

| Bit | Field Name | Reset | R/W | Description |
|---|---|---|---|---|
| 7 | Reserved | | R0 | |
| 6:0 | RCCTRL0_STATUS[6:0] | | R | Contains the value from the last run of the RC oscillator calibration routine.<br>For usage description refer to AN047 [3]. |

# 33 Package Description (QFN 20)

## 33.1 Recommended PCB Layout for Package (QFN 20)

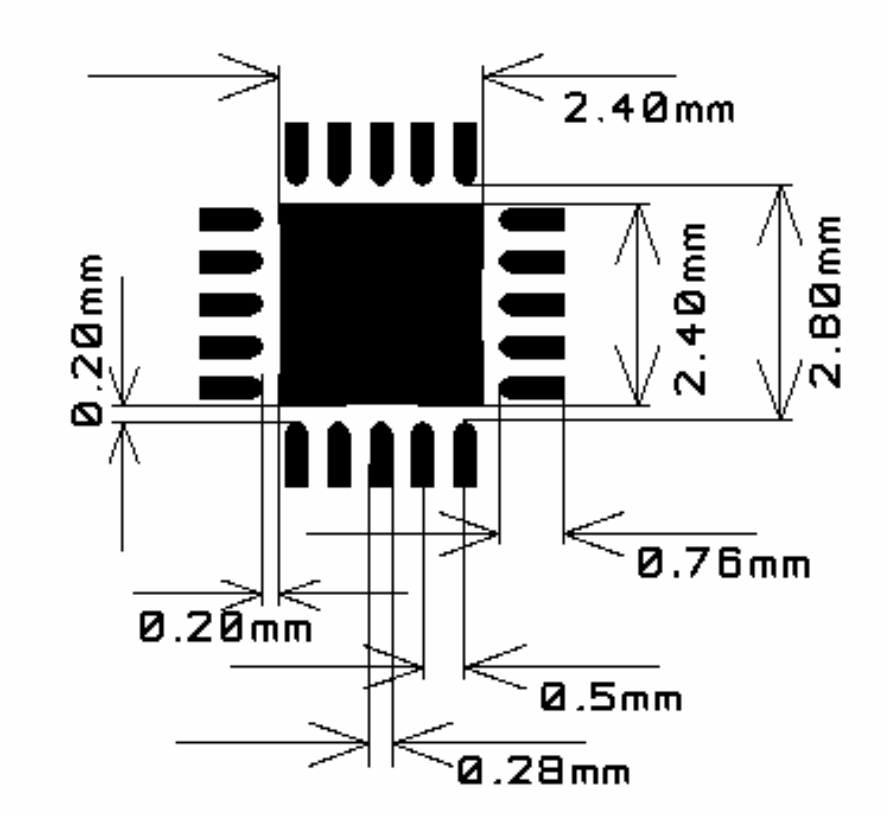


**Figure 30: Recommended PCB Layout for QFN 20 Package**

Note: The figure is an illustration only and not to scale. There are five 10 mil diameter via holes distributed symmetrically in the ground pad under the package. See also the CC2500EM reference design [4].

## 33.2 Soldering Information

The recommendations for lead-free reflow in IPC/JEDE J-STD-020D should be followed.

## 34 Ordering Information

| Orderable Device | Status (1) | Package Type | Package Drawing | Pins | Package Qty | Eco Plan (2) | Lead Finish | MSL Peak Temp (3) |
|---|---|---|---|---|---|---|---|---|
| CC2500RTKR | Active | QFN | RTK | 20 | 3000 | Green (RoHS & no Sb/Br) | Cu NiPdAu | LEVEL3-260C 1 YEAR |
| CC2500RTK | Active | QFN | RTK | 20 | 92 | Green (RoHS & no Sb/Br) | Cu NiPdAu | LEVEL3-260C 1 YEAR |

| Orderable Evaluation Module | Description | Minimum Order Quantity |
|---|---|---|
| **CC2500-CC2550**DK | **CC2500_CC2550** Development Kit | 1 |
| **CC2500**EMK | **CC1101** Development Kit | 1 |

**Figure 31: Ordering Information**

(1) The marketing status values are defined as follows:
**ACTIVE:** Product device recommended for new designs.
**LIFEBUY:** TI has announced that the device will be discontinued, and a lifetime-buy period is in effect.
**NRND:** Not recommended for new designs. Device is in production to support existing customers, but TI does not recommend using this part in a new design.
**PREVIEW:** Device has been announced but is not in production. Samples may or may not be available.
**OBSOLETE:** TI has discontinued the production of the device.

(2) Eco Plan - The planned eco-friendly classification: Pb-Free (RoHS), Pb-Free (RoHS Exempt), or Green (RoHS & no Sb/Br) - please check http://www.ti.com/productcontent for the latest availability information and additional product content details.
**TBD:** The Pb-Free/Green conversion plan has not been defined.
**Pb-Free (RoHS):** TI's terms "Lead-Free" or "Pb-Free" mean semiconductor products that are compatible with the current RoHS requirements for all 6 substances, including the requirement that lead not exceed 0.1% by weight in homogeneous materials. Where designed to be soldered at high temperatures, TI Pb-Free products are suitable for use in specified lead-free processes.
**Pb-Free (RoHS Exempt):** This component has a RoHS exemption for either 1) lead-based flip-chip solder bumps used between the die and package, or 2) lead-based die adhesive used between the die and leadframe. The component is otherwise considered Pb-Free (RoHS compatible) as defined above.
**Green (RoHS & no Sb/Br):** TI defines "Green" to mean Pb-Free (RoHS compatible), and free of Bromine (Br) and Antimony (Sb) based flame retardants (Br or Sb do not exceed 0.1% by weight in homogeneous material)

(3) MSL, Peak Temp. -- The Moisture Sensitivity Level rating according to the JEDEC industry standard classifications, and peak solder temperature.

**Important Information and Disclaimer:**The information provided on this page represents TI's knowledge and belief as of the date that it is provided. TI bases its knowledge and belief on information provided by third parties, and makes no representation or warranty as to the accuracy of such information. Efforts are underway to better integrate information from third parties. TI has taken and continues to take reasonable steps to provide representative and accurate information but may not have conducted destructive testing or chemical analysis on incoming materials and chemicals. TI and TI suppliers consider certain information to be proprietary, and thus CAS numbers and other limited information may not be available for release.

In no event shall TI's liability arising out of such information exceed the total purchase price of the TI part(s) at issue in this document sold by TI to Customer on an annual basis.

## 35 References

[1] CC2500 Errata Notes (swrz002.pdf)

[2] AN032 2.4 GHz Regulations (swra060.pdf)

[3] AN047 CC1100/CC2500 – Wake-On-Radio (swra126.pdf)

[4] CC2500EM Reference Design 1.0 (swrr016.zip)

[5] SmartRF® Studio (swrc046.zip)

[6] CC1100 CC2500 Examples Libraries (swrc021.zip)

[7] CC1100/CC1150DK & CC2500/CC2550DK Development Kit Examples & Libraries User Manual (swru109.pdf)

[8] CC25XX Folded Dipole Reference Design (swrc065.zip)

[9] DN004 Folded Dipole Antenna for CCC25xx (swra118.pdf)

# 36 General Information

## 36.1 Document History

| Revision | Date | Description/Changes |
|---|---|---|
| SWRS040C | 2008-05-04 | Updated package and ordering information. |
| SWRS040B | 2007-05-09 | kbps replaced by kBaud throughout the document.<br>Some of the sections have been re-written to be easier to read without having any new info added.<br>Absolute maximum supply voltage rating increased from 3.6 V to 3.9 V.<br>FSK changed to 2-FSK throughout the document.<br>Updates to the Abbreviation table.<br>Updates to the Electrical Specifications section. Added ACP, OBW and blocking performance.<br>Maximum output power changed from 0 dBm to +1 dBm.<br>Added information about reduced link performance at n/2·crystal frequency.<br>Added info about RX and TX latency in serial mode.<br>Changes to the maximum RC oscillator frequency accuracy after calibration.<br>Added info about default values after reset versus optimum register settings in the Configuration Software section.<br>Changes to the SPI Interface Timing Requirements. Info added about $t_{sp,pd}$<br>The following figures have been changed: Configuration Registers Write and Read Operations, SRES Command Strobe, and Register Access Types.<br>In the Register Access section, the address range is changed.<br>Changes to PATABLE Access section.<br>In the Packet Format section, preamble pattern is changed to 10101010 and info about bug related to turning off the transmitter in infinite packet length mode is added.<br>Added info to the Frequency Offset Compensation section.<br>Added info about the initial value of the PN9 sequence in the Data Whitening section.<br>Added info about TX FIFO underflow state in the Packet Handling in Transmit Mode section.<br>Added section Packet Handling in Firmware.<br>In the PQT section a change is made as to how much the counter decreases.<br>The RSSI value is in dBm and not dB.<br>The whole CS Absolute Threshold section has been re-written and the equation calculating the threshold has been removed.<br>Added info in the CCA section on what happens if the channel is not clear.<br>Added info to the LQI section for better understanding.<br>Removed all references to the voltage regulator in relation with the CHP_RDYn signal, as this signal is only related to the crystal.<br>Removed references to the voltage regulator in the figures: Power-On Reset and Power-On Reset with SRES. Changes to the SI line in the Power-On Reset with SRES figure.<br>Added info on the three automatic calibration options.<br>Added info about minimum sleep time and references to App. Note 047 together with info about calibration of the RC oscillator.<br>The figure Event 0 and Event 1 Relationship is changed for better readability.<br>Info added to the RC Oscillator and Timing section related to reduced calibration time.<br>The Output Power Programming section has been changed. Only 1 PATABLE entry used for 2-FSK/GFSK/MSK and 2 PATABLE entries used for OOK. Added info about PATABLE when entering SLEEP mode. New PA_POWER and PATABLE figure.<br>Added section on PCB Layout Recommendations.<br>In section General Purpose / Test Output Control Pins: Added info on GDO pins in SLEEP state.<br>Asynchronous transparent mode is called asynchronous serial mode throughout the document.<br>Removed comments about having to use NRZ coding in synchronous serial mode.<br>Added info that Manchester encoding cannot be used in asynchronous serial mode.<br>Changed number of commands strobes from 14 to 13.<br>Added two new registers; RCCTRL1_STATUS and RCCTRL0_STATUS<br>Changed field name and/or description of the following registers:<br>MCSM2, MCSM0, WORCTRL, FSCAL3, FSCAL2, FSCAL1, TEST2, TEST1 and TEST0.<br>Added references. |

| Revision | Date | Description/Changes |
|---|---|---|
| 1.2<br>SWRS040A | 2006-06-28 | Added figures to table on SPI interface timing requirements.<br>Added information about SPI read.<br>Updates to text and included new figure in section on arbitrary length configuration.<br>Updates to section on CRC check. Added information about CRC check when PKTCTRL0.CC2400_EN=1.<br>Added information on RSSI update rate in section RSSI.<br>Updates to text and included new figures in section on power-on start-up sequence.<br>Changes to wake-on-radio current consumption figures under electrical specifications.<br>Updates to text in section on data FIFO.<br>Added information about how to check for PLL lock in section on VCO.<br>Better explanation of some of the signals in table of GDO signal selection. Also added some more signals.<br>Added section on wideband modulation not using spread spectrum under section on system considerations and guidelines.<br>Changes to timeout for sync word search in RX in register MCSM2.<br>Changes to wake-on-radio control register WORCTRL. WOR_RES[1:0] settings $10_b$ and $11_b$ changed to Not Applicable (NA).<br>Added more detailed information on PO_TIMEOUT in register MCSM0.<br>Added description of programming bits in registers FOCCFG, BSCFG, AGCCTRL0, FREND1.<br>Changes to ordering information. |
| 1.1 | 2005-10-20 | MDMCFG2[7] used. 26-27 MHz crystal range. Chapter 15: description of the 2 optional append bytes. Added matching information. Added information about using a reference signal instead of a crystal. CRC can only be checked by append bytes or CRC_AUTOFLUSH. Added equation for calculating RSSI in dBm. Selectivity performance graphs added. |
| 1.0 | 2005-01-24 | First preliminary release. |

**Table 38: Document History**

## PACKAGING INFORMATION

| Orderable part number | Status (1) | Material type (2) | Package \| Pins | Package qty \| Carrier | RoHS (3) | Lead finish/ Ball material (4) | MSL rating/ Peak reflow (5) | Op temp (°C) | Part marking (6) |
|---|---|---|---|---|---|---|---|---|---|
| CC2500RGP | Active | Production | QFN (RGP) \| 20 | 92 \| TUBE | Yes | NIPDAU \| NIPDAUAG | Level-3-260C-168 HR | -40 to 85 | CC2500 |
| CC2500RGP.B | Active | Production | QFN (RGP) \| 20 | 92 \| TUBE | Yes | NIPDAU | Level-3-260C-168 HR | -40 to 85 | CC2500 |
| CC2500RGPR | Active | Production | QFN (RGP) \| 20 | 3000 \| LARGE T&R | Yes | NIPDAU \| NIPDAUAG | Level-3-260C-168 HR | -40 to 85 | CC2500 |
| CC2500RGPR.B | Active | Production | QFN (RGP) \| 20 | 3000 \| LARGE T&R | Yes | NIPDAU | Level-3-260C-168 HR | -40 to 85 | CC2500 |
| CC2500RGPRG4 | Active | Production | QFN (RGP) \| 20 | 3000 \| LARGE T&R | Yes | NIPDAU | Level-3-260C-168 HR | -40 to 85 | CC2500 |
| CC2500RGPRG4.B | Active | Production | QFN (RGP) \| 20 | 3000 \| LARGE T&R | Yes | NIPDAU | Level-3-260C-168 HR | -40 to 85 | CC2500 |

(1) **Status:** For more details on status, see our product life cycle.

(2) **Material type:** When designated, preproduction parts are prototypes/experimental devices, and are not yet approved or released for full production. Testing and final process, including without limitation quality assurance, reliability performance testing, and/or process qualification, may not yet be complete, and this item is subject to further changes or possible discontinuation. If available for ordering, purchases will be subject to an additional waiver at checkout, and are intended for early internal evaluation purposes only. These items are sold without warranties of any kind.

(3) **RoHS values:** Yes, No, RoHS Exempt. See the TI RoHS Statement for additional information and value definition.

(4) **Lead finish/Ball material:** Parts may have multiple material finish options. Finish options are separated by a vertical ruled line. Lead finish/Ball material values may wrap to two lines if the finish value exceeds the maximum column width.

(5) **MSL rating/Peak reflow:** The moisture sensitivity level ratings and peak solder (reflow) temperatures. In the event that a part has multiple moisture sensitivity ratings, only the lowest level per JEDEC standards is shown. Refer to the shipping label for the actual reflow temperature that will be used to mount the part to the printed circuit board.

(6) **Part marking:** There may be an additional marking, which relates to the logo, the lot trace code information, or the environmental category of the part.

Multiple part markings will be inside parentheses. Only one part marking contained in parentheses and separated by a "~" will appear on a part. If a line is indented then it is a continuation of the previous line and the two combined represent the entire part marking for that device.

**Important Information and Disclaimer:**The information provided on this page represents TI's knowledge and belief as of the date that it is provided. TI bases its knowledge and belief on information provided by third parties, and makes no representation or warranty as to the accuracy of such information. Efforts are underway to better integrate information from third parties. TI has taken and continues to take reasonable steps to provide representative and accurate information but may not have conducted destructive testing or chemical analysis on incoming materials and chemicals. TI and TI suppliers consider certain information to be proprietary, and thus CAS numbers and other limited information may not be available for release.

In no event shall TI's liability arising out of such information exceed the total purchase price of the TI part(s) at issue in this document sold by TI to Customer on an annual basis.

## TAPE AND REEL INFORMATION

**REEL DIMENSIONS**

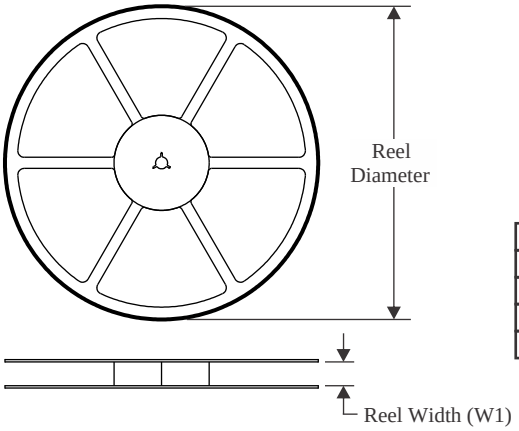


**TAPE DIMENSIONS**

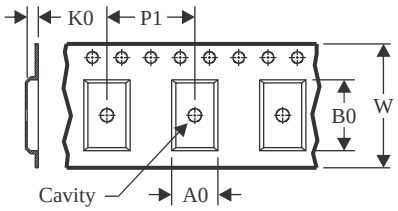


| | |
|---|---|
| A0 | Dimension designed to accommodate the component width |
| B0 | Dimension designed to accommodate the component length |
| K0 | Dimension designed to accommodate the component thickness |
| W | Overall width of the carrier tape |
| P1 | Pitch between successive cavity centers |

**QUADRANT ASSIGNMENTS FOR PIN 1 ORIENTATION IN TAPE**

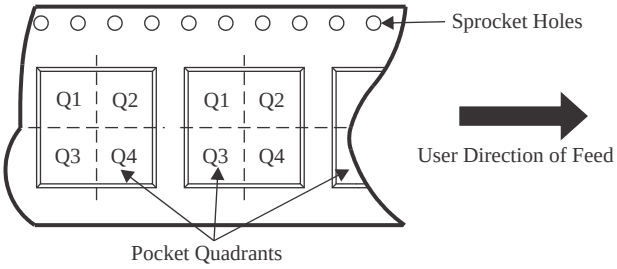


*All dimensions are nominal

| Device | Package Type | Package Drawing | Pins | SPQ | Reel Diameter (mm) | Reel Width W1 (mm) | A0 (mm) | B0 (mm) | K0 (mm) | P1 (mm) | W (mm) | Pin1 Quadrant |
|---|---|---|---|---|---|---|---|---|---|---|---|---|
| CC2500RGPRG4 | QFN | RGP | 20 | 3000 | 330.0 | 12.4 | 4.3 | 4.3 | 1.5 | 8.0 | 12.0 | Q2 |

TAPE AND REEL BOX DIMENSIONS

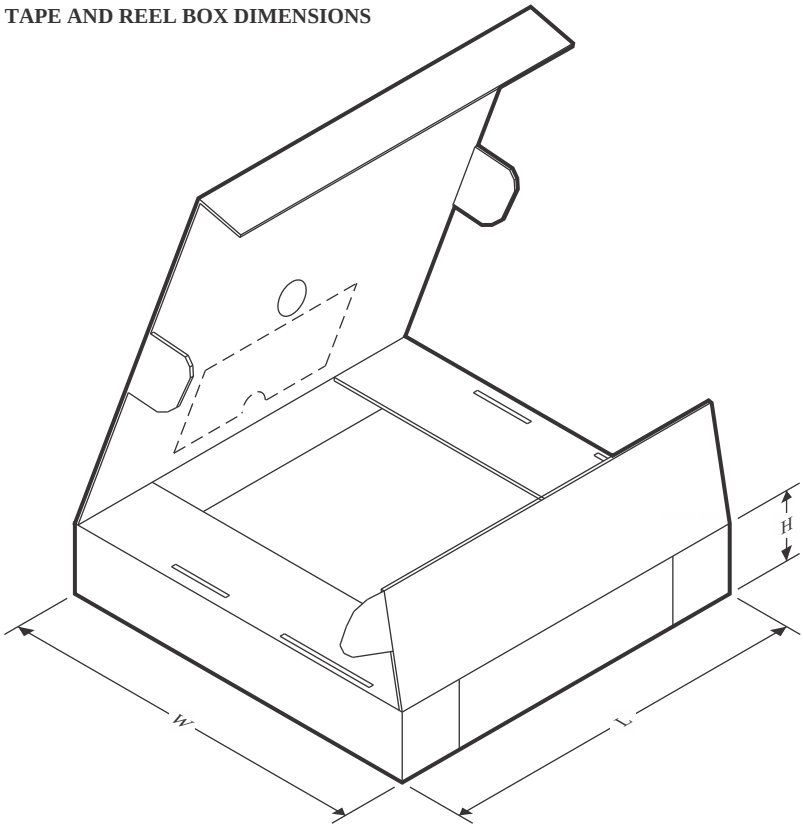


*All dimensions are nominal

| Device | Package Type | Package Drawing | Pins | SPQ | Length (mm) | Width (mm) | Height (mm) |
|---|---|---|---|---|---|---|---|
| CC2500RGPRG4 | QFN | RGP | 20 | 3000 | 350.0 | 350.0 | 43.0 |

## TUBE

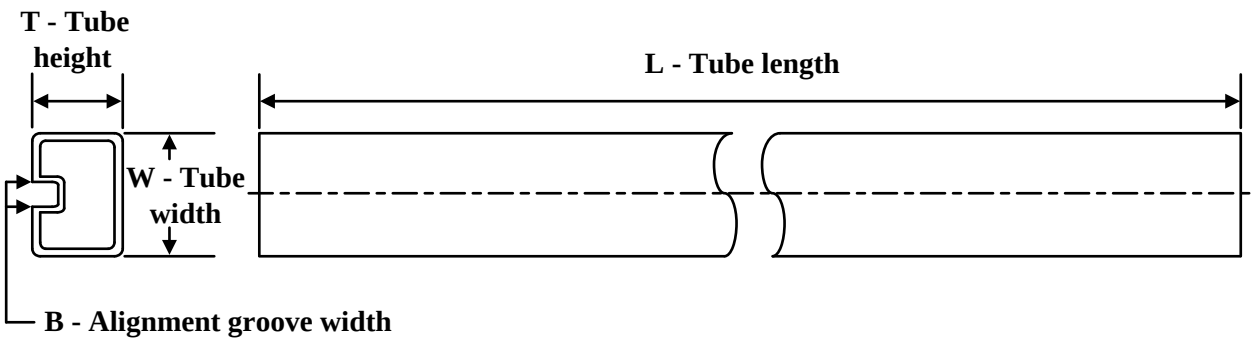


*All dimensions are nominal

| Device | Package Name | Package Type | Pins | SPQ | L (mm) | W (mm) | T (µm) | B (mm) |
|---|---|---|---|---|---|---|---|---|
| CC2500RGP | RGP | VQFN | 20 | 92 | 381 | 5.79 | 2286 | 0 |
| CC2500RGP.B | RGP | VQFN | 20 | 92 | 381 | 5.79 | 2286 | 0 |

# GENERIC PACKAGE VIEW

## RGP 20

## VQFN - 1 mm max height

**4 x 4, 0.5 mm pitch**

VERY THIN QUAD FLATPACK

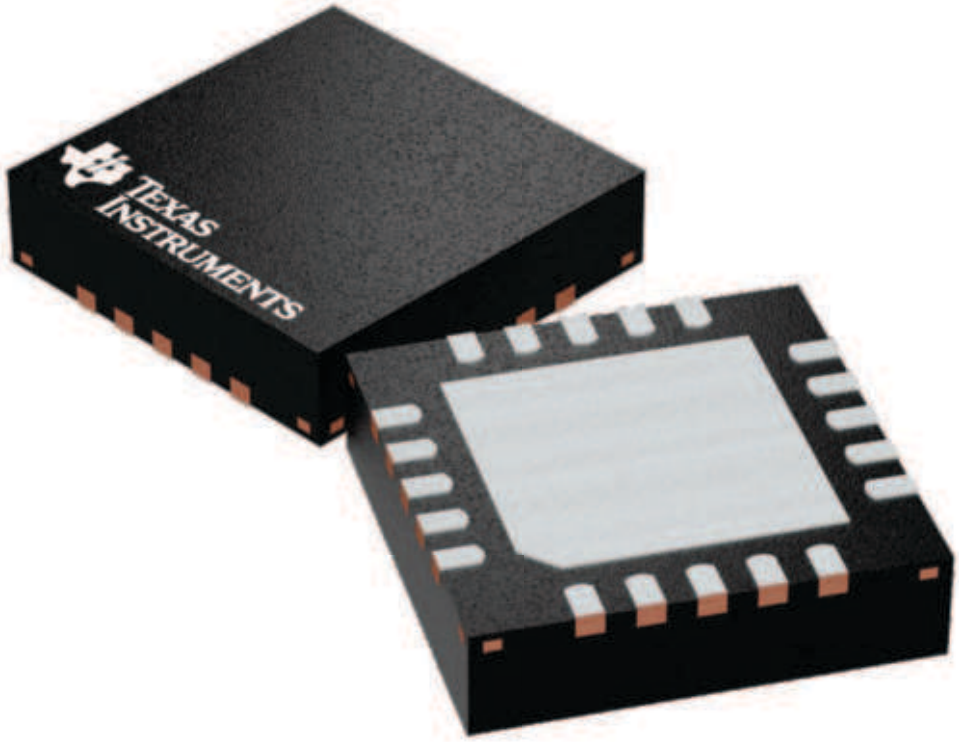


Images above are just a representation of the package family, actual package may vary.
Refer to the product data sheet for package details.

4224735/A

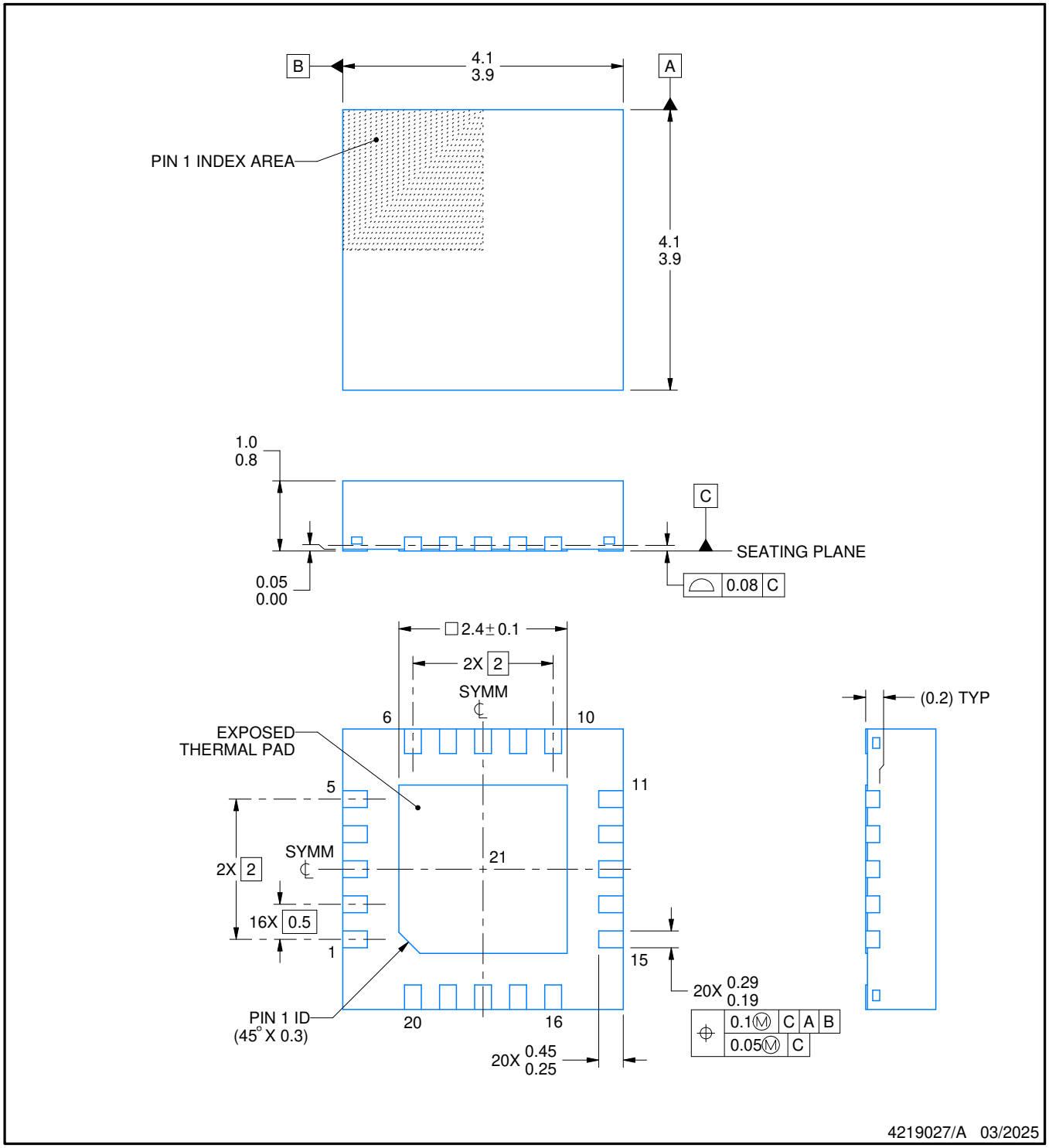


NOTES:

1. All linear dimensions are in millimeters. Any dimensions in parenthesis are for reference only. Dimensioning and tolerancing per ASME Y14.5M.
2. This drawing is subject to change without notice.
3. The package thermal pad must be soldered to the printed circuit board for thermal and mechanical performance.

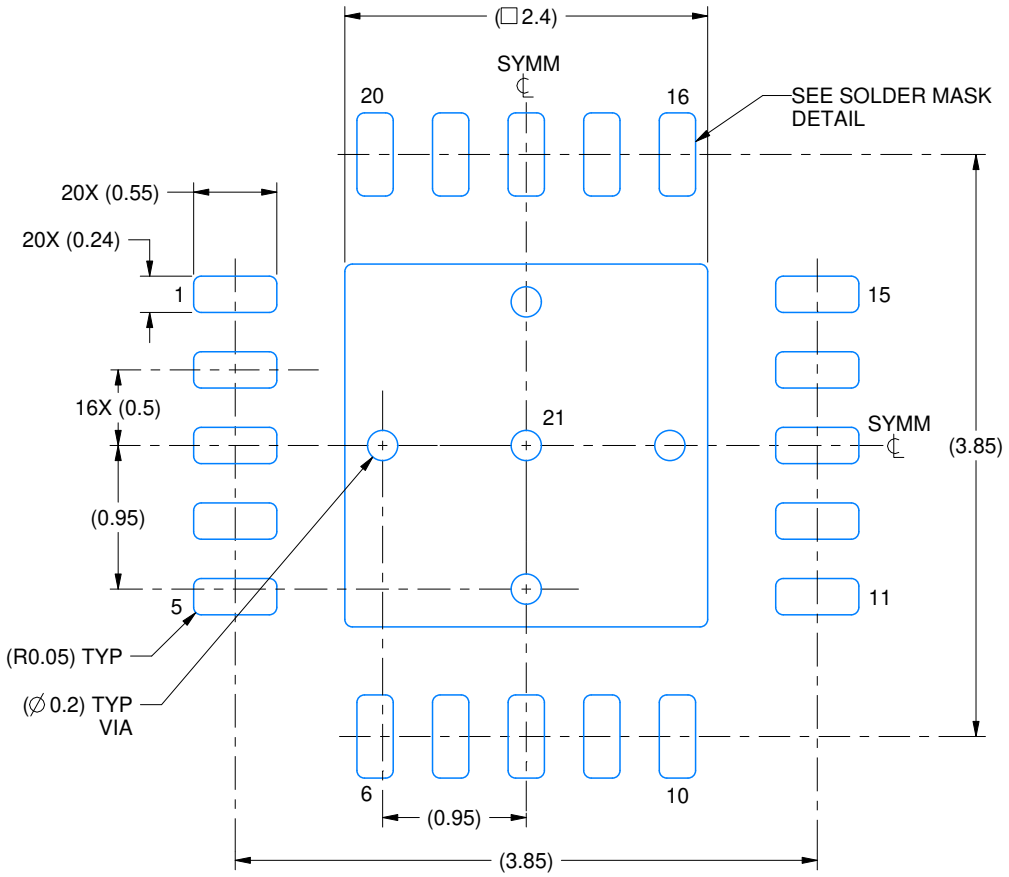


LAND PATTERN EXAMPLE
EXPOSED METAL SHOWN
SCALE: 20X

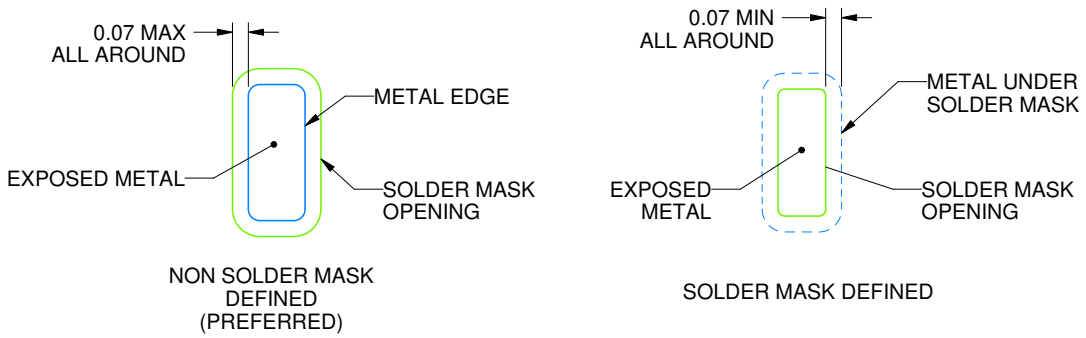


SOLDER MASK DETAILS

4219027/A 03/2025

NOTES: (continued)

4. This package is designed to be soldered to a thermal pad on the board. For more information, see Texas Instruments literature number SLUA271 (www.ti.com/lit/slua271).
5. Vias are optional depending on application, refer to device data sheet. If any vias are implemented, refer to their locations shown on this view. It is recommended that vias under paste be filled, plugged or tented.

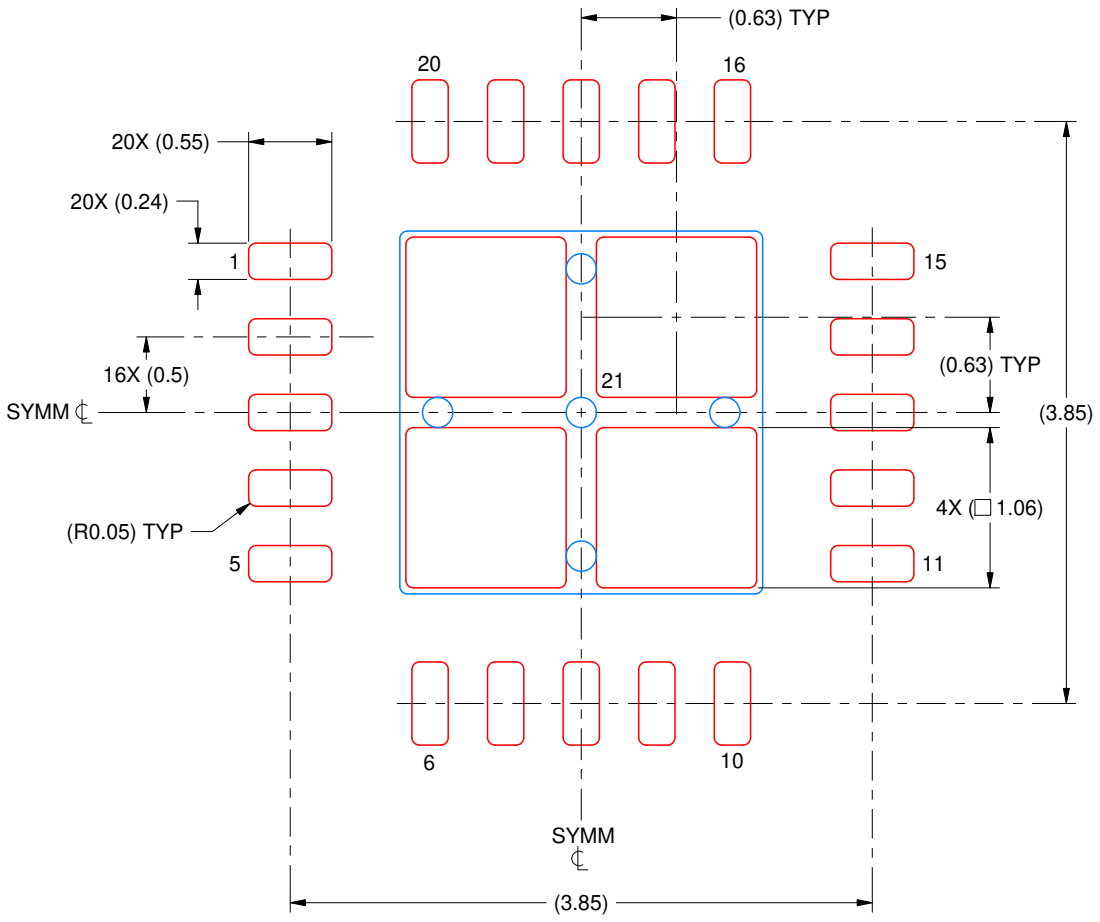


SOLDER PASTE EXAMPLE
BASED ON 0.125 MM THICK STENCIL
SCALE: 20X

EXPOSED PAD 21
78% PRINTED SOLDER COVERAGE BY AREA UNDER PACKAGE

4219027/A 03/2025

NOTES: (continued)

6. Laser cutting apertures with trapezoidal walls and rounded corners may offer better paste release. IPC-7525 may have alternate design recommendations.

# IMPORTANT NOTICE AND DISCLAIMER

TI PROVIDES TECHNICAL AND RELIABILITY DATA (INCLUDING DATASHEETS), DESIGN RESOURCES (INCLUDING REFERENCE DESIGNS), APPLICATION OR OTHER DESIGN ADVICE, WEB TOOLS, SAFETY INFORMATION, AND OTHER RESOURCES “AS IS” AND WITH ALL FAULTS, AND DISCLAIMS ALL WARRANTIES, EXPRESS AND IMPLIED, INCLUDING WITHOUT LIMITATION ANY IMPLIED WARRANTIES OF MERCHANTABILITY, FITNESS FOR A PARTICULAR PURPOSE OR NON-INFRINGEMENT OF THIRD PARTY INTELLECTUAL PROPERTY RIGHTS.

These resources are intended for skilled developers designing with TI products. You are solely responsible for (1) selecting the appropriate TI products for your application, (2) designing, validating and testing your application, and (3) ensuring your application meets applicable standards, and any other safety, security, regulatory or other requirements.

These resources are subject to change without notice. TI grants you permission to use these resources only for development of an application that uses the TI products described in the resource. Other reproduction and display of these resources is prohibited. No license is granted to any other TI intellectual property right or to any third party intellectual property right. TI disclaims responsibility for, and you fully indemnify TI and its representatives against any claims, damages, costs, losses, and liabilities arising out of your use of these resources.

TI’s products are provided subject to TI’s Terms of Sale, TI’s General Quality Guidelines, or other applicable terms available either on ti.com or provided in conjunction with such TI products. TI’s provision of these resources does not expand or otherwise alter TI’s applicable warranties or warranty disclaimers for TI products. Unless TI explicitly designates a product as custom or customer-specified, TI products are standard, catalog, general purpose devices.

TI objects to and rejects any additional or different terms you may propose.

Copyright © 2026, Texas Instruments Incorporated

Last updated 10/2025