CC430F614x, CC430F514x, CC430F512x MSP430™ SoC With RF Core

1 Device Overview

1.1 Features

- True System-on-Chip (SoC) for Low-Power Wireless Communication Applications
- Wide Supply Voltage Range: 3.6 V Down to 1.8 V
- Ultra-Low Power Consumption:
  - CPU Active Mode (AM): 160 µA/MHz
  - Standby Mode (LPM3 RTC Mode): 2.0 µA
  - Off Mode (LPM4 RAM Retention): 1.0 µA
  - Real-Time Clock (RTC) Only Mode (LPM3.5): 1.0 µA
  - Shutdown Mode (LPM4.5): 0.3 µA
  - Radio in RX: 15 mA, 250 kbps, 915 MHz
- MSP430™ System and Peripherals
  - 16-Bit RISC Architecture, Extended Memory, up to 20-MHz System Clock
  - Wake up From Standby Mode in Less Than 6 µs
  - Flexible Power-Management System With SVS and Brownout
  - Unified Clock System With FLL
  - 16-Bit Timer TA0, Timer_A With Five Capture/Compare Registers
  - 16-Bit Timer TA1, Timer_A With Three Capture/Compare Registers
  - Hardware RTC
  - Two Universal Serial Communication Interfaces (USCIs)
    - USCI_A0 Supports UART, IrDA, SPI
    - USCI_B0 Supports I^2C, SPI
  - 10-Bit Analog-to-Digital Converter (ADC) With Internal Reference, Sample-and-Hold, and Autoscan Features (Only CC430F614x and CC430F514x)
  - Comparator
  - Integrated LCD Driver With Contrast Control for up to 96 Segments (Only CC430F614x)
  - 128-Bit AES Security Encryption and Decryption Coprocessor
  - 32-Bit Hardware Multiplier
  - 3-Channel Internal DMA
  - Serial Onboard Programming, No External Programming Voltage Needed
  - Embedded Emulation Module (EEM)
- High-Performance Sub-1 GHz RF Transceiver Core
  - Same as in CC1101
  - Wide Supply Voltage Range: 2 V to 3.6 V
  - Frequency Bands: 300 MHz to 348 MHz, 389 MHz to 464 MHz, and 779 MHz to 928 MHz
  - Programmable Data Rate From 0.6 kBaud to 500 kBaud
  - High Sensitivity (–117 dBm at 0.6 kBaud, –111 dBm at 1.2 kBaud, 315 MHz, 1% Packet Error Rate)
  - Excellent Receiver Selectivity and Blocking Performance
  - Programmable Output Power up to +12 dBm for All Supported Frequencies
  - 2-FSK, 2-GFSK, and MSK Supported, Also OOK and Flexible ASK Shaping
  - Flexible Support for Packet-Oriented Systems: On-Chip Support for Sync Word Detection, Address Check, Flexible Packet Length, and Automatic CRC Handling
  - Support for Automatic Clear Channel Assessment (CCA) Before Transmitting (for Listen-Before-Talk Systems)
  - Digital RSSI Output
  - Suited for Systems Targeting Compliance With EN 300 220 (Europe) and FCC CFR Part 15 (US)
  - Suited for Systems Targeting Compliance With Wireless M-Bus Standard EN 13757-4:2005
  - Support for Asynchronous and Synchronous Serial Receive/Transmit Mode for Backward Compatibility With Existing Radio Communication Protocols
- Device Comparison Summarizes the Available Family Members

1.2 Applications

- Wireless Analog and Digital Sensor Systems
- Heat Cost Allocators
- Thermostats
- AMR and AMI Meters
- Smart Grid Wireless Networks

An IMPORTANT NOTICE at the end of this data sheet addresses availability, warranty, changes, use in safety-critical applications, intellectual property matters and other important disclaimers. PRODUCTION DATA.

1.3 Description

The TI CC430 family of ultra-low-power system-on-chip microcontrollers with integrated RF transceiver cores consists of several devices featuring different sets of peripherals targeted for a wide range of applications. The architecture, combined with seven low-power modes (including LPM3.5 and LMP4.5), is optimized to achieve extended battery life in portable measurement applications. The device features the powerful MSP430 16-bit RISC CPU, 16-bit registers, and constant generators that contribute to maximum code efficiency.

The CC430 family provides a tight integration between the microcontroller core, its peripherals, software, and the RF transceiver, making these true system-on-chip solutions easy to use as well as improving performance.

The CC430F614x series are microcontroller system-on-chip configurations combining the excellent performance of the state-of-the-art CC1101 sub-1 GHz RF transceiver with the MSP430 CPUXV2, up to 32KB of in-system programmable flash memory, up to 4KB of RAM, two 16-bit timers, a high-performance 10-bit ADC with eight external inputs plus internal temperature and battery sensors, a comparator, USCIs, a 128-bit AES security accelerator, a hardware multiplier, DMA, an RTC module with alarm capabilities, an LCD driver, and up to 44 I/O pins.

The CC430F514x and CC430F512x series are microcontroller system-on-chip configurations combining the excellent performance of the state-of-the-art CC1101 sub-1 GHz RF transceiver with the MSP430 CPUXV2, up to 32KB of in-system programmable flash memory, up to 4KB of RAM, two 16-bit timers, a high-performance 10-bit ADC with six external inputs plus internal temperature and battery sensors on CC430F514x devices, a comparator, a USCI, a 128-bit AES security accelerator, a hardware multiplier, DMA, an RTC module with alarm capabilities, and up to 30 I/O pins.

For complete module descriptions, see the *CC430 Family User's Guide*.

Device Information(1)

PART NUMBER	PACKAGE	BODY SIZE(2)
CC430F6147IRGC	VQFN (64)	9 mm × 9 mm
CC430F5147IRGZ	VQFN (48)	7 mm × 7 mm

(1) For the most current part, package, and ordering information, see the *Package Option Addendum* in Section 9, or see the TI website at www.ti.com.
(2) The sizes shown here are approximations. For the package dimensions with tolerances, see the *Mechanical Data* in Section 9.

Copyright © 2012–2018, Texas Instruments Incorporated

1.4 Functional Block Diagrams

Figure 1-1 shows the functional block diagram for the CC430F614x devices.

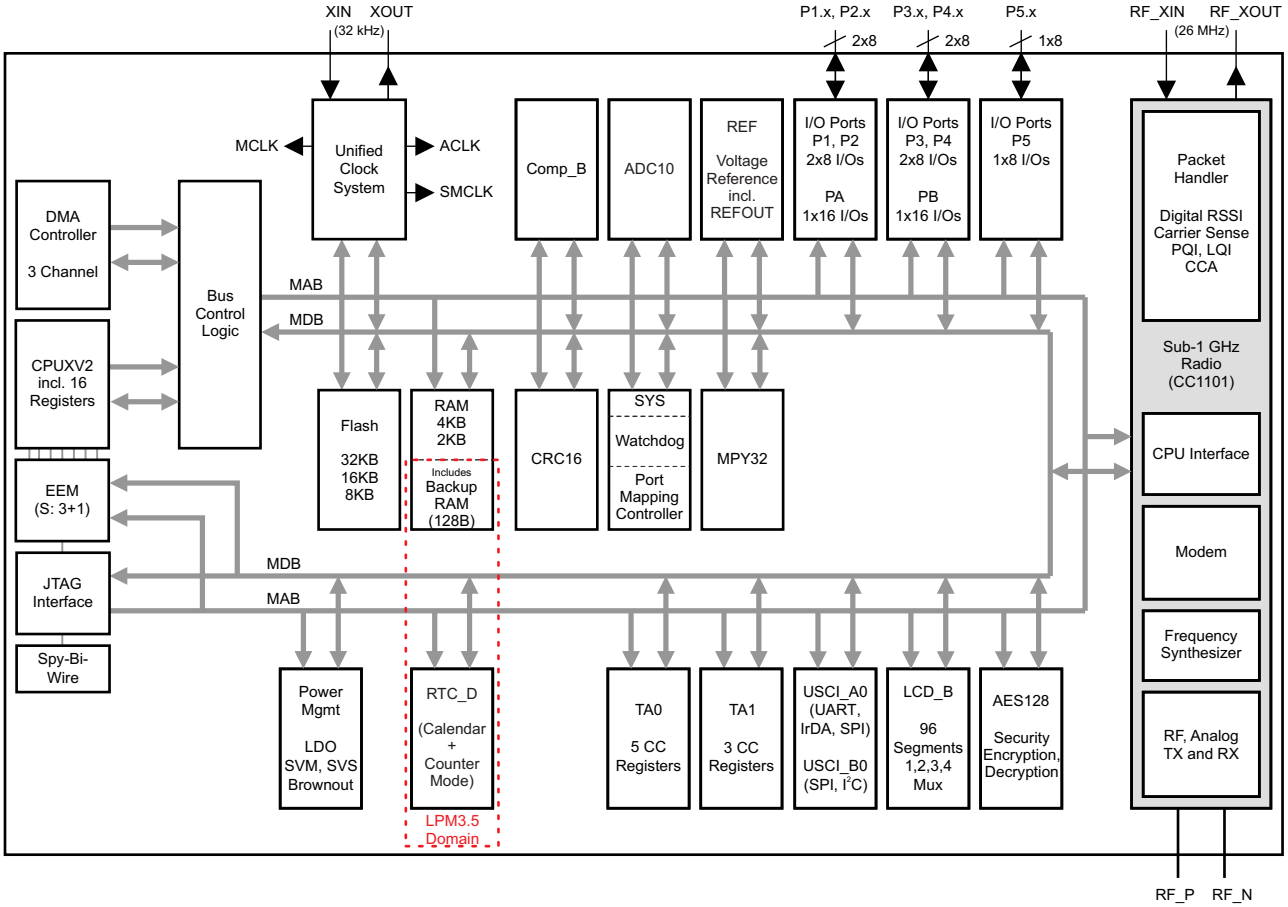

Copyright © 2017, Texas Instruments Incorporated

NOTE: Edge-selectable interrupt and LPM3.5 and LPM4.5 wake-up input capability is available for ports P1 and P2.

Figure 1-1. CC430F614x Functional Block Diagram

Figure 1-2 shows the functional block diagram for the CC430F514x devices.

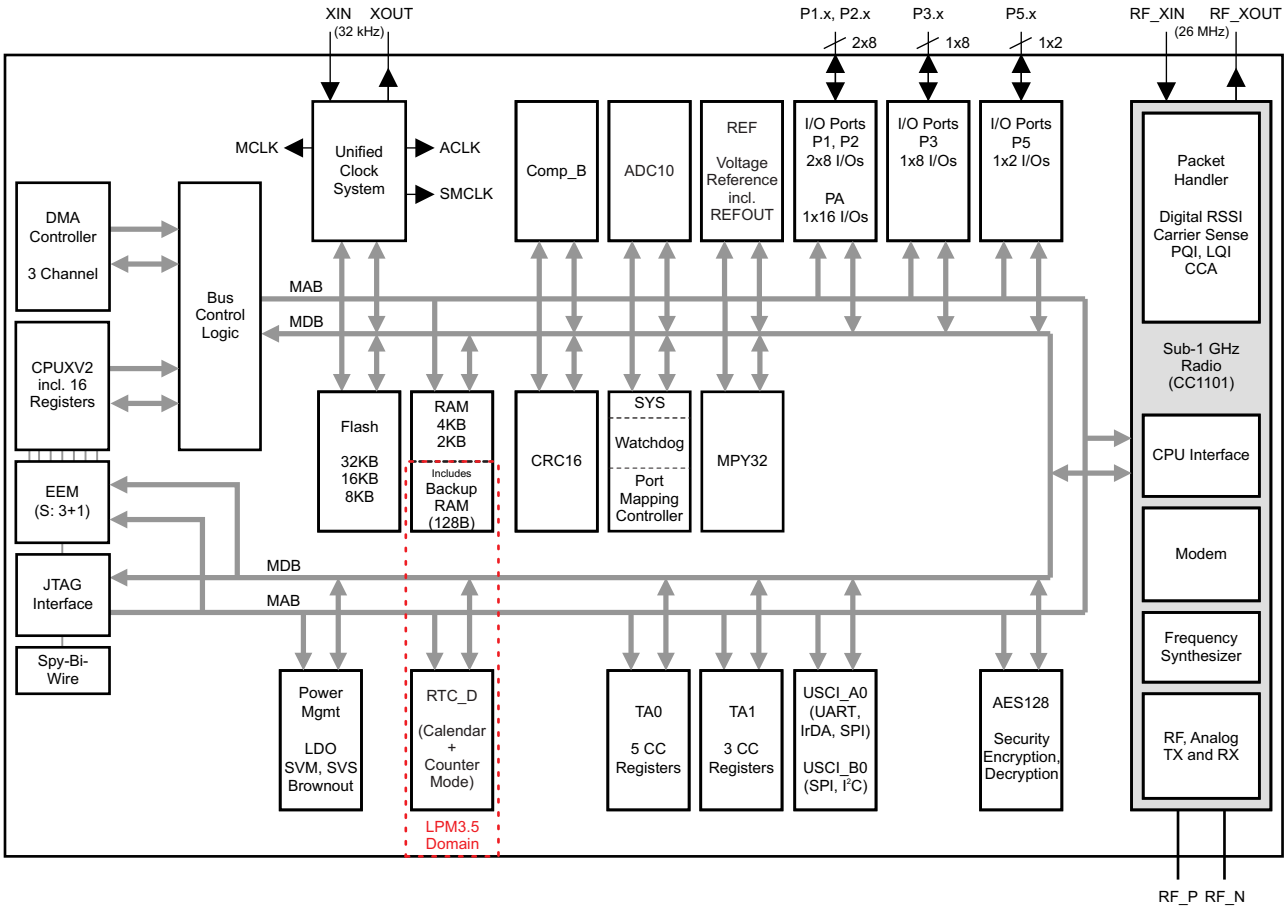

Copyright © 2017, Texas Instruments Incorporated

NOTE: Edge-selectable interrupt and LPM3.5 and LPM4.5 wake-up input capability is available for ports P1 and P2.

Figure 1-2. CC430F514x Functional Block Diagram

Figure 1-3 shows the functional block diagram for the CC430F512x devices.

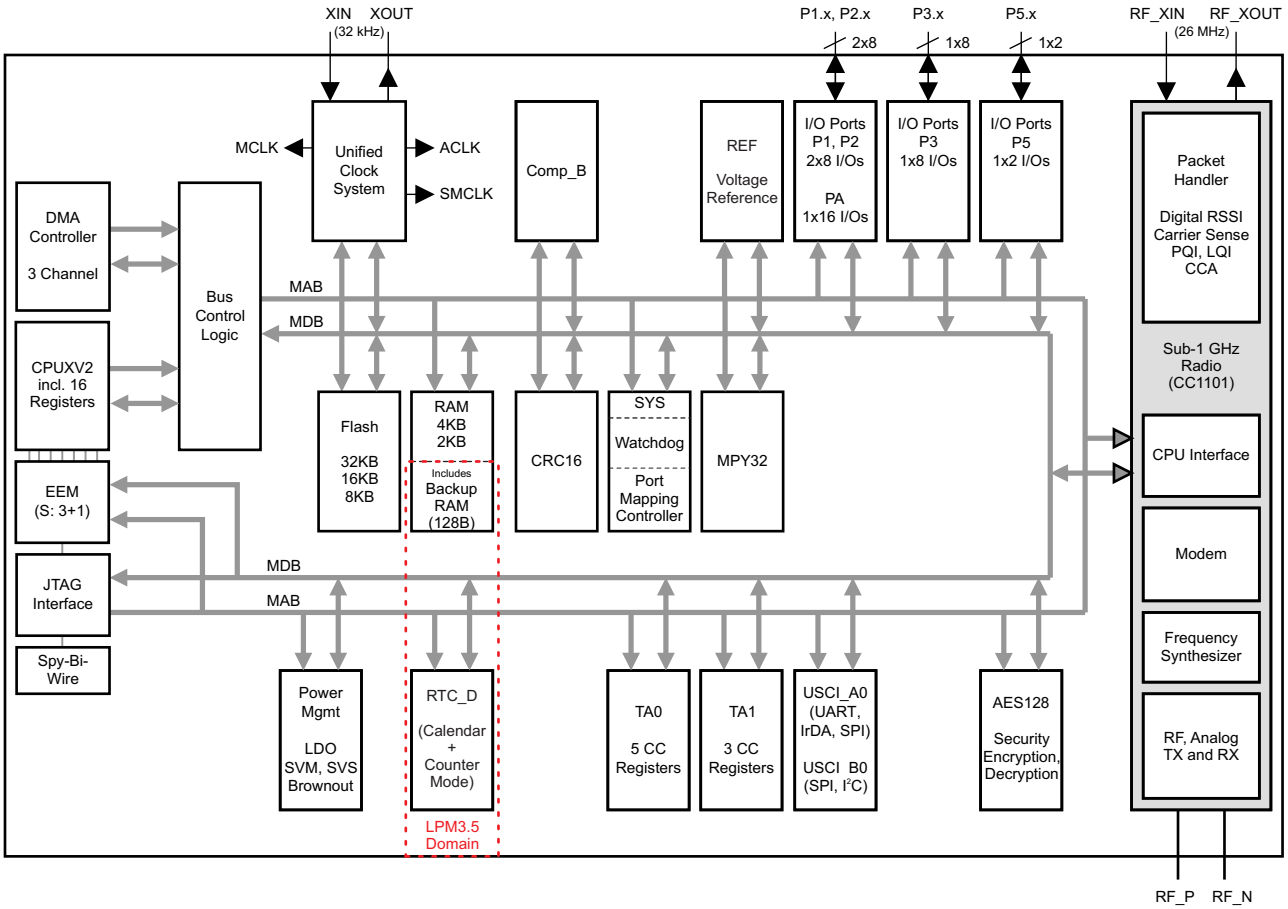

Copyright © 2017, Texas Instruments Incorporated

NOTE: Edge-selectable interrupt and LPM3.5 and LPM4.5 wake-up input capability is available for ports P1 and P2.

Figure 1-3. CC430F512x Functional Block Diagram

Table of Contents

1 Device Overview **1**
1.1 Features 1
1.2 Applications 1
1.3 Description 2
1.4 Functional Block Diagrams 3
2 Revision History **8**
3 Device Comparison **9**
3.1 Related Products 9
4 Terminal Configuration and Functions **10**
4.1 Pin Diagrams 10
4.2 Signal Descriptions 13
5 Specifications **18**
5.1 Absolute Maximum Ratings 18
5.2 ESD Ratings 18
5.3 Recommended Operating Conditions 18
5.4 Active Mode Supply Current Into V_{CC} Excluding External Current 20
5.5 Typical Characteristics – Active Mode Supply Currents 20
5.6 Low-Power Mode Supply Currents (Into V_{CC}) Excluding External Current 21
5.7 Typical Characteristics – Low-Power Mode Supply Currents 22
5.8 Low-Power Mode With LCD Supply Currents (Into V_{CC}) Excluding External Current 23
5.9 Thermal Resistance Characteristics, CC430F51xx 23
5.10 Thermal Resistance Characteristics, CC430F61xx 23
5.11 Digital Inputs 24
5.12 Digital Outputs 25
5.13 Typical Characteristics – Outputs, Reduced Drive Strength (PxDS.y = 0) 26
5.14 Typical Characteristics – Outputs, Full Drive Strength (PxDS.y = 1) 27
5.15 Crystal Oscillator, XT1, Low-Frequency Mode 28
5.16 Internal Very-Low-Power Low-Frequency Oscillator (VLO) 29
5.17 Internal Reference, Low-Frequency Oscillator (REFO) 29
5.18 DCO Frequency 30
5.19 PMM, Brownout Reset (BOR) 31
5.20 PMM, Core Voltage 31
5.21 PMM, SVS High Side 32
5.22 PMM, SVM High Side 32
5.23 PMM, SVS Low Side 33
5.24 PMM, SVM Low Side 33
5.25 Wake-up Times From Low-Power Modes and Reset 33
5.26 Timer_A 33
5.27 USCI (UART Mode) Clock Frequency 34
5.28 USCI (UART Mode) 34
5.29 USCI (SPI Master Mode) Clock Frequency 34
5.30 USCI (SPI Master Mode) 34
5.31 USCI (SPI Slave Mode) 36
5.32 USCI (I^2C Mode) 38
5.33 LCD_B Operating Conditions 39
5.34 LCD_B Electrical Characteristics 40
5.35 10-Bit ADC, Power Supply and Input Range Conditions 41
5.36 10-Bit ADC, Timing Parameters 41
5.37 10-Bit ADC, Linearity Parameters 42
5.38 REF, External Reference 42
5.39 REF, Built-In Reference 43
5.40 Comparator_B 45
5.41 Flash Memory 46
5.42 JTAG and Spy-Bi-Wire Interface 46
5.43 RF1A CC1101-Based Radio Parameters 47
5.44 RF1A Recommended Operating Conditions 47
5.45 RF Crystal Oscillator, XT2 47
5.46 Current Consumption, Reduced-Power Modes 47
5.47 Current Consumption, Receive Mode 48
5.48 Current Consumption, Transmit Mode 50
5.49 Typical TX Current Consumption, 315 MHz, 25°C 51
5.50 Typical TX Current Consumption, 433 MHz, 25°C 51
5.51 Typical TX Current Consumption, 868 MHz 51
5.52 Typical TX Current Consumption, 915 MHz 51
5.53 RF Receive, Overall 52
5.54 RF Receive, 315 MHz 52
5.55 RF Receive, 433 MHz 52
5.56 RF Receive, 868 MHz and 915 MHz 53
5.57 Typical Sensitivity, 315 MHz, Sensitivity Optimized Setting 56
5.58 Typical Sensitivity, 433 MHz, Sensitivity Optimized Setting 56
5.59 Typical Sensitivity, 868 MHz, Sensitivity Optimized Setting 56
5.60 Typical Sensitivity, 915 MHz, Sensitivity Optimized Setting 56
5.61 RF Transmit 57
5.62 Optimum PATABLE Settings for Various Output Power Levels and Frequency Bands 58
5.63 Typical Output Power, 315 MHz 59
5.64 Typical Output Power, 433 MHz 59
5.65 Typical Output Power, 868 MHz 59
5.66 Typical Output Power, 915 MHz 59
5.67 Frequency Synthesizer Characteristics 60
5.68 Typical RSSI_offset Values 61
6 Detailed Description **62**
6.1 Sub-1 GHz Radio 62
6.2 CPU 63
6.3 Operating Modes 63
6.4 Interrupt Vector Addresses 64
6.5 Memory Organization 65
6.6 Bootloader (BSL) 66
6.7 JTAG Operation 66
6.8 Flash Memory 67
6.9 RAM 67
6.10 Backup RAM 67

Copyright © 2012–2018, Texas Instruments Incorporated

6.11 Peripherals 67
6.12 Input/Output Diagrams 87
6.13 Device Descriptor Structure 106
7 Applications, Implementation, and Layout 108
7.1 Application Circuits 108
8 Device and Documentation Support 112
8.1 Getting Started and Next Steps 112
8.2 Device Nomenclature 112
8.3 Tools and Software 114
8.4 Documentation Support 115
8.5 Related Links 117
8.6 Community Resources 117
8.7 Trademarks 117
8.8 Electrostatic Discharge Caution 117
8.9 Export Control Notice 117
8.10 Glossary 117
9 Mechanical, Packaging, and Orderable Information 118

2 Revision History

NOTE: Page numbers for previous revisions may differ from page numbers in the current version.

Changes from February 27, 2013 to September 17, 2018	Page
• Format and structure changes throughout document including addition of section numbering	1
• Added Section 1.2, *Applications*	1
• Added *Device Information* table	2
• Added Section 3.1, *Related Products*	9
• Added typical conditions statements at the beginning of , *Specifications*	18
• Added Section 5.2, *ESD Ratings*	18
• Moved *Thermal Resistance Characteristics* tables	23
• Changed the MIN value of the $V_{(DVCC_BOR_hys)}$ parameter from 60 mV to 50 mV in Section 5.19, *PMM, Brownout Reset (BOR)*	31
• Updated notes (1) and (2) and added note (3) in Section 5.25,*Wake-up Times From Low-Power Modes and Reset*	33
• Removed ADC10DIV from the formula for the TYP value in the second row of the $t_{CONVERT}$ parameter in Section 5.36, *10-Bit ADC, Timing Parameters*, because ADC10CLK is after division	41
• For the I_{AVCC_REF} parameter, switched rows for TYP and MAX values (higher values are with Test Condition of CBREFACC = 0) in Section 5.40, *Comparator_B*	45
• Changed the MAX value of the t_{EN_CMP} parameter with Test Conditions of "CBPWRMD = 10" from 1.5 µs to 100 µs in Section 5.40, *Comparator_B*	45
• In Section 5.46, changed Test Conditions "RF crystal oscillator only" and added note	47
• Changed all instances of "bootstrap loader" to "bootloader" throughout document	66
• Corrected spelling of NMIIFG in Table 6-8, *System Module Interrupt Vector Registers*	71
• Added Section 8, *Device and Documentation Support*, and moved *Device Nomenclature*, *ESD Caution*, and *Trademarks* sections to it	112
• Added Section 9, *Mechanical, Packaging, and Orderable Information*	118

Copyright © 2012–2018, Texas Instruments Incorporated

3 Device Comparison

Table 3-1 summarizes the available family members.

Table 3-1. Family Members

DEVICE	PROGRAM (KB)	SRAM (KB)	Timer_A[1]	LCD_B	USCI		ADC10_A CHANNELS	COMP_B CHANNELS	I/O	PACKAGE
					CHANNEL A: UART, LIN, IrDA, SPI	CHANNEL B: SPI, I²C				
CC430F6147	32	4	5, 3	96 seg	1	1	8 ext, 4 int	8	44	64 RGC
CC430F6145	16	2	5, 3	96 seg	1	1	8 ext, 4 int	8	44	64 RGC
CC430F6143	8	2	5, 3	96 seg	1	1	8 ext, 4 int	8	44	64 RGC
CC430F5147	32	4	5, 3	N/A[2]	1	1	6 ext, 4 int	6	30	48 RGZ
CC430F5145	16	2	5, 3	N/A	1	1	6 ext, 4 int	6	30	48 RGZ
CC430F5143	8	2	5, 3	N/A	1	1	6 ext, 4 int	6	30	48 RGZ
CC430F5125	16	2	5, 3	N/A	1	1	N/A[2]	6	30	48 RGZ
CC430F5123	8	2	5, 3	N/A	1	1	N/A	6	30	48 RGZ

(1) Each number in the sequence represents an instantiation of Timer_A with its associated number of capture/compare registers and PWM output generators available. For example, a number sequence of 5, 3 represents two instantiations of Timer_A, the first instantiation having 5 capture/compare registers and PWM output generators, and the second instantiation having 3 capture/compare registers and PWM output generators, respectively.
(2) N/A = not available

3.1 Related Products

For information about other devices in this family of products or related products, see the following links.

Products for TI Microcontrollers TI's low-power and high-performance MCUs, with wired and wireless connectivity options, are optimized for a broad range of applications.

Products for MSP430 Ultra-Low-Power Microcontrollers One platform. One ecosystem. Endless possibilities. Enabling the connected world with innovations in ultra-low-power microcontrollers with advanced peripherals for precise sensing and measurement.

Companion Products for CC430F6147 Review products that are frequently purchased or used in conjunction with this product.

Reference Designs for CC430F6147 TI Designs Reference Design Library is a robust reference design library that spans analog, embedded processor, and connectivity. Created by TI experts to help you jump start your system design, all TI Designs include schematic or block diagrams, BOMs, and design files to speed your time to market. Search and download designs at ti.com/tidesigns.

4 Terminal Configuration and Functions

4.1 Pin Diagrams

Figure 4-1 shows the pinout for the CC430F614x devices in the RGC package.

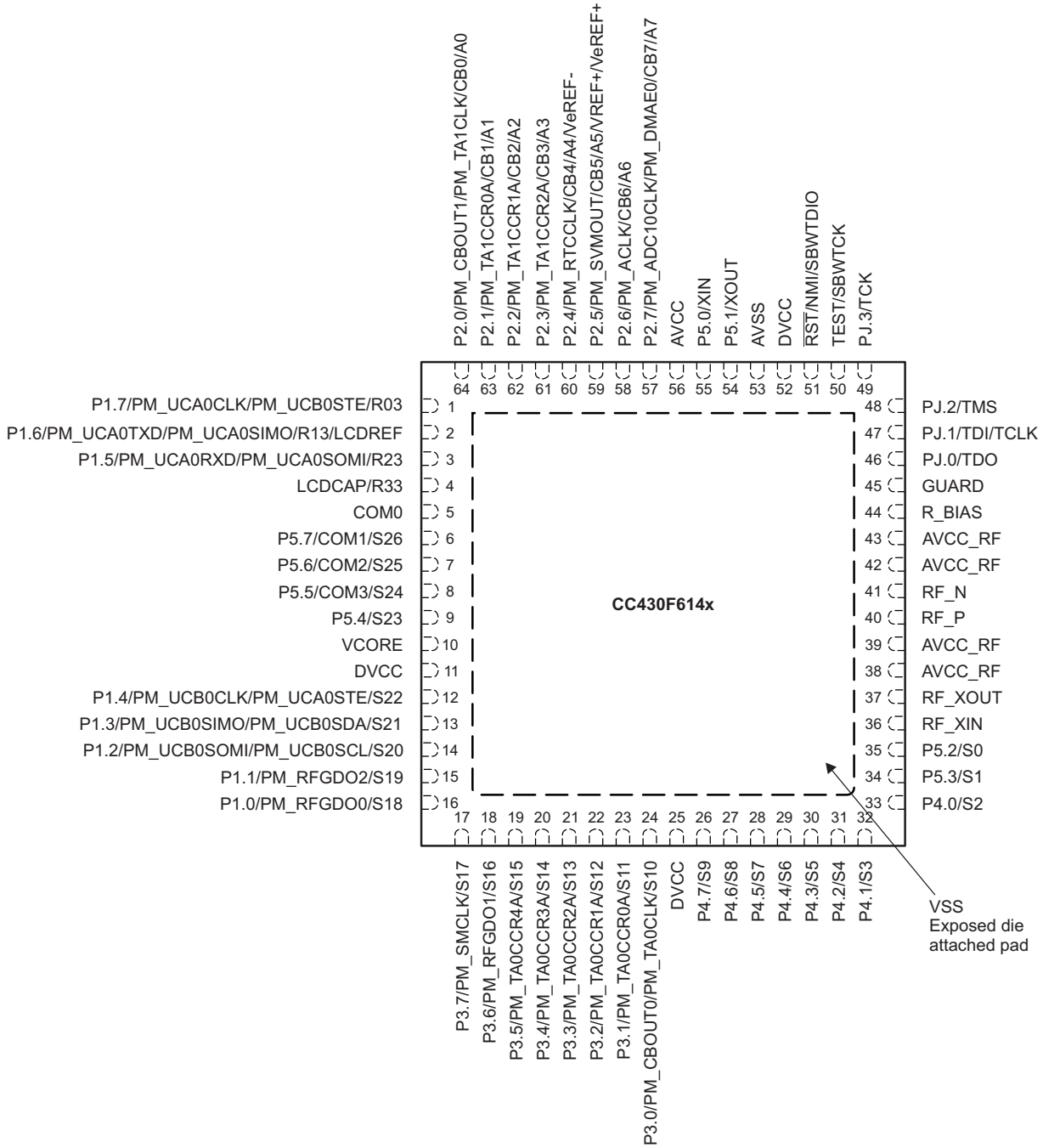

CAUTION: LCDCAP/R33 must be connected to VSS if not used.

NOTE: The secondary digital functions on ports P1, P2, and P3 are fully mappable. Pinout shows only the default mapping. See Table 6-6 for details.

Figure 4-1. 64-Pin RGC Package (Top View), CC430F614x

Copyright © 2012–2018, Texas Instruments Incorporated

Figure 4-2 shows the pinout for the CC430F514x devices in the RGZ package.

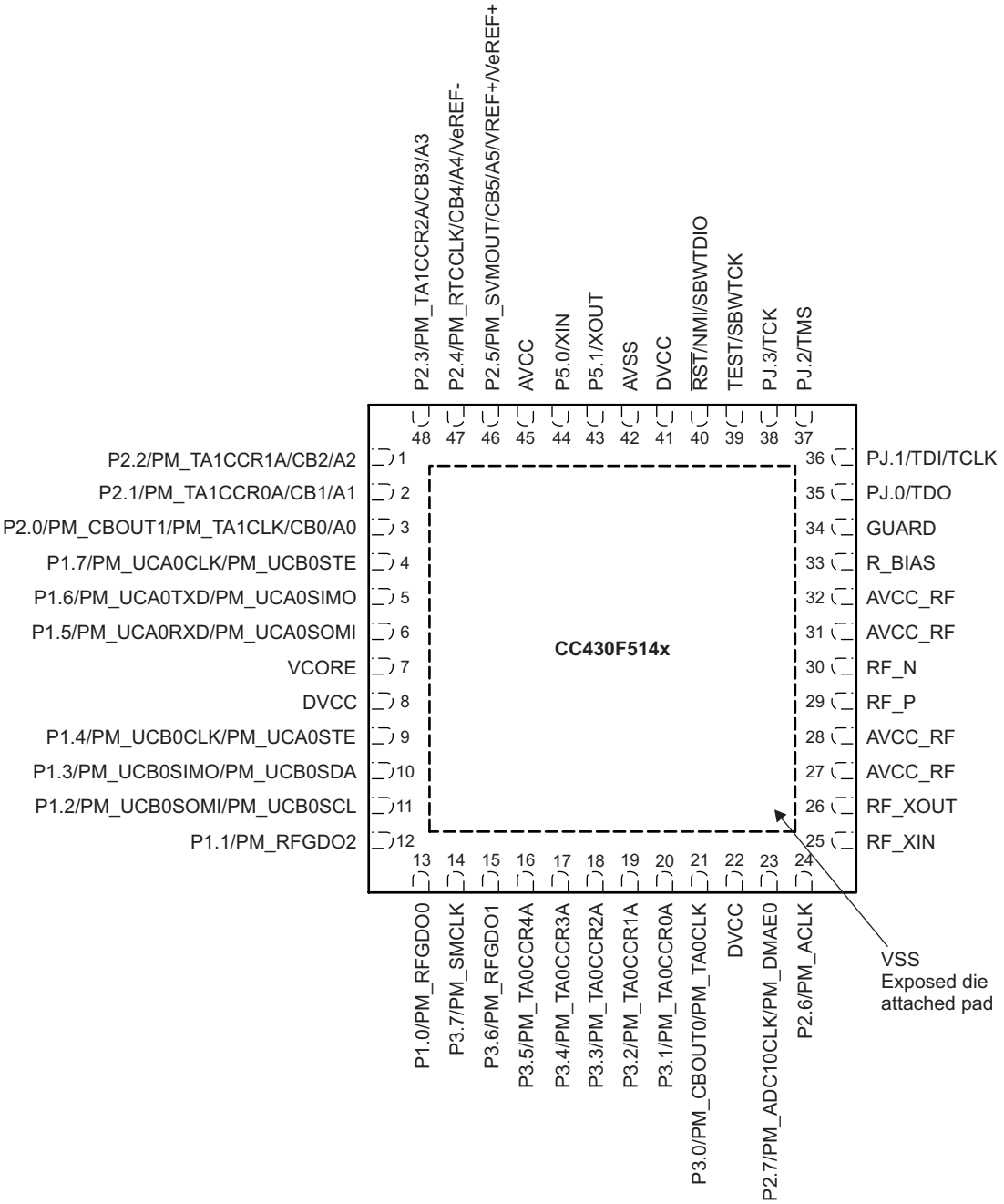

NOTE: The secondary digital functions on ports P1, P2, and P3 are fully mappable. Pinout shows only the default mapping. See Table 6-6 for details.

Figure 4-2. 48-Pin RGZ Package (Top View), CC430F514x

Figure 4-3 shows the pinout for the CC430F512x devices in the RGZ package.

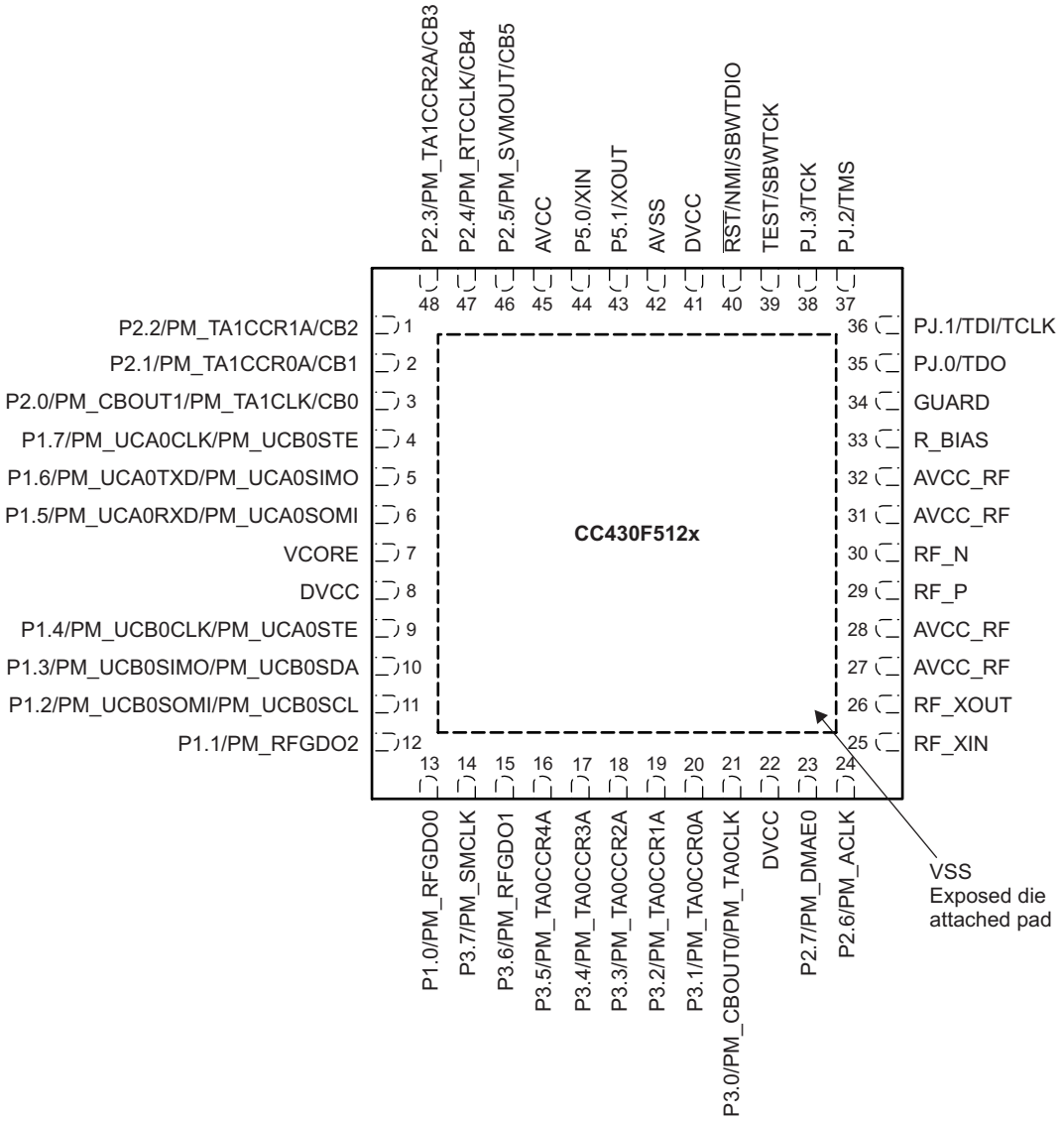

NOTE: The secondary digital functions on ports P1, P2, and P3 are fully mappable. Pinout shows only the default mapping. See Table 6-6 for details.

Figure 4-3. 48-Pin RGZ Package (Top View), CC430F512x

Copyright © 2012–2018, Texas Instruments Incorporated

4.2 Signal Descriptions

Table 4-1 describes the signals for the CC430F614x devices.

Table 4-1. CC430F614x Terminal Functions

TERMINAL		I/O(1)	DESCRIPTION
NAME	NO.		
P1.7/ PM_UCA0CLK/ PM_UCB0STE/ R03	1	I/O	General-purpose digital I/O with port interrupt and mappable secondary function Default mapping: USCI_A0 clock input/output; USCI_B0 SPI slave transmit enable Input/output port of lowest analog LCD voltage (V5)
P1.6/ PM_UCA0TXD/ PM_UCA0SIMO/ R13/ LCDREF	2	I/O	General-purpose digital I/O with port interrupt and mappable secondary function Default mapping: USCI_A0 UART transmit data; USCI_A0 SPI slave in master out Input/output port of third most positive analog LCD voltage (V3 or V4) External reference voltage input for regulated LCD voltage
P1.5/ PM_UCA0RXD/ PM_UCA0SOMI/ R23	3	I/O	General-purpose digital I/O with port interrupt and mappable secondary function Default mapping: USCI_A0 UART receive data; USCI_A0 SPI slave out master in Input/output port of second most positive analog LCD voltage (V2)
LCDCAP/ R33	4	I/O	LCD capacitor connection Input/output port of most positive analog LCD voltage (V1) **CAUTION:** Must be connected to VSS if not used.
COM0	5	O	LCD common output COM0 for LCD backplane
P5.7/ COM1/ S26	6	I/O	General-purpose digital I/O LCD common output COM1 for LCD backplane LCD segment output S26
P5.6/ COM2/ S25	7	I/O	General-purpose digital I/O LCD common output COM2 for LCD backplane LCD segment output S25
P5.5/ COM3/ S24	8	I/O	General-purpose digital I/O LCD common output COM3 for LCD backplane LCD segment output S24
P5.4/ S23	9	I/O	General-purpose digital I/O LCD segment output S23
VCORE	10		Regulated core power supply
DVCC	11		Digital power supply
P1.4/ PM_UCB0CLK/ PM_UCA0STE/ S22	12	I/O	General-purpose digital I/O with port interrupt and mappable secondary function Default mapping: USCI_B0 clock input/output; USCI_A0 SPI slave transmit enable LCD segment output S22
P1.3/ PM_UCB0SIMO/ PM_UCB0SDA/ S21	13	I/O	General-purpose digital I/O with port interrupt and mappable secondary function Default mapping: USCI_B0 SPI slave in master out; USCI_B0 I^2C data LCD segment output S21
P1.2/ PM_UCB0SOMI/ PM_UCB0SCL/ S20	14	I/O	General-purpose digital I/O with port interrupt and mappable secondary function Default mapping: USCI_B0 SPI slave out master in; UCSI_B0 I^2C clock LCD segment output S20
P1.1/ PM_RFGDO2/ S19	15	I/O	General-purpose digital I/O with port interrupt and mappable secondary function Default mapping: Radio GDO2 output LCD segment output S19
P1.0/ PM_RFGDO0/ S18	16	I/O	General-purpose digital I/O with port interrupt and mappable secondary function Default mapping: Radio GDO0 output LCD segment output S18
P3.7/ PM_SMCLK/ S17	17	I/O	General-purpose digital I/O with mappable secondary function Default mapping: SMCLK output LCD segment output S17
P3.6/ PM_RFGDO1/ S16	18	I/O	General-purpose digital I/O with mappable secondary function Default mapping: Radio GDO1 output LCD segment output S16
P3.5/ PM_TA0CCR4A/ S15	19	I/O	General-purpose digital I/O with mappable secondary function Default mapping: TA0 CCR4 compare output or capture input LCD segment output S15

(1) I = input, O = output

Table 4-1. CC430F614x Terminal Functions (continued)

TERMINAL		I/O(1)	DESCRIPTION
NAME	NO.		
P3.4/ PM_TA0CCR3A/ S14	20	I/O	General-purpose digital I/O with mappable secondary function Default mapping: TA0 CCR3 compare output or capture input LCD segment output S14
P3.3/ PM_TA0CCR2A/ S13	21	I/O	General-purpose digital I/O with mappable secondary function Default mapping: TA0 CCR2 compare output or capture input LCD segment output S13
P3.2/ PM_TA0CCR1A/ S12	22	I/O	General-purpose digital I/O with mappable secondary function Default mapping: TA0 CCR1 compare output or capture input LCD segment output S12
P3.1/ PM_TA0CCR0A/ S11	23	I/O	General-purpose digital I/O with mappable secondary function Default mapping: TA0 CCR0 compare output or capture input LCD segment output S11
P3.0/ PM_CBOUT0/ PM_TA0CLK/ S10	24	I/O	General-purpose digital I/O with mappable secondary function Default mapping: Comparator_B output; TA0 clock input LCD segment output S10
DVCC	25		Digital power supply
P4.7/ S9	26	I/O	General-purpose digital I/O LCD segment output S9
P4.6/ S8	27	I/O	General-purpose digital I/O LCD segment output S8
P4.5/ S7	28	I/O	General-purpose digital I/O LCD segment output S7
P4.4/ S6	29	I/O	General-purpose digital I/O LCD segment output S6
P4.3/ S5	30	I/O	General-purpose digital I/O LCD segment output S5
P4.2/ S4	31	I/O	General-purpose digital I/O LCD segment output S4
P4.1/ S3	32	I/O	General-purpose digital I/O LCD segment output S3
P4.0/ S2	33	I/O	General-purpose digital I/O LCD segment output S2
P5.3/ S1	34	I/O	General-purpose digital I/O LCD segment output S1
P5.2/ S0	35	I/O	General-purpose digital I/O LCD segment output S0
RF_XIN	36	I	Input terminal for RF crystal oscillator or external clock input
RF_XOUT	37	O	Output terminal for RF crystal oscillator
AVCC_RF	38		Radio analog power supply
AVCC_RF	39		Radio analog power supply
RF_P	40	RF I/O	Positive RF input to LNA in receive mode Positive RF output from PA in transmit mode
RF_N	41	RF I/O	Negative RF input to LNA in receive mode Negative RF output from PA in transmit mode
AVCC_RF	42		Radio analog power supply
AVCC_RF	43		Radio analog power supply
RBIAS	44		External bias resistor for radio reference current
GUARD	45		Power supply connection for digital noise isolation
PJ.0/ TDO	46	I/O	General-purpose digital I/O Test data output port
PJ.1/ TDI/ TCLK	47	I/O	General-purpose digital I/O Test data input or test clock input
PJ.2/ TMS	48	I/O	General-purpose digital I/O Test mode select

Copyright © 2012–2018, Texas Instruments Incorporated

Table 4-1. CC430F614x Terminal Functions (continued)

TERMINAL		I/O(1)	DESCRIPTION
NAME	NO.		
PJ.3/ TCK	49	I/O	General-purpose digital I/O Test clock
TEST/ SBWTCK	50	I	Test mode pin - select digital I/O on JTAG pins Spy-Bi-Wire input clock
$\overline{\text{RST}}$/NMI/ SBWTDIO	51	I/O	Reset input active low Nonmaskable interrupt input Spy-Bi-Wire data input/output
DVCC	52		Digital power supply
AVSS	53		Analog ground supply for ADC10
P5.1/ XOUT	54	I/O	General-purpose digital I/O Output terminal of crystal oscillator XT1
P5.0/ XIN	55	I/O	General-purpose digital I/O Input terminal for crystal oscillator XT1
AVCC	56		Analog power supply
P2.7/ PM_ADC10CLK/ PM_DMAE0/ CB7 (/A7)	57	I/O	General-purpose digital I/O with port interrupt and mappable secondary function Default mapping: ADC10CLK output; DMA external trigger input Comparator_B input CB7 Analog input A7 for 10-bit ADC
P2.6/ PM_ACLK/ CB6 (/A6)	58	I/O	General-purpose digital I/O with port interrupt and mappable secondary function Default mapping: ACLK output Comparator_B input CB6 Analog input A6 for 10-bit ADC
P2.5/ PM_SVMOUT/ CB5 (/A5/ VREF+/ VeREF+)	59	I/O	General-purpose digital I/O with port interrupt and mappable secondary function Default mapping: SVM output Comparator_B input CB5 Analog input A5 for 10-bit ADC Output of reference voltage to the ADC Positive terminal for the ADC reference voltage for both sources, the internal reference voltage, or an external applied reference voltage
P2.4/ PM_RTCCLK/ CB4 (/A4/ VeREF-)	60	I/O	General-purpose digital I/O with port interrupt and mappable secondary function Default mapping: RTCCLK output Comparator_B input CB4 Analog input A4 for 10-bit ADC Negative terminal for the ADC reference voltage for an external applied reference voltage
P2.3/ PM_TA1CCR2A/ CB3 (/A3)	61	I/O	General-purpose digital I/O with port interrupt and mappable secondary function Default mapping: TA1 CCR2 compare output or capture input Comparator_B input CB3 Analog input A3 for 10-bit ADC
P2.2/ PM_TA1CCR1A/ CB2 (/A2)	62	I/O	General-purpose digital I/O with port interrupt and mappable secondary function Default mapping: TA1 CCR1 compare output or capture input Comparator_B input CB2 Analog input A2 for 10-bit ADC
P2.1/PM_TA1CCR0A/CB1(/A1)	63	I/O	General-purpose digital I/O with port interrupt and mappable secondary function Default mapping: TA1 CCR0 compare output or capture input Comparator_B input CB1 Analog input A1 for 10-bit ADC
P2.0/ PM_CBOUT1/ PM_TA1CLK/ CB0 (/A0)	64	I/O	General-purpose digital I/O with port interrupt and mappable secondary function Default mapping: Comparator_B output; TA1 clock input Comparator_B input CB0 Analog input A0 for 10-bit ADC
VSS - Exposed die attach pad			Ground supply **CAUTION:** The exposed die attach pad must be connected to a solid ground plane as this is the ground connection for the chip.

Table 4-2 describes the signals for the CC430F514x and CC430F512x devices.

Table 4-2. CC430F514x and CC430F512x Terminal Functions

TERMINAL		I/O(1)	DESCRIPTION
NAME	NO.		
P2.2/ PM_TA1CCR1A/ CB2/ (A2)	1	I/O	General-purpose digital I/O with port interrupt and mappable secondary function Default mapping: TA1 CCR1 compare output or capture input Comparator_B input CB2 Analog input A2 for 10-bit ADC (only CC430F514x)
P2.1/ PM_TA1CCR0A/ CB1/ (A1)	2	I/O	General-purpose digital I/O with port interrupt and mappable secondary function Default mapping: TA1 CCR0 compare output or capture input Comparator_B input CB1 Analog input A1 for 10-bit ADC (only CC430F514x)
P2.0/ PM_CBOUT1/ PM_TA1CLK/ CB0/ (A0)	3	I/O	General-purpose digital I/O with port interrupt and mappable secondary function Default mapping: Comparator_B output; TA1 clock input Comparator_B input CB0 Analog input A0 for 10-bit ADC (only CC430F514x)
P1.7/ PM_UCA0CLK/ PM_UCA0STE	4	I/O	General-purpose digital I/O with port interrupt and mappable secondary function Default mapping: USCI_A0 clock input/output; USCI_B0 SPI slave transmit enable
P1.6/ PM_UCA0TXD/ PM_UCA0SIMO	5	I/O	General-purpose digital I/O with port interrupt and mappable secondary function Default mapping: USCI_A0 UART transmit data; USCI_A0 SPI slave in master out
P1.5/ PM_UCA0RXD/ PM_UCA0SOMI	6	I/O	General-purpose digital I/O with port interrupt and mappable secondary function Default mapping: USCI_A0 UART receive data; USCI_A0 SPI slave out master in
VCORE	7		Regulated core power supply
DVCC	8		Digital power supply
P1.4/ PM_UCB0CLK/ PM_UCA0STE	9	I/O	General-purpose digital I/O with port interrupt and mappable secondary function Default mapping: USCI_B0 clock input/output; USCI_A0 SPI slave transmit enable
P1.3/ PM_UCB0SIMO/ PM_UCB0SDA	10	I/O	General-purpose digital I/O with port interrupt and mappable secondary function Default mapping: USCI_B0 SPI slave in master out; USCI_B0 I^2C data
P1.2/ PM_UCB0SOMI/ PM_UCB0SCL	11	I/O	General-purpose digital I/O with port interrupt and mappable secondary function Default mapping: USCI_B0 SPI slave out master in; UCSI_B0 I^2C clock
P1.1/ PM_RFGDO2	12	I/O	General-purpose digital I/O with port interrupt and mappable secondary function Default mapping: Radio GDO2 output
P1.0/ PM_RFGDO0	13	I/O	General-purpose digital I/O with port interrupt and mappable secondary function Default mapping: Radio GDO0 output
P3.7/ PM_SMCLK	14	I/O	General-purpose digital I/O with mappable secondary function Default mapping: SMCLK output
P3.6/ PM_RFGDO1	15	I/O	General-purpose digital I/O with mappable secondary function Default mapping: Radio GDO1 output
P3.5/ PM_TA0CCR4A	16	I/O	General-purpose digital I/O with mappable secondary function Default mapping: TA0 CCR4 compare output or capture input
P3.4/ PM_TA0CCR3A	17	I/O	General-purpose digital I/O with mappable secondary function Default mapping: TA0 CCR3 compare output or capture input
P3.3/ PM_TA0CCR2A	18	I/O	General-purpose digital I/O with mappable secondary function Default mapping: TA0 CCR2 compare output or capture input
P3.2/ PM_TA0CCR1A	19	I/O	General-purpose digital I/O with mappable secondary function Default mapping: TA0 CCR1 compare output or capture input
P3.1/ PM_TA0CCR0A	20	I/O	General-purpose digital I/O with mappable secondary function Default mapping: TA0 CCR0 compare output or capture input
P3.0/ PM_CBOUT0/ PM_TA0CLK	21	I/O	General-purpose digital I/O with mappable secondary function Default mapping: Comparator_B output; TA0 clock input
DVCC	22		Digital power supply
P2.7/ PM_ADC10CLK/ PM_DMAE0	23	I/O	General-purpose digital I/O with port interrupt and mappable secondary function Default mapping: ADC10CLK output; DMA external trigger input
P2.6/ PM_ACLK	24	I/O	General-purpose digital I/O with port interrupt and mappable secondary function Default mapping: ACLK output
RF_XIN	25	I	Input terminal for RF crystal oscillator, or external clock input

(1) I = input, O = output

Copyright © 2012–2018, Texas Instruments Incorporated

Table 4-2. CC430F514x and CC430F512x Terminal Functions (continued)

TERMINAL		I/O(1)	DESCRIPTION
NAME	NO.		
RF_XOUT	26	O	Output terminal for RF crystal oscillator
AVCC_RF	27		Radio analog power supply
AVCC_RF	28		Radio analog power supply
RF_P	29	RF I/O	Positive RF input to LNA in receive mode Positive RF output from PA in transmit mode
RF_N	30	RF I/O	Negative RF input to LNA in receive mode Negative RF output from PA in transmit mode
AVCC_RF	31		Radio analog power supply
AVCC_RF	32		Radio analog power supply
RBIAS	33		External bias resistor for radio reference current
GUARD	34		Power supply connection for digital noise isolation
PJ.0/ TDO	35	I/O	General-purpose digital I/O Test data output port
PJ.1/ TDI/ TCLK	36	I/O	General-purpose digital I/O Test data input or test clock input
PJ.2/ TMS	37	I/O	General-purpose digital I/O Test mode select
PJ.3/ TCK	38	I/O	General-purpose digital I/O Test clock
TEST/ SBWTCK	39	I	Test mode pin - select digital I/O on JTAG pins Spy-Bi-Wire input clock
$\overline{\text{RST}}$/NMI/ SBWTDIO	40	I/O	Reset input active low Nonmaskable interrupt input Spy-Bi-Wire data input/output
DVCC	41		Digital power supply
AVSS	42		Analog ground supply for ADC10
P5.1/ XOUT	43	I/O	General-purpose digital I/O Output terminal of crystal oscillator XT1
P5.0/ XIN	44	I/O	General-purpose digital I/O Input terminal for crystal oscillator XT1
AVCC	45		Analog power supply
P2.5/ PM_SVMOUT/ CB5/ (A5/ VREF+/VeREF+)	46	I/O	General-purpose digital I/O with port interrupt and mappable secondary function Default mapping: SVM output Comparator_B input CB5 Analog input A5 for 10-bit ADC (only CC430F514x) Positive terminal for the ADC reference voltage for both sources, the internal reference voltage, or an external applied reference voltage (only CC430F514x)
P2.4/ PM_RTCCLK/ CB4/ (A4/ VeREF-)	47	I/O	General-purpose digital I/O with port interrupt and mappable secondary function Default mapping: RTCCLK output Comparator_B input CB4 Analog input A4 for 10-bit ADC (only CC430F514x) Negative terminal for the ADC reference voltage for an external applied reference voltage (only CC430F514x)
P2.3/ PM_TA1CCR2A/ CB3/ (A3)	48	I/O	General-purpose digital I/O with port interrupt and mappable secondary function Default mapping: TA1 CCR2 compare output or capture input Comparator_B input CB3 Analog input A3 for 10-bit ADC (only CC430F514x)
VSS - Exposed die attach pad			Ground supply **CAUTION:** The exposed die attach pad must be connected to a solid ground plane as this is the ground connection for the chip.

5 Specifications

All graphs in this section are for typical conditions, unless otherwise noted.

Typical (TYP) values are specified at V_{CC} = 3.3 V and T_A = 25°C, unless otherwise noted.

5.1 Absolute Maximum Ratings(1)

over operating free-air temperature range (unless otherwise noted)

	MIN	MAX	UNIT
Voltage applied at DVCC and AVCC pins to V_{SS}	–0.3	4.1	V
Voltage applied to any pin (excluding VCORE, RF_P, RF_N, and R_BIAS)(2)	–0.3	V_{CC} + 0.3 , 4.1 V Maximum	V
Voltage applied to VCORE, RF_P, RF_N, and R_BIAS(2)	–0.3	2.0	V
Input RF level at pins RF_P and RF_N		10	dBm
Diode current at any device terminal		±2	mA
Storage temperature, T_{stg}(3)	–5	150	°C
Maximum junction temperature, T_J		95	°C

(1) Stresses beyond those listed under *Absolute Maximum Ratings* may cause permanent damage to the device. These are stress ratings only, and functional operation of the device at these or any other conditions beyond those indicated under *Recommended Operating Conditions* is not implied. Exposure to absolute-maximum-rated conditions for extended periods may affect device reliability.
(2) All voltages referenced to V_{SS}.
(3) Higher temperature may be applied during board soldering according to the current JEDEC J-STD-020 specification with peak reflow temperatures not higher than classified on the device label on the shipping boxes or reels.

5.2 ESD Ratings

			VALUE	UNIT
$V_{(ESD)}$	Electrostatic discharge	Human-body model (HBM), per ANSI/ESDA/JEDEC JS-001(1)	±1000	V
		Charged-device model (CDM), per JEDEC specification JESD22-C101(2)	±250	

(1) JEDEC document JEP155 states that 500-V HBM allows safe manufacturing with a standard ESD control process. Pins listed as ±1000 V may actually have higher performance.
(2) JEDEC document JEP157 states that 250-V CDM allows safe manufacturing with a standard ESD control process. Pins listed as ±250 V may actually have higher performance.

5.3 Recommended Operating Conditions

			MIN	NOM	MAX	UNIT
V_{CC}	Supply voltage range applied at all DVCC and AVCC pins(1)(2) during program execution and flash programming with PMM default settings. Radio is not operational with PMMCOREVx = 0, 1.(3)	PMMCOREVx = 0 (default after POR)	1.8		3.6	V
		PMMCOREVx = 1	2.0		3.6	
	Supply voltage range applied at all DVCC and AVCC pins(1)(2) during program execution, flash programming and radio operation with PMM default settings.(3)	PMMCOREVx = 2	2.2		3.6	
		PMMCOREVx = 3	2.4		3.6	
	Supply voltage range applied at all DVCC and AVCC pins(1)(2) during program execution, flash programming and radio operation with PMMCOREVx = 2, high-side SVS level lowered (SVSHRVLx = SVSHRRRLx = 1) or high-side SVS disabled (SVSHE = 0).(4)(3)	PMMCOREVx = 2, SVSHRVLx = SVSHRRRLx = 1 or SVSHE = 0	2.0		3.6	
V_{SS}	Supply voltage applied at the exposed die attach VSS and AVSS pin			0		V
T_A	Operating free-air temperature		–40		85	°C

(1) TI recommends powering AVCC and DVCC from the same source. A maximum difference of 0.3 V between AVCC and DVCC can be tolerated during power up and operation.
(2) The minimum supply voltage is defined by the supervisor SVS levels when it is enabled. See the Section 5.21 threshold parameters for the exact values and further details.
(3) Modules may have a different supply voltage range specification. See the specification of the respective module in this data sheet.
(4) Lowering the high-side SVS level or disabling the high-side SVS might cause the LDO to operate out of regulation but the core voltage still stays within its limits and is still supervised by the low-side SVS to ensure reliable operation.

Copyright © 2012–2018, Texas Instruments Incorporated

Recommended Operating Conditions *(continued)*

			MIN	NOM	MAX	UNIT
T_J	Operating junction temperature		–40		85	°C
C_{VCORE}	Recommended capacitor at VCORE			470		nF
	Reduced capacitor at VCORE	f_{SYSTEM} ≤ 16 MHz, PMMCOREVx ≤ 2, V_{CC} ≥ 2.2 V	100			
C_{DVCC}	Recommended capacitor at DVCC		4.7			µF
f_{SYSTEM}	Processor (MCLK) frequency(5) (see Figure 5-1)	PMMCOREVx = 0 (default condition)	0		8	MHz
		PMMCOREVx = 1	0		12	
		PMMCOREVx = 2	0		16	
		PMMCOREVx = 3	0		20	
P_{INT}	Internal power dissipation			$V_{CC} \times I_{DVCC}$		W
P_{IO}	I/O power dissipation of I/O pins powered by DVCC			$(V_{CC} - V_{IOH}) \times I_{IOH} + V_{IOL} \times I_{IOL}$		W
P_{MAX}	Maximum allowed power dissipation, $P_{MAX} > P_{IO} + P_{INT}$			$(T_J - T_A) / \theta_{JA}$		W

(5) Modules may have a different maximum input clock specification. See the specification of the respective module in this data sheet.

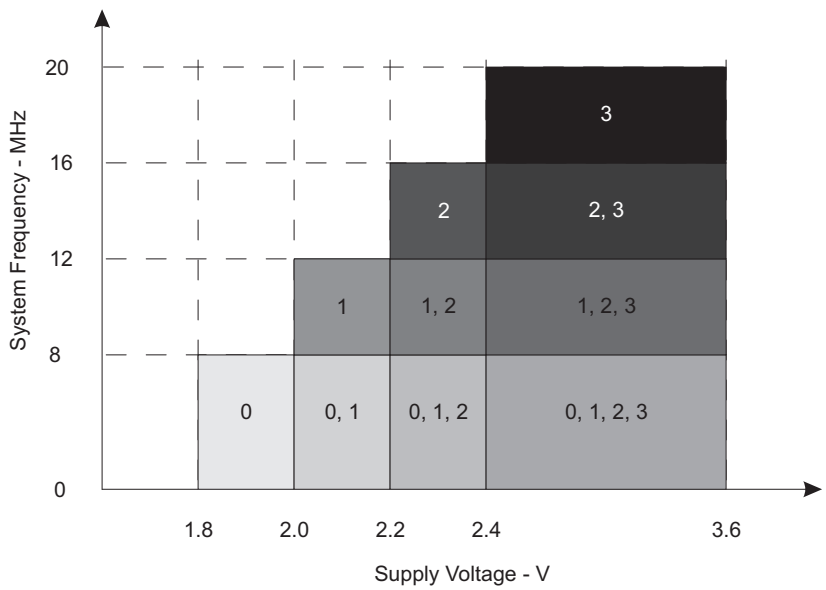

NOTE: The numbers within the fields are the supported PMMCOREVx settings.

Figure 5-1. Maximum System Frequency

5.4 Active Mode Supply Current Into V_{CC} Excluding External Current

over recommended operating free-air temperature (unless otherwise noted)(1)(2)(3)

PARAMETER	EXECUTION MEMORY	V_{CC}	PMMCOREVx	FREQUENCY ($f_{DCO} = f_{MCLK} = f_{SMCLK}$)										UNIT
				1 MHz		8 MHz		12 MHz		16 MHz		20 MHz		
				TYP	MAX	TYP	MAX	TYP	MAX	TYP	MAX	TYP	MAX	
$I_{AM,\ Flash}$(4)	Flash	3 V	0	0.23	0.26	1.35	1.60							mA
			1	0.25	0.28	1.55		2.30	2.65					
			2	0.27	0.30	1.75		2.60		3.45	3.90			
			3	0.28	0.32	1.85		2.75		3.65		4.55	5.10	
$I_{AM,\ RAM}$(5)	RAM	3 V	0	0.18	0.20	0.95	1.10							mA
			1	0.20	0.22	1.10		1.60	1.85					
			2	0.21	0.24	1.20		1.80		2.40	2.70			
			3	0.22	0.25	1.30		1.90		2.50		3.10	3.60	

(1) All inputs are tied to 0 V or to V_{CC}. Outputs do not source or sink any current.
(2) The currents are characterized with a Micro Crystal MS1V-T1K crystal with a load capacitance of 12.5 pF. The internal and external load capacitance are chosen to closely match the required 12.5 pF.
(3) Characterized with program executing typical data processing.
f_{ACLK} = 32786 Hz, $f_{DCO} = f_{MCLK} = f_{SMCLK}$ at specified frequency.
XTS = CPUOFF = SCG0 = SCG1 = OSCOFF= SMCLKOFF = 0.
(4) Active mode supply current when program executes in flash at a nominal supply voltage of 3 V.
(5) Active mode supply current when program executes in RAM at a nominal supply voltage of 3 V.

5.5 Typical Characteristics – Active Mode Supply Currents

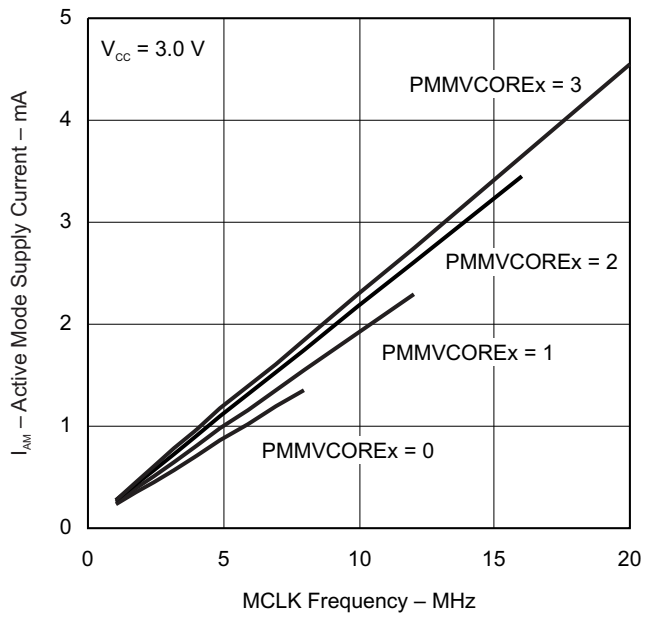

Figure 5-2. Active Mode Supply Current vs MCLK Frequency

Copyright © 2012–2018, Texas Instruments Incorporated

5.6 Low-Power Mode Supply Currents (Into V_{CC}) Excluding External Current

over recommended ranges of supply voltage and operating free-air temperature (unless otherwise noted)(1) (2)

PARAMETER		V_{CC}	PMMCOREVx	TEMPERATURE (T_A)								UNIT
				–40°C		25°C		60°C		85°C		
				TYP	MAX	TYP	MAX	TYP	MAX	TYP	MAX	
$I_{LPM0,1MHz}$	Low-power mode 0(3)(4)	2.2 V	0	80	100	80	100	80	100	80	100	µA
		3 V	3	90	110	90	110	90	110	90	110	
I_{LPM2}	Low-power mode 2(5)(4)	2.2 V	0	6.5	11	6.5	11	6.5	11	6.5	11	µA
		3 V	3	7.5	12	7.5	12	7.5	12	7.5	12	
$I_{LPM3,XT1LF}$	Low-power mode 3, crystal mode(6)(4) (see Figure 5-3)	3 V	0	1.8		2.0	2.6	3.0	4.0	4.4	5.9	µA
			1	1.9		2.1		3.2		4.8		
			2	2.0		2.2		3.4		5.1		
			3	2.0		2.2	2.9	3.5	4.8	5.3	7.4	
$I_{LPM3,VLO,WDT}$	Low-power mode 3, VLO mode, only WDT enabled(7)(4)	3 V	0	0.9		1.1	2.3	2.1	3.7	3.5	5.6	µA
			1	1.0		1.2		2.3		3.9		
			2	1.1		1.3		2.5		4.2		
			3	1.1		1.3	2.6	2.6	4.5	4.4	7.1	
I_{LPM4}	Low-power mode 4(8)(4) (see Figure 5-4)	3 V	0	0.8		1.0	2.2	2.0	3.6	3.4	5.5	µA
			1	0.9		1.1		2.2		3.8		
			2	1.0		1.2		2.4		4.1		
			3	1.0		1.2	2.5	2.5	4.4	4.3	7.0	
$I_{LPM3.5}$	Low-power mode 3.5(9) (see Figure 5-5)	2.2 V	N/A	0.7		0.9	1.4	1.0	1.5	1.2	1.7	µA
		3 V	N/A	1.0		1.0	1.5	1.2	1.7	1.4	1.8	
$I_{LPM4.5}$	Low-power mode 4.5(10) (see Figure 5-6)	2.2 V	N/A	0.2		0.25	0.7	0.4	0.9	0.6	1.1	µA
		3 V	N/A	0.3		0.3	0.8	0.4	0.9	0.7	1.2	

(1) All inputs are tied to 0 V or to V_{CC}. Outputs do not source or sink any current.
(2) The currents are characterized with a Micro Crystal MS1V-T1K crystal with a load capacitance of 12.5 pF. The internal and external load capacitance are chosen to closely match the required 12.5 pF.
(3) Current for watchdog timer clocked by SMCLK included. ACLK = low-frequency crystal operation (XTS = 0, XT1DRIVEx = 0).
CPUOFF = 1, SCG0 = 0, SCG1 = 0, OSCOFF = 0 (LPM0), f_{ACLK} = 32768 Hz, f_{MCLK} = 0 MHz, f_{SMCLK} = f_{DCO} = 1 MHz
(4) Current for brownout and high-side supervisor (SVS_H) normal mode included. Low-side supervisor (SVS_L) and low-side monitor (SVM_L) disabled. High-side monitor (SVM_H) disabled. RAM retention enabled.
(5) Current for watchdog timer clocked by ACLK and RTC clocked by LFXT1 (32768 Hz) included. ACLK = low-frequency crystal operation (XTS = 0, XT1DRIVEx = 0).
CPUOFF = 1, SCG0 = 0, SCG1 = 1, OSCOFF = 0 (LPM2), f_{ACLK} = 32768 Hz, f_{MCLK} = 0 MHz, f_{SMCLK} = f_{DCO} = 0 MHz, DCO setting = 1-MHz operation, DCO bias generator enabled.
(6) Current for watchdog timer clocked by ACLK and RTC clocked by LFXT1 (32768 Hz) included. ACLK = low-frequency crystal operation (XTS = 0, XT1DRIVEx = 0).
CPUOFF = 1, SCG0 = 1, SCG1 = 1, OSCOFF = 0 (LPM3), f_{ACLK} = 32768 Hz, f_{MCLK} = f_{SMCLK} = f_{DCO} = 0 MHz
(7) Current for watchdog timer clocked by VLO included.
CPUOFF = 1, SCG0 = 1, SCG1 = 1, OSCOFF = 0 (LPM3), f_{ACLK} = f_{VLO}, f_{MCLK} = f_{SMCLK} = f_{DCO} = 0 MHz
(8) CPUOFF = 1, SCG0 = 1, SCG1 = 1, OSCOFF = 1 (LPM4), f_{DCO} = f_{ACLK} = f_{MCLK} = f_{SMCLK} = 0 MHz
(9) Internal regulator disabled. No data retention except Backup RAM. CPUOFF = 1, SCG0 = 1, SCG1 = 1, OSCOFF = 1, PMMREGOFF = 1 (LPMx.5), RTC active (Calendar mode) with RTCHOLD = 0 (LPM3.5) and f_{XT1} = 32768 Hz, f_{DCO} = f_{ACLK} = f_{MCLK} = f_{SMCLK} = 0 MHz.
(10) Internal regulator disabled. No data retention except Backup RAM. CPUOFF = 1, SCG0 = 1, SCG1 = 1, OSCOFF = 1, PMMREGOFF = 1 (LPMx.5), RTC disabled with RTCHOLD = 1 (LPM4.5), f_{DCO} = f_{ACLK} = f_{MCLK} = f_{SMCLK} = 0 MHz.

Copyright © 2012–2018, Texas Instruments Incorporated

5.7 Typical Characteristics – Low-Power Mode Supply Currents

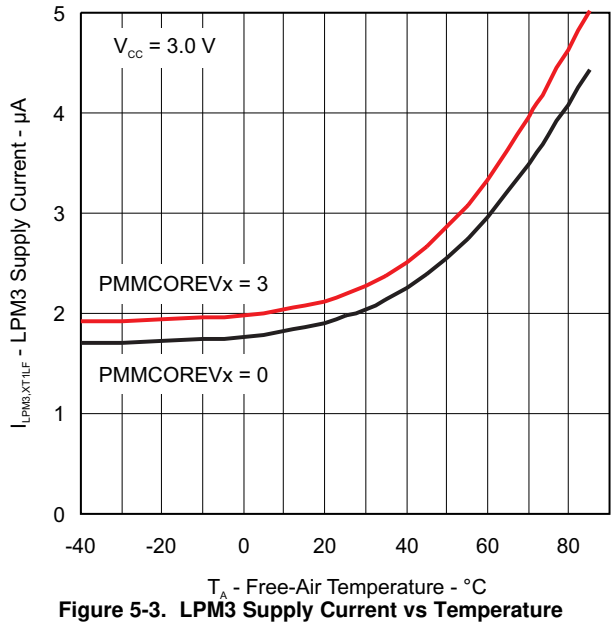

Figure 5-3. LPM3 Supply Current vs Temperature

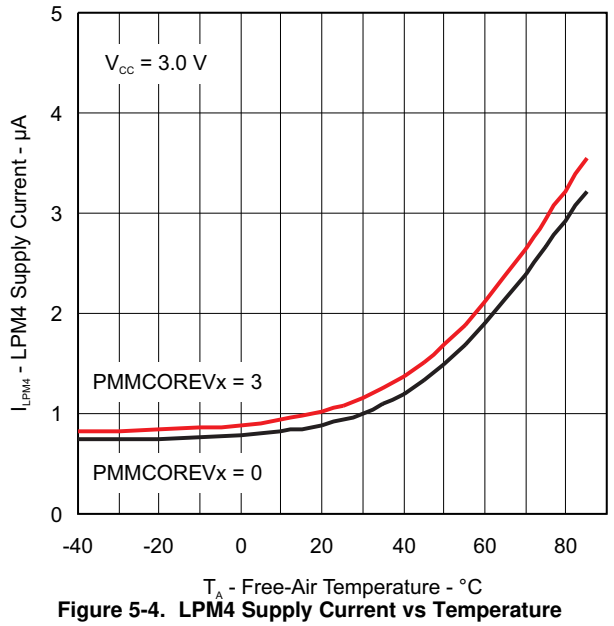

Figure 5-4. LPM4 Supply Current vs Temperature

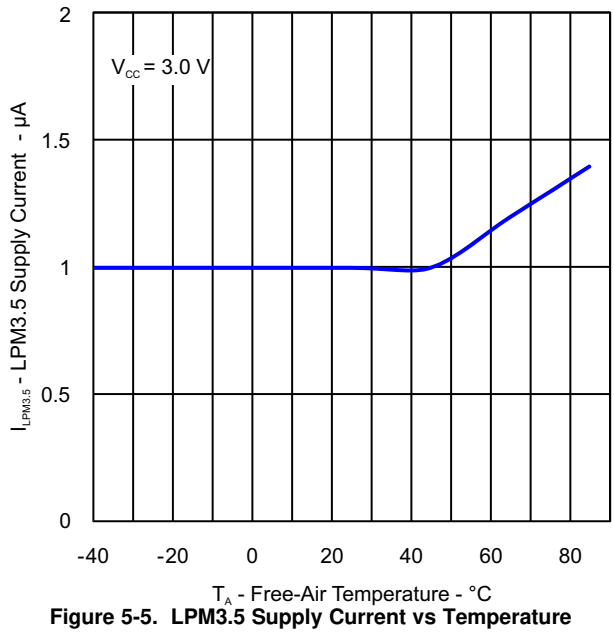

Figure 5-5. LPM3.5 Supply Current vs Temperature

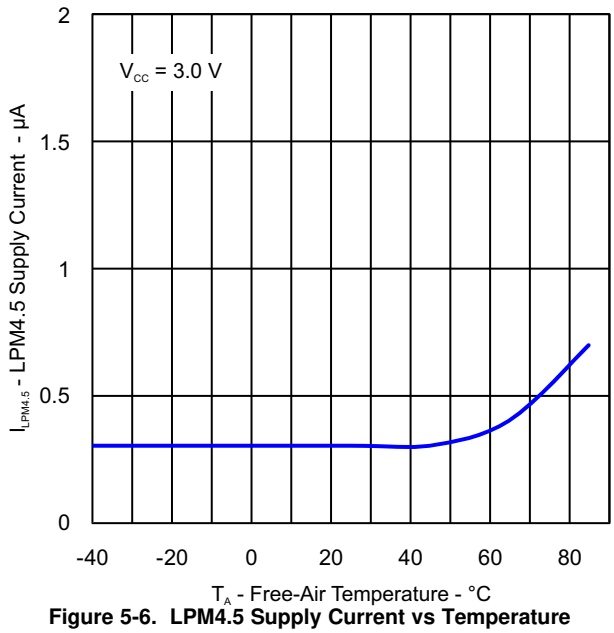

Figure 5-6. LPM4.5 Supply Current vs Temperature

Copyright © 2012–2018, Texas Instruments Incorporated

5.8 Low-Power Mode With LCD Supply Currents (Into V_{CC}) Excluding External Current

over recommended ranges of supply voltage and operating free-air temperature (unless otherwise noted)(1) (2)

PARAMETER		V_{CC}	PMMCOREVx	TEMPERATURE (T_A)								UNIT
				–40°C		25°C		60°C		85°C		
				TYP	MAX	TYP	MAX	TYP	MAX	TYP	MAX	
I_{LPM3} LCD, int. bias	Low-power mode 3 (LPM3) current, LCD 4-mux mode, internal biasing, charge pump disabled(3) (4)	3 V	0	3.1		3.3	4.0	4.3		5.8	7.4	µA
			1	3.2		3.4		4.5		6.2		
			2	3.3		3.5		4.7		6.5		
			3	3.3		3.5	4.3	4.8		6.7	8.9	
I_{LPM3} LCD,CP	Low-power mode 3 (LPM3) current, LCD 4-mux mode, internal biasing, charge pump enabled(3) (5)	2.2 V	0			4.0						µA
			1			4.1						
			2			4.2						
		3 V	0			4.2						
			1			4.3						
			2			4.5						
			3			4.5						

(1) All inputs are tied to 0 V or to V_{CC}. Outputs do not source or sink any current.
(2) The currents are characterized with a Micro Crystal MS1V-T1K crystal with a load capacitance of 12.5 pF. The internal and external load capacitance are chosen to closely match the required 12.5 pF.
(3) Current for watchdog timer and RTC clocked by ACLK included. ACLK = low-frequency crystal operation (XTS = 0, XT1DRIVEx = 0). CPUOFF = 1, SCG0 = 1, SCG1 = 1, OSCOFF = 0 (LPM3), f_{ACLK} = 32768 Hz, f_{MCLK} = f_{SMCLK} = f_{DCO} = 0 MHz
Current for brownout, high-side supervisor (SVS_H) normal mode included. Low-side supervisor (SVS_L) and low-side monitor (SVM_L) disabled. High-side monitor (SVM_H) disabled. RAM retention enabled.
(4) LCDMx = 11 (4-mux mode), LCDREXT = 0, LCDEXTBIAS = 0 (internal biasing), LCD2B = 0 (1/3 bias), LCDCPEN = 0 (charge pump disabled), LCDSSEL = 0, LCDPREx = 101, LCDDIVx = 00011 (f_{LCD} = 32768 Hz / 32 / 4 = 256 Hz)
Even segments S0, S2,... = 0, odd segments S1, S3,... = 1. No LCD panel load.
(5) LCDMx = 11 (4-mux mode), LCDREXT = 0, LCDEXTBIAS = 0 (internal biasing), LCD2B = 0 (1/3 bias), LCDCPEN = 1 (charge pump enabled), VLCDx = 1000 (V_{LCD}= 3 V, typical), LCDSSEL = 0, LCDPREx = 101, LCDDIVx = 00011 (f_{LCD} = 32768 Hz / 32 / 4 = 256 Hz)
Even segments S0, S2,... = 0, odd segments S1, S3,... = 1. No LCD panel load.

5.9 Thermal Resistance Characteristics, CC430F51xx

			PACKAGE	VALUE
θ_{JA}	Junction-to-ambient thermal resistance, still air	Low-K board	48 QFN (RGZ)	98°C/W
		High-K board	48 QFN (RGZ)	28°C/W

5.10 Thermal Resistance Characteristics, CC430F61xx

			PACKAGE	VALUE
θ_{JA}	Junction-to-ambient thermal resistance, still air	Low-K board	64 QFN (RGC)	83°C/W
		High-K board	64 QFN (RGC)	26°C/W

5.11 Digital Inputs

over recommended ranges of supply voltage and operating free-air temperature (unless otherwise noted)

PARAMETER		TEST CONDITIONS	V_{CC}	MIN	TYP	MAX	UNIT
V_{IT+}	Positive-going input threshold voltage		1.8 V	0.80		1.40	V
			3 V	1.50		2.10	
V_{IT-}	Negative-going input threshold voltage		1.8 V	0.45		1.00	V
			3 V	0.75		1.65	
V_{hys}	Input voltage hysteresis ($V_{IT+} – V_{IT–}$)		1.8 V	0.3		0.8	V
			3 V	0.4		1.0	
R_{Pull}	Pullup or pulldown resistor	For pullup: $V_{IN} = V_{SS}$, For pulldown: $V_{IN} = V_{CC}$		20	35	50	kΩ
C_I	Input capacitance	$V_{IN} = V_{SS}$ or V_{CC}			5		pF
$I_{lkg(Px.x)}$	High-impedance leakage current	See (1)(2)				±50	nA
$t_{(int)}$	External interrupt timing (external trigger pulse duration to set interrupt flag) (3)	Ports with interrupt capability (see block diagram and terminal function descriptions)	1.8 V, 3 V	20			ns

(1) The leakage current is measured with V_{SS} or V_{CC} applied to the corresponding pins, unless otherwise noted.
(2) The leakage of the digital port pins is measured individually. The port pin is selected for input and the pullup or pulldown resistor is disabled.
(3) An external signal sets the interrupt flag every time the minimum interrupt pulse duration $t_{(int)}$ is met. It may be set by trigger signals shorter than $t_{(int)}$.

Copyright © 2012–2018, Texas Instruments Incorporated

5.12 Digital Outputs

over recommended ranges of supply voltage and operating free-air temperature (unless otherwise noted)

PARAMETER		TEST CONDITIONS	V_{CC}	MIN	MAX	UNIT
V_{OH}	High-level output voltage, reduced drive strength[1] (see Figure 5-9 and Figure 5-10)	$I_{(OHmax)}$ = –1 mA, PxDS.y = 0[2]	1.8 V	V_{CC} – 0.25	V_{CC}	V
		$I_{(OHmax)}$ = –3 mA, PxDS.y = 0[3]		V_{CC} – 0.60	V_{CC}	
		$I_{(OHmax)}$ = –2 mA, PxDS.y = 0[2]	3 V	V_{CC} – 0.25	V_{CC}	
		$I_{(OHmax)}$ = –6 mA, PxDS.y = 0[3]		V_{CC} – 0.60	V_{CC}	
V_{OL}	Low-level output voltage, reduced drive strength[1] (see Figure 5-7 and Figure 5-8)	$I_{(OLmax)}$ = 1 mA, PxDS.y = 0[2]	1.8 V	V_{SS}	V_{SS} + 0.25	V
		$I_{(OLmax)}$ = 3 mA, PxDS.y = 0[3]		V_{SS}	V_{SS} + 0.60	
		$I_{(OLmax)}$ = 2 mA, PxDS.y = 0[2]	3 V	V_{SS}	V_{SS} + 0.25	
		$I_{(OLmax)}$ = 6 mA, PxDS.y = 0[3]		V_{SS}	V_{SS} + 0.60	
V_{OH}	High-level output voltage, full drive strength (see Figure 5-13 and Figure 5-14)	$I_{(OHmax)}$ = –3 mA, PxDS.y = 1[2]	1.8 V	V_{CC} – 0.25	V_{CC}	V
		$I_{(OHmax)}$ = –10 mA, PxDS.y = 1[3]		V_{CC} – 0.60	V_{CC}	
		$I_{(OHmax)}$ = –5 mA, PxDS.y = 1[2]	3 V	V_{CC} – 0.25	V_{CC}	
		$I_{(OHmax)}$ = –15 mA, PxDS.y = 1[3]		V_{CC} – 0.60	V_{CC}	
V_{OL}	Low-level output voltage, full drive strength (see Figure 5-11 and Figure 5-12)	$I_{(OLmax)}$ = 3 mA, PxDS.y = 1[2]	1.8 V	V_{SS}	V_{SS} + 0.25	V
		$I_{(OLmax)}$ = 10 mA, PxDS.y = 1[3]		V_{SS}	V_{SS} + 0.60	
		$I_{(OLmax)}$ = 5 mA, PxDS.y = 1[2]	3 V	V_{SS}	V_{SS} + 0.25	
		$I_{(OLmax)}$ = 15 mA, PxDS.y = 1[3]		V_{SS}	V_{SS} + 0.60	
$f_{Px.y}$	Port output frequency (with load)	C_L = 20 pF, R_L[4][5]	V_{CC} = 1.8 V, PMMCOREVx = 0		16	MHz
			V_{CC} = 3 V, PMMCOREVx = 2		25	
f_{Port_CLK}	Clock output frequency	C_L = 20 pF[5]	V_{CC} = 1.8 V, PMMCOREVx = 0		16	MHz
			V_{CC} = 3 V, PMMCOREVx = 2		25	

(1) Selecting reduced drive strength may reduce EMI.
(2) The maximum total current, $I_{(OHmax)}$ and $I_{(OLmax)}$, for all outputs combined should not exceed ±48 mA to hold the maximum voltage drop specified.
(3) The maximum total current, $I_{(OHmax)}$ and $I_{(OLmax)}$, for all outputs combined should not exceed ±100 mA to hold the maximum voltage drop specified.
(4) A resistive divider with 2 × R1 between V_{CC} and V_{SS} is used as load. The output is connected to the center tap of the divider. For full drive strength, R1 = 550 Ω. For reduced drive strength, R1 = 1.6 kΩ. C_L = 20 pF is connected to the output to V_{SS}.
(5) The output voltage reaches at least 10% and 90% V_{CC} at the specified toggle frequency.

5.13 Typical Characteristics – Outputs, Reduced Drive Strength (PxDS.y = 0)

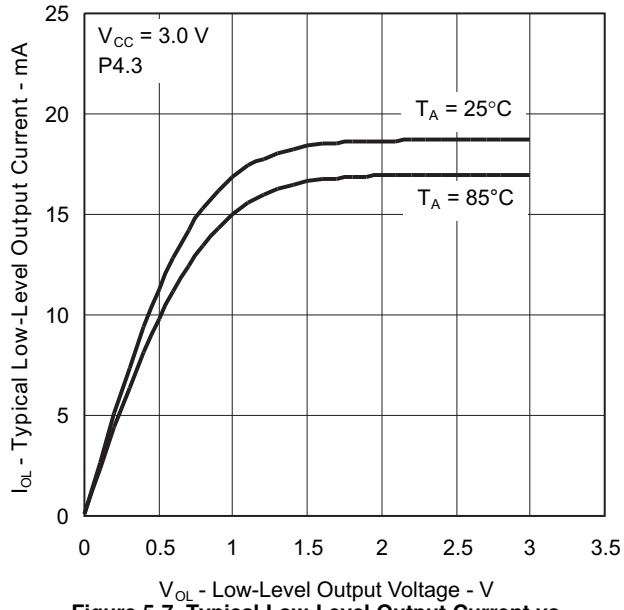

Figure 5-7. Typical Low-Level Output Current vs Low-Level Output Voltage

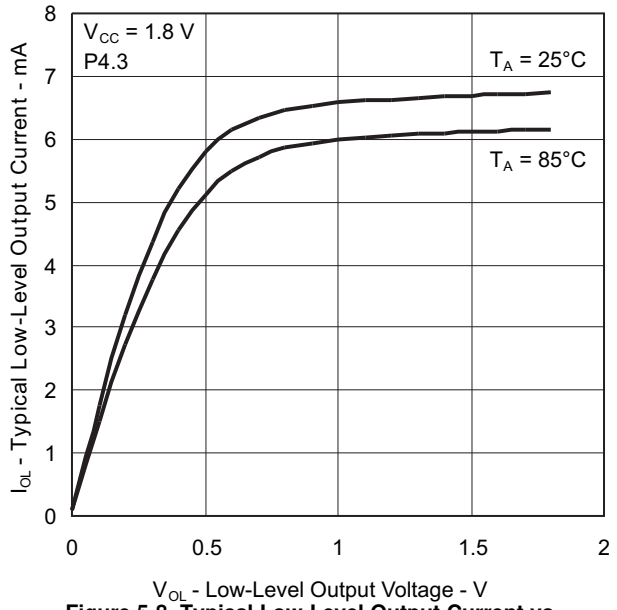

Figure 5-8. Typical Low-Level Output Current vs Low-Level Output Voltage

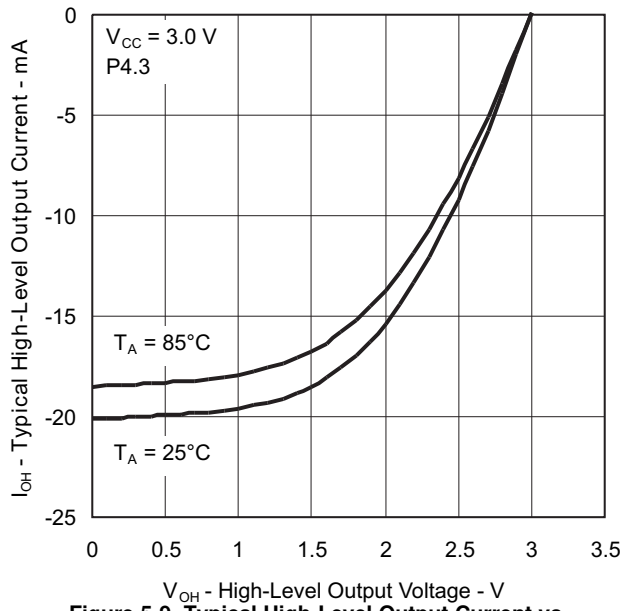

Figure 5-9. Typical High-Level Output Current vs High-Level Output Voltage

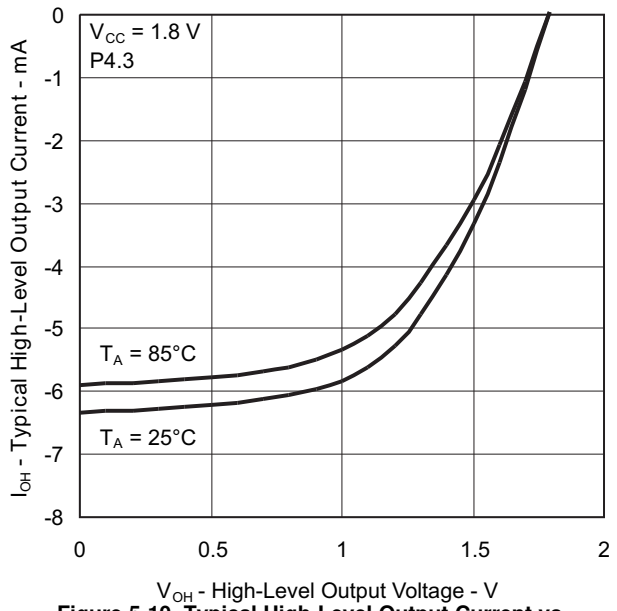

Figure 5-10. Typical High-Level Output Current vs High-Level Output Voltage

Copyright © 2012–2018, Texas Instruments Incorporated

5.14 Typical Characteristics – Outputs, Full Drive Strength (PxDS.y = 1)

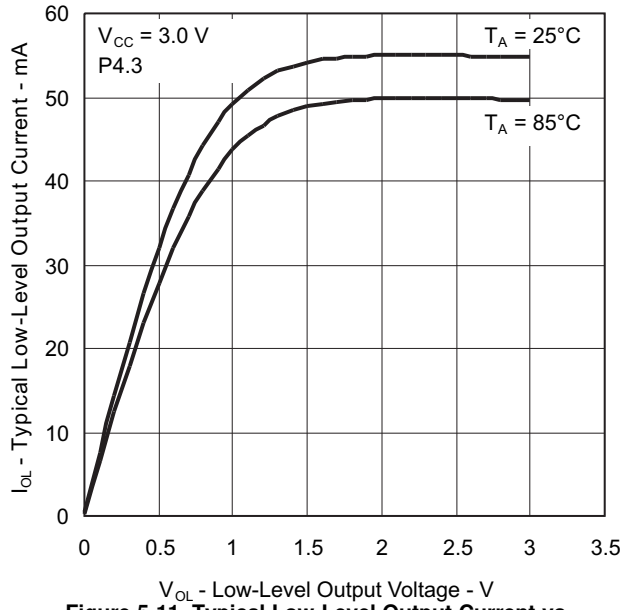

Figure 5-11. Typical Low-Level Output Current vs Low-Level Output Voltage

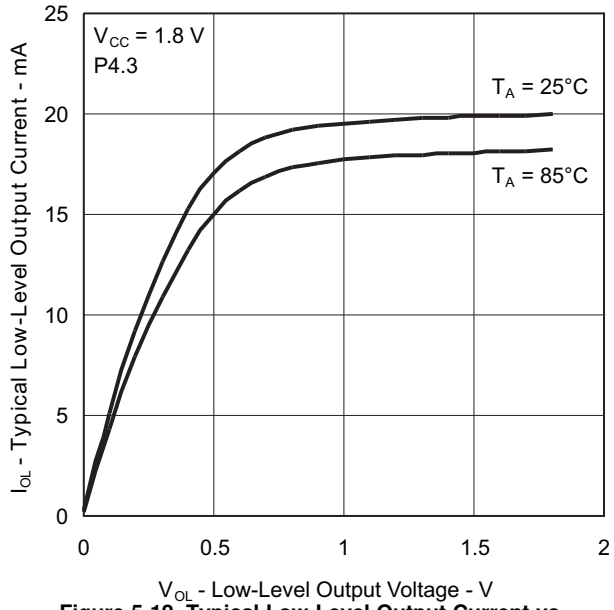

Figure 5-12. Typical Low-Level Output Current vs Low-Level Output Voltage

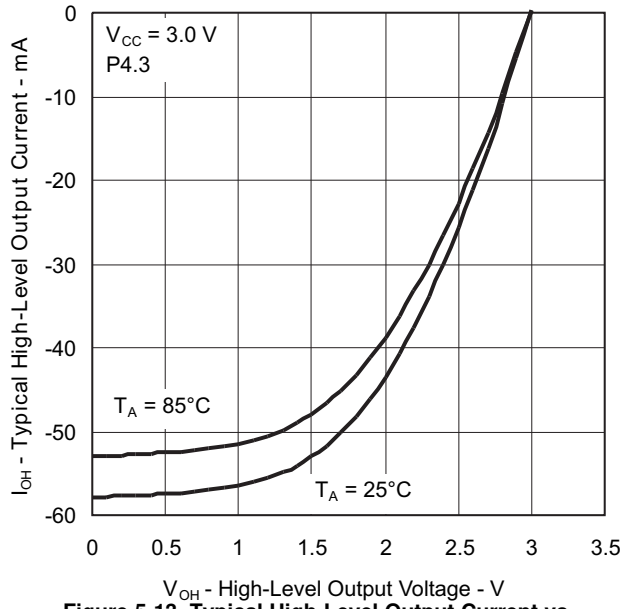

Figure 5-13. Typical High-Level Output Current vs High-Level Output Voltage

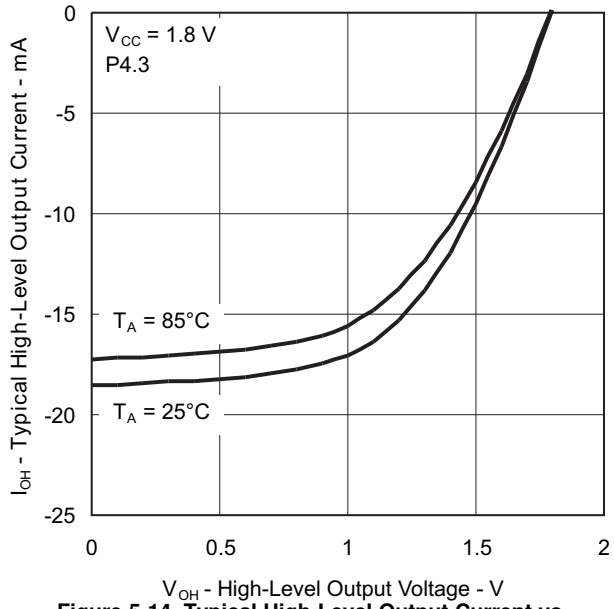

Figure 5-14. Typical High-Level Output Current vs High-Level Output Voltage

Copyright © 2012–2018, Texas Instruments Incorporated

5.15 Crystal Oscillator, XT1, Low-Frequency Mode(1)

over recommended ranges of supply voltage and operating free-air temperature (unless otherwise noted)

PARAMETER		TEST CONDITIONS	V_{CC}	MIN	TYP	MAX	UNIT
$\Delta I_{DVCC.LF}$	Differential XT1 oscillator crystal current consumption from lowest drive setting, LF mode	f_{OSC} = 32768 Hz, XTS = 0, XT1BYPASS = 0, XT1DRIVEx = 1, T_A = 25°C	3 V		0.075		µA
		f_{OSC} = 32768 Hz, XTS = 0, XT1BYPASS = 0, XT1DRIVEx = 2, T_A = 25°C			0.170		
		f_{OSC} = 32768 Hz, XTS = 0, XT1BYPASS = 0, XT1DRIVEx = 3, T_A = 25°C			0.290		
$f_{XT1,LF0}$	XT1 oscillator crystal frequency, LF mode	XTS = 0, XT1BYPASS = 0			32768		Hz
$f_{XT1,LF,SW}$	XT1 oscillator logic-level square-wave input frequency, LF mode	XTS = 0, XT1BYPASS = 1(2)(3)		10	32.768	50	kHz
OA_{LF}	Oscillation allowance for LF crystals(4)	XTS = 0, XT1BYPASS = 0, XT1DRIVEx = 0, $f_{XT1,LF}$ = 32768 Hz, $C_{L,eff}$ = 6 pF			210		kΩ
		XTS = 0, XT1BYPASS = 0, XT1DRIVEx = 1, $f_{XT1,LF}$ = 32768 Hz, $C_{L,eff}$ = 12 pF			300		
$C_{L,eff}$	Integrated effective load capacitance, LF mode(5)	XTS = 0, XCAPx = 0(6)			2		pF
		XTS = 0, XCAPx = 1			5.5		
		XTS = 0, XCAPx = 2			8.5		
		XTS = 0, XCAPx = 3			12.0		
	Duty cycle, LF mode	XTS = 0, Measured at ACLK, $f_{XT1,LF}$ = 32768 Hz		30%		70%	
$f_{Fault,LF}$	Oscillator fault frequency, LF mode(7)	XTS = 0(8)		10		10000	Hz
$t_{START,LF}$	Start-up time, LF mode	f_{OSC} = 32768 Hz, XTS = 0, XT1BYPASS = 0, XT1DRIVEx = 0, T_A = 25°C, $C_{L,eff}$ = 6 pF	3 V		1000		ms
		f_{OSC} = 32768 Hz, XTS = 0, XT1BYPASS = 0, XT1DRIVEx = 3, T_A = 25°C, $C_{L,eff}$ = 12 pF			500		

(1) To improve EMI on the XT1 oscillator, the following guidelines should be observed.
- Keep the trace between the device and the crystal as short as possible.
- Design a good ground plane around the oscillator pins.
- Prevent crosstalk from other clock or data lines into oscillator pins XIN and XOUT.
- Avoid running PCB traces underneath or adjacent to the XIN and XOUT pins.
- Use assembly materials and processes that avoid any parasitic load on the oscillator XIN and XOUT pins.
- If conformal coating is used, make sure that it does not induce capacitive or resistive leakage between the oscillator pins.

(2) When XT1BYPASS is set, XT1 circuits are automatically powered down. Input signal is a digital square wave with parametrics defined in the Schmitt-trigger Inputs section of this datasheet.

(3) Maximum frequency of operation of the entire device cannot be exceeded.

(4) Oscillation allowance is based on a safety factor of 5 for recommended crystals. The oscillation allowance is a function of the XT1DRIVEx settings and the effective load. In general, comparable oscillator allowance can be achieved based on the following guidelines, but should be evaluated based on the actual crystal selected for the application:
- For XT1DRIVEx = 0, $C_{L,eff} \le 6$ pF
- For XT1DRIVEx = 1, 6 pF $\le C_{L,eff} \le$ 9 pF
- For XT1DRIVEx = 2, 6 pF $\le C_{L,eff} \le$ 10 pF
- For XT1DRIVEx = 3, $C_{L,eff} \ge 6$ pF

(5) Includes parasitic bond and package capacitance (approximately 2 pF per pin).
Because the PCB adds additional capacitance, verify the correct load by measuring the ACLK frequency. For a correct setup, the effective load capacitance should always match the specification of the used crystal.

(6) Requires external capacitors at both terminals. Values are specified by crystal manufacturers.

(7) Frequencies below the MIN specification set the fault flag. Frequencies above the MAX specification do not set the fault flag. Frequencies between the MIN and MAX specifications might set the flag.

(8) Measured with logic-level input frequency but also applies to operation with crystals.

Copyright © 2012–2018, Texas Instruments Incorporated

5.16 Internal Very-Low-Power Low-Frequency Oscillator (VLO)

over recommended ranges of supply voltage and operating free-air temperature (unless otherwise noted)

PARAMETER		TEST CONDITIONS	V_{CC}	MIN	TYP	MAX	UNIT
f_{VLO}	VLO frequency	Measured at ACLK	1.8 V to 3.6 V	6	9.4	14	kHz
df_{VLO}/d_T	VLO frequency temperature drift	Measured at ACLK(1)	1.8 V to 3.6 V		0.5		%/°C
df_{VLO}/dV_{CC}	VLO frequency supply voltage drift	Measured at ACLK(2)	1.8 V to 3.6 V		4		%/V
	Duty cycle	Measured at ACLK	1.8 V to 3.6 V	40%	50%	60%	

(1) Calculated using the box method: (MAX(–40°C to 85°C) – MIN(–40°C to 85°C)) / MIN(–40°C to 85°C) / (85°C – (–40°C))
(2) Calculated using the box method: (MAX(1.8 V to 3.6 V) – MIN(1.8 V to 3.6 V)) / MIN(1.8 V to 3.6 V) / (3.6 V – 1.8 V)

5.17 Internal Reference, Low-Frequency Oscillator (REFO)

over recommended ranges of supply voltage and operating free-air temperature (unless otherwise noted)

PARAMETER		TEST CONDITIONS	V_{CC}	MIN	TYP	MAX	UNIT
I_{REFO}	REFO oscillator current consumption	T_A = 25°C	1.8 V to 3.6 V		3		µA
f_{REFO}	REFO frequency calibrated	Measured at ACLK	1.8 V to 3.6 V		32768		Hz
	REFO absolute tolerance calibrated	Full temperature range	1.8 V to 3.6 V			±3.5%	
	REFO absolute tolerance calibrated	T_A = 25°C	3 V			±1.5%	
df_{REFO}/d_T	REFO frequency temperature drift	Measured at ACLK(1)	1.8 V to 3.6 V		0.01		%/°C
df_{REFO}/dV_{CC}	REFO frequency supply voltage drift	Measured at ACLK(2)	1.8 V to 3.6 V		1.0		%/V
	Duty cycle	Measured at ACLK	1.8 V to 3.6 V	40%	50%	60%	
t_{START}	REFO start-up time	40%/60% duty cycle	1.8 V to 3.6 V		25		µs

(1) Calculated using the box method: (MAX(–40°C to 85°C) – MIN(–40°C to 85°C)) / MIN(–40°C to 85°C) / (85°C – (–40°C))
(2) Calculated using the box method: (MAX(1.8 V to 3.6 V) – MIN(1.8 V to 3.6 V)) / MIN(1.8 V to 3.6 V) / (3.6 V – 1.8 V)

Copyright © 2012–2018, Texas Instruments Incorporated

5.18 DCO Frequency

over recommended ranges of supply voltage and operating free-air temperature (unless otherwise noted)

PARAMETER		TEST CONDITIONS	MIN	TYP	MAX	UNIT
$f_{DCO(0,0)}$	DCO frequency (0, 0)(1)	DCORSELx = 0, DCOx = 0, MODx = 0	0.07		0.20	MHz
$f_{DCO(0,31)}$	DCO frequency (0, 31)(1)	DCORSELx = 0, DCOx = 31, MODx = 0	0.70		1.70	MHz
$f_{DCO(1,0)}$	DCO frequency (1, 0)(1)	DCORSELx = 1, DCOx = 0, MODx = 0	0.15		0.36	MHz
$f_{DCO(1,31)}$	DCO frequency (1, 31)(1)	DCORSELx = 1, DCOx = 31, MODx = 0	1.47		3.45	MHz
$f_{DCO(2,0)}$	DCO frequency (2, 0)(1)	DCORSELx = 2, DCOx = 0, MODx = 0	0.32		0.75	MHz
$f_{DCO(2,31)}$	DCO frequency (2, 31)(1)	DCORSELx = 2, DCOx = 31, MODx = 0	3.17		7.38	MHz
$f_{DCO(3,0)}$	DCO frequency (3, 0)(1)	DCORSELx = 3, DCOx = 0, MODx = 0	0.64		1.51	MHz
$f_{DCO(3,31)}$	DCO frequency (3, 31)(1)	DCORSELx = 3, DCOx = 31, MODx = 0	6.07		14.0	MHz
$f_{DCO(4,0)}$	DCO frequency (4, 0)(1)	DCORSELx = 4, DCOx = 0, MODx = 0	1.3		3.2	MHz
$f_{DCO(4,31)}$	DCO frequency (4, 31)(1)	DCORSELx = 4, DCOx = 31, MODx = 0	12.3		28.2	MHz
$f_{DCO(5,0)}$	DCO frequency (5, 0)(1)	DCORSELx = 5, DCOx = 0, MODx = 0	2.5		6.0	MHz
$f_{DCO(5,31)}$	DCO frequency (5, 31)(1)	DCORSELx = 5, DCOx = 31, MODx = 0	23.7		54.1	MHz
$f_{DCO(6,0)}$	DCO frequency (6, 0)(1)	DCORSELx = 6, DCOx = 0, MODx = 0	4.6		10.7	MHz
$f_{DCO(6,31)}$	DCO frequency (6, 31)(1)	DCORSELx = 6, DCOx = 31, MODx = 0	39.0		88.0	MHz
$f_{DCO(7,0)}$	DCO frequency (7, 0)(1)	DCORSELx = 7, DCOx = 0, MODx = 0	8.5		19.6	MHz
$f_{DCO(7,31)}$	DCO frequency (7, 31)(1)	DCORSELx = 7, DCOx = 31, MODx = 0	60		135	MHz
$S_{DCORSEL}$	Frequency step between range DCORSEL and DCORSEL + 1	$S_{RSEL} = f_{DCO(DCORSEL+1,DCO)} / f_{DCO(DCORSEL,DCO)}$	1.2		2.3	ratio
S_{DCO}	Frequency step between tap DCO and DCO + 1	$S_{DCO} = f_{DCO(DCORSEL,DCO+1)} / f_{DCO(DCORSEL,DCO)}$	1.02		1.12	ratio
	Duty cycle	Measured at SMCLK	40%	50%	60%	
df_{DCO}/dT	DCO frequency temperature drift	f_{DCO} = 1 MHz		0.1		%/°C
df_{DCO}/dV_{CC}	DCO frequency voltage drift	f_{DCO} = 1 MHz		1.9		%/V

(1) When selecting the proper DCO frequency range (DCORSELx), the target DCO frequency, f_{DCO}, should be set to reside within the range of $f_{DCO(n,\ 0),MAX} \le f_{DCO} \le f_{DCO(n,\ 31),MIN}$, where $f_{DCO(n,\ 0),MAX}$ represents the maximum frequency specified for the DCO frequency, range n, tap 0 (DCOx = 0) and $f_{DCO(n,31),MIN}$ represents the minimum frequency specified for the DCO frequency, range n, tap 31 (DCOx = 31). This ensures that the target DCO frequency resides within the range selected. It should also be noted that if the actual f_{DCO} frequency for the selected range causes the FLL or the application to select tap 0 or 31, the DCO fault flag is set to report that the selected range is at its minimum or maximum tap setting.

Figure 5-15. Typical DCO Frequency

Copyright © 2012–2018, Texas Instruments Incorporated

5.19 PMM, Brownout Reset (BOR)

over recommended ranges of supply voltage and operating free-air temperature (unless otherwise noted)

PARAMETER		TEST CONDITIONS	MIN	TYP	MAX	UNIT
$V_{(DVCC_BOR_IT-)}$	BOR_H on voltage, DV_{CC} falling level	$\lvert dDV_{CC}/d_t \rvert < 3$ V/s			1.45	V
$V_{(DVCC_BOR_IT+)}$	BOR_H off voltage, DV_{CC} rising level	$\lvert dDV_{CC}/d_t \rvert < 3$ V/s	0.80	1.30	1.50	V
$V_{(DVCC_BOR_hys)}$	BOR_H hysteresis		50		250	mV
t_{RESET}	Pulse duration required at $\overline{RST}$/NMI pin to accept a reset		2			µs

5.20 PMM, Core Voltage

over recommended ranges of supply voltage and operating free-air temperature (unless otherwise noted)

PARAMETER		TEST CONDITIONS	MIN	TYP	MAX	UNIT
V_{CORE3}(AM)	Core voltage, active mode, PMMCOREV = 3	2.4 V ≤ DV_{CC} ≤ 3.6 V		1.90		V
V_{CORE2}(AM)	Core voltage, active mode, PMMCOREV = 2	2.2 V ≤ DV_{CC} ≤ 3.6 V		1.80		V
V_{CORE1}(AM)	Core voltage, active mode, PMMCOREV = 1	2 V ≤ DV_{CC} ≤ 3.6 V		1.60		V
V_{CORE0}(AM)	Core voltage, active mode, PMMCOREV = 0	1.8 V ≤ DV_{CC} ≤ 3.6 V		1.40		V
V_{CORE3}(LPM)	Core voltage, low-current mode, PMMCOREV = 3	2.4 V ≤ DV_{CC} ≤ 3.6 V		1.93		V
V_{CORE2}(LPM)	Core voltage, low-current mode, PMMCOREV = 2	2.2 V ≤ DV_{CC} ≤ 3.6 V		1.90		V
V_{CORE1}(LPM)	Core voltage, low-current mode, PMMCOREV = 1	2 V ≤ DV_{CC} ≤ 3.6 V		1.70		V
V_{CORE0}(LPM)	Core voltage, low-current mode, PMMCOREV = 0	1.8 V ≤ DV_{CC} ≤ 3.6 V		1.50		V

Copyright © 2012–2018, Texas Instruments Incorporated

5.21 PMM, SVS High Side

over recommended ranges of supply voltage and operating free-air temperature (unless otherwise noted)

PARAMETER		TEST CONDITIONS	MIN	TYP	MAX	UNIT
$I_{(SVSH)}$	SVS current consumption	SVSHE = 0, DV_{CC} = 3.6 V		0		nA
		SVSHE = 1, DV_{CC} = 3.6 V, SVSHFP = 0		200		
		SVSHE = 1, DV_{CC} = 3.6 V, SVSHFP = 1		1.5		µA
$V_{(SVSH_IT-)}$	SVS_H on voltage level (1)	SVSHE = 1, SVSHRVL = 0	1.55	1.62	1.69	V
		SVSHE = 1, SVSHRVL = 1	1.75	1.82	1.89	
		SVSHE = 1, SVSHRVL = 2	1.95	2.02	2.09	
		SVSHE = 1, SVSHRVL = 3	2.05	2.12	2.19	
$V_{(SVSH_IT+)}$	SVS_H off voltage level (1)	SVSHE = 1, SVSMHRRL = 0	1.60	1.70	1.80	V
		SVSHE = 1, SVSMHRRL = 1	1.80	1.90	2.00	
		SVSHE = 1, SVSMHRRL = 2	2.00	2.10	2.20	
		SVSHE = 1, SVSMHRRL = 3	2.10	2.20	2.30	
		SVSHE = 1, SVSMHRRL = 4	2.25	2.35	2.50	
		SVSHE = 1, SVSMHRRL = 5	2.52	2.65	2.78	
		SVSHE = 1, SVSMHRRL = 6	2.85	3.00	3.15	
		SVSHE = 1, SVSMHRRL = 7	2.85	3.00	3.15	
$t_{pd(SVSH)}$	SVS_H propagation delay	SVSHE = 1, dV_{DVCC}/dt = 10 mV/µs, SVSHFP = 1		2.5		µs
		SVSHE = 1, dV_{DVCC}/dt = 1 mV/µs, SVSHFP = 0		20		
$t_{(SVSH)}$	SVS_H on or off delay time	SVSHE = 0 → 1, dV_{DVCC}/dt = 10 mV/µs, SVSHFP = 1		12.5		µs
		SVSHE = 0 → 1, dV_{DVCC}/dt = 1 mV/µs, SVSHFP = 0		100		
dV_{DVCC}/dt	DV_{CC} rise time		0		1000	V/s

(1) The SVS_H settings available depend on the VCORE (PMMCOREVx) setting. See the *Power Management Module and Supply Voltage Supervisor* chapter in the *CC430 Family User's Guide* on recommended settings and use.

5.22 PMM, SVM High Side

over recommended ranges of supply voltage and operating free-air temperature (unless otherwise noted)

PARAMETER		TEST CONDITIONS	MIN	TYP	MAX	UNIT
$I_{(SVMH)}$	SVM_H current consumption	SVMHE = 0, DV_{CC} = 3.6 V		0		nA
		SVMHE= 1, DV_{CC} = 3.6 V, SVMHFP = 0		200		
		SVMHE = 1, DV_{CC} = 3.6 V, SVMHFP = 1		1.5		µA
$V_{(SVMH)}$	SVM_H on or off voltage level (1)	SVMHE = 1, SVSMHRRL = 0	1.60	1.70	1.80	V
		SVMHE = 1, SVSMHRRL = 1	1.80	1.90	2.00	
		SVMHE = 1, SVSMHRRL = 2	2.00	2.10	2.20	
		SVMHE = 1, SVSMHRRL = 3	2.10	2.20	2.30	
		SVMHE = 1, SVSMHRRL = 4	2.25	2.35	2.50	
		SVMHE = 1, SVSMHRRL = 5	2.52	2.65	2.78	
		SVMHE = 1, SVSMHRRL = 6	2.85	3.00	3.15	
		SVMHE = 1, SVSMHRRL = 7	2.85	3.00	3.15	
		SVMHE = 1, SVMHOVPE = 1		3.75		
$t_{pd(SVMH)}$	SVM_H propagation delay	SVMHE = 1, dV_{DVCC}/dt = 10 mV/µs, SVMHFP = 1		2.5		µs
		SVMHE = 1, dV_{DVCC}/dt = 1 mV/µs, SVMHFP = 0		20		
$t_{(SVMH)}$	SVM_H on or off delay time	SVMHE = 0 → 1, dV_{DVCC}/dt = 10 mV/µs, SVMHFP = 1		12.5		µs
		SVMHE = 0 → 1, dV_{DVCC}/dt = 1 mV/µs, SVMHFP = 0		100		

(1) The SVM_H settings available depend on the VCORE (PMMCOREVx) setting. See the *Power Management Module and Supply Voltage Supervisor* chapter in the *CC430 Family User's Guide* on recommended settings and use.

Copyright © 2012–2018, Texas Instruments Incorporated

5.23 PMM, SVS Low Side

over recommended ranges of supply voltage and operating free-air temperature (unless otherwise noted)

PARAMETER		TEST CONDITIONS	MIN	TYP	MAX	UNIT
$I_{(SVSL)}$	SVS_L current consumption	SVSLE = 0, PMMCOREV = 2		0		nA
		SVSLE = 1, PMMCOREV = 2, SVSLFP = 0		200		
		SVSLE = 1, PMMCOREV = 2, SVSLFP = 1		1.5		µA
$t_{pd(SVSL)}$	SVS_L propagation delay	SVSLE = 1, dV_{CORE}/dt = 10 mV/µs, SVSLFP = 1		2.5		µs
		SVSLE = 1, dV_{CORE}/dt = 1 mV/µs, SVSLFP = 0		20		
$t_{(SVSL)}$	SVS_L on or off delay time	SVSLE = 0 → 1, dV_{CORE}/dt = 10 mV/µs, SVSLFP = 1		12.5		µs
		SVSLE = 0 → 1, dV_{CORE}/dt = 1 mV/µs, SVSLFP = 0		100		

5.24 PMM, SVM Low Side

over recommended ranges of supply voltage and operating free-air temperature (unless otherwise noted)

PARAMETER		TEST CONDITIONS	MIN	TYP	MAX	UNIT
$I_{(SVML)}$	SVM_L current consumption	SVMLE = 0, PMMCOREV = 2		0		nA
		SVMLE= 1, PMMCOREV = 2, SVMLFP = 0		200		
		SVMLE= 1, PMMCOREV = 2, SVMLFP = 1		1.5		µA
$t_{pd(SVML)}$	SVM_L propagation delay	SVMLE = 1, dV_{CORE}/dt = 10 mV/µs, SVMLFP = 1		2.5		µs
		SVMLE = 1, dV_{CORE}/dt = 1 mV/µs, SVMLFP = 0		20		
$t_{(SVML)}$	SVM_L on or off delay time	SVMLE = 0 → 1, dV_{CORE}/dt = 10 mV/µs, SVMLFP = 1		12.5		µs
		SVMLE = 0 → 1, dV_{CORE}/dt = 1 mV/µs, SVMLFP = 0		100		

5.25 Wake-up Times From Low-Power Modes and Reset

over recommended ranges of supply voltage and operating free-air temperature (unless otherwise noted)

PARAMETER		TEST CONDITIONS		MIN	TYP	MAX	UNIT
$t_{WAKE-UP-FAST}$	Wake-up time from LPM2, LPM3, or LPM4 to active mode(1)	PMMCOREV = SVSMLRRL = n (where n = 0, 1, 2, or 3), SVSLFP = 1	f_{MCLK} ≥ 4.0 MHz			5	µs
			f_{MCLK} < 4.0 MHz			6	
$t_{WAKE-UP-SLOW}$	Wake-up time from LPM2, LPM3, or LPM4 to active mode(2)(3)	PMMCOREV = SVSMLRRL = n (where n = 0, 1, 2, or 3), SVSLFP = 0			150	165	µs
$t_{WAKE-UP-LPM5}$	Wake-up time from LPMx.5 to active mode(4)				2	3	ms
$t_{WAKE-UP-RESET}$	Wake-up time from $\overline{RST}$ or BOR event to active mode(4)				2	3	ms

(1) This value represents the time from the wake-up event to the first active edge of MCLK. The wake-up time depends on the performance mode of the low-side supervisor (SVS_L) and low-side monitor (SVM_L). $t_{WAKE-UP-FAST}$ is possible with SVS_L and SVM_L in full performance mode or disabled. For specific register settings, see the *Low-Side SVS and SVM Control and Performance Mode Selection* section in the *Power Management Module and Supply Voltage Supervisor* chapter of the *CC430 Family User's Guide*.
(2) This value represents the time from the wake-up event to the first active edge of MCLK. The wake-up time depends on the performance mode of the low-side supervisor (SVS_L) and low-side monitor (SVM_L). $t_{WAKE-UP-SLOW}$ is set with SVS_L and SVM_L in normal mode (low current mode). For specific register settings, see the *Low-Side SVS and SVM Control and Performance Mode Selection* section in the *Power Management Module and Supply Voltage Supervisor* chapter of the *CC430 Family User's Guide*.
(3) The wake-up times from LPM0 and LPM1 to AM are not specified. They are proportional to MCLK cycle time but are not affected by the performance mode settings as for LPM2, LPM3, and LPM4.
(4) This value represents the time from the wake-up event to the reset vector execution.

5.26 Timer_A

over recommended ranges of supply voltage and operating free-air temperature (unless otherwise noted)

PARAMETER		TEST CONDITIONS	V_{CC}	MIN	TYP	MAX	UNIT
f_{TA}	Timer_A input clock frequency	Internal: SMCLK or ACLK, External: TACLK, Duty cycle = 50% ±10%	1.8 V, 3 V			25	MHz
$t_{TA,cap}$	Timer_A capture timing	All capture inputs, minimum pulse duration required for capture	1.8 V, 3 V	20			ns

5.27 USCI (UART Mode) Clock Frequency

PARAMETER		TEST CONDITIONS	MIN	MAX	UNIT
f_{USCI}	USCI input clock frequency	Internal: SMCLK or ACLK. External: UCLK Duty cycle = 50% ±10%		f_{SYSTEM}	MHz
f_{BITCLK}	BITCLK clock frequency (equals baud rate in MBaud)			1	MHz

5.28 USCI (UART Mode)

over recommended ranges of supply voltage and operating free-air temperature (unless otherwise noted)

PARAMETER		V_{CC}	MIN	MAX	UNIT
t_τ	UART receive deglitch time (1)	2.2 V	50	600	ns
		3 V	50	600	

(1) Pulses on the UART receive input (UCxRX) shorter than the UART receive deglitch time are suppressed. To ensure that pulses are correctly recognized, their duration should exceed the maximum specification of the deglitch time.

5.29 USCI (SPI Master Mode) Clock Frequency

PARAMETER		TEST CONDITIONS	MIN	MAX	UNIT
f_{USCI}	USCI input clock frequency	Internal: SMCLK or ACLK. Duty cycle = 50% ±10%		f_{SYSTEM}	MHz

5.30 USCI (SPI Master Mode)

over recommended ranges of supply voltage and operating free-air temperature (unless otherwise noted) (1) (see Figure 5-16 and Figure 5-17)

PARAMETER		TEST CONDITIONS	PMMCOREVx	V_{CC}	MIN	MAX	UNIT
$t_{SU,MI}$	SOMI input data setup time		0	1.8 V	55		ns
				3 V	38		
			3	2.4 V	30		
				3 V	25		
$t_{HD,MI}$	SOMI input data hold time		0	1.8 V	0		ns
				3 V	0		
			3	2.4 V	0		
				3 V	0		
$t_{VALID,MO}$	SIMO output data valid time (2)	UCLK edge to SIMO valid, C_L = 20 pF	0	1.8 V		20	ns
				3 V		18	
			3	2.4 V		16	
				3 V		15	
$t_{HD,MO}$	SIMO output data hold time (3)	C_L = 20 pF	0	1.8 V	–10		ns
				3 V	–8		
			3	2.4 V	–10		
				3 V	–8		

(1) $f_{UCxCLK} = 1/2t_{LO/HI}$ with $t_{LO/HI} \geq \max(t_{VALID,MO(USCI)} + t_{SU,SI(Slave)}, t_{SU,MI(USCI)} + t_{VALID,SO(Slave)})$
For the slave parameters $t_{SU,SI(Slave)}$ and $t_{VALID,SO(Slave)}$, see the SPI parameters of the attached slave.
(2) Specifies the time to drive the next valid data to the SIMO output after the output changing UCLK clock edge. See the timing diagrams in Figure 5-16 and Figure 5-17.
(3) Specifies how long data on the SIMO output is valid after the output changing UCLK clock edge. Negative values indicate that the data on the SIMO output can become invalid before the output changing clock edge observed on UCLK. See the timing diagrams in Figure 5-16 and Figure 5-17.

Copyright © 2012–2018, Texas Instruments Incorporated

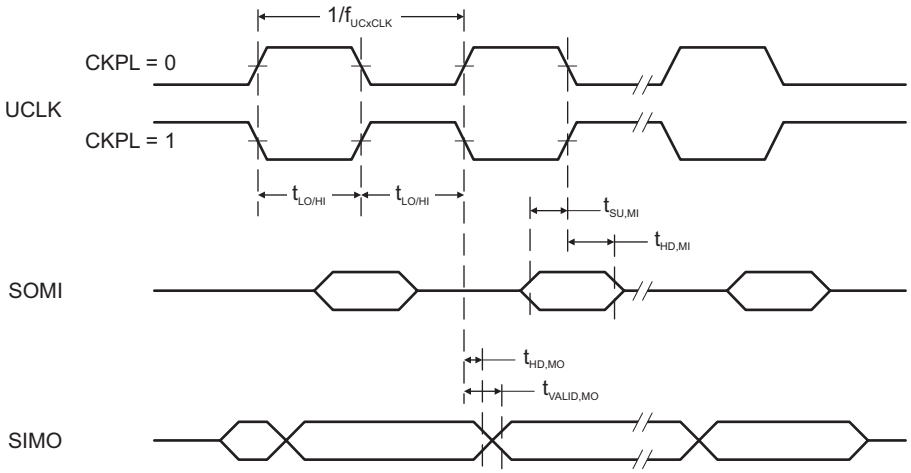

Figure 5-16. SPI Master Mode, CKPH = 0

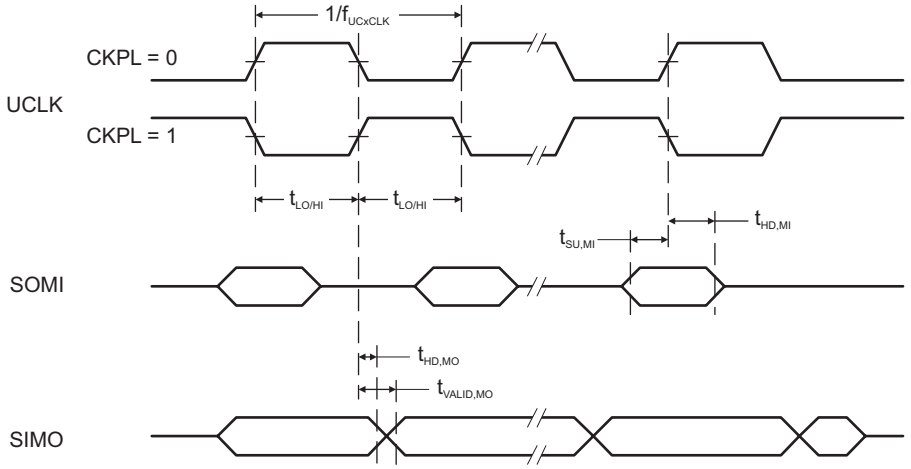

Figure 5-17. SPI Master Mode, CKPH = 1

5.31 USCI (SPI Slave Mode)

over recommended ranges of supply voltage and operating free-air temperature (unless otherwise noted)[1] (see Figure 5-18 and Figure 5-19)

PARAMETER		TEST CONDITIONS	PMMCOREVx	V_{CC}	MIN	MAX	UNIT
$t_{STE,LEAD}$	STE lead time, STE low to clock		0	1.8 V	11		ns
				3 V	8		
			3	2.4 V	7		
				3 V	6		
$t_{STE,LAG}$	STE lag time, Last clock to STE high		0	1.8 V	3		ns
				3 V	3		
			3	2.4 V	3		
				3 V	3		
$t_{STE,ACC}$	STE access time, STE low to SOMI data out		0	1.8 V		66	ns
				3 V		50	
			3	2.4 V		36	
				3 V		30	
$t_{STE,DIS}$	STE disable time, STE high to SOMI high impedance		0	1.8 V		30	ns
				3 V		23	
			3	2.4 V		16	
				3 V		13	
$t_{SU,SI}$	SIMO input data setup time		0	1.8 V	5		ns
				3 V	5		
			3	2.4 V	2		
				3 V	2		
$t_{HD,SI}$	SIMO input data hold time		0	1.8 V	5		ns
				3 V	5		
			3	2.4 V	5		
				3 V	5		
$t_{VALID,SO}$	SOMI output data valid time[2]	UCLK edge to SOMI valid, C_L = 20 pF	0	1.8 V		76	ns
				3 V		60	
			3	2.4 V		44	
				3 V		40	
$t_{HD,SO}$	SOMI output data hold time[3]	C_L = 20 pF	0	1.8 V	18		ns
				3 V	12		
			3	2.4 V	10		
				3 V	8		

(1) $f_{UCxCLK} = 1/2t_{LO/HI}$ with $t_{LO/HI} \geq \max(t_{VALID,MO(Master)} + t_{SU,SI(USCI)}, t_{SU,MI(Master)} + t_{VALID,SO(USCI)})$
For the master parameters $t_{SU,MI(Master)}$ and $t_{VALID,MO(Master)}$, see the SPI parameters of the attached master.
(2) Specifies the time to drive the next valid data to the SOMI output after the output changing UCLK clock edge. See the timing diagrams in Figure 5-18 and Figure 5-19.
(3) Specifies how long data on the SOMI output is valid after the output changing UCLK clock edge. See the timing diagrams in Figure 5-18 and Figure 5-19.

Copyright © 2012–2018, Texas Instruments Incorporated

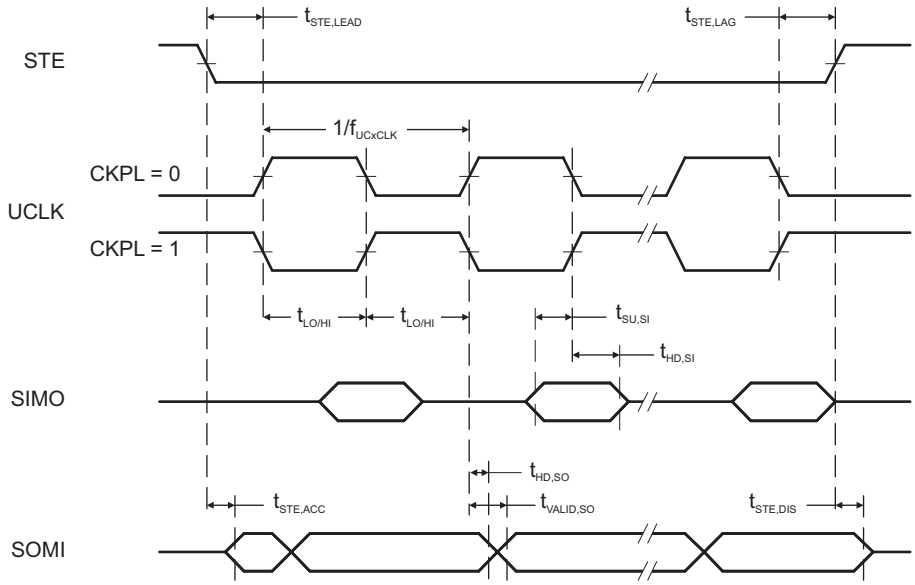

Figure 5-18. SPI Slave Mode, CKPH = 0

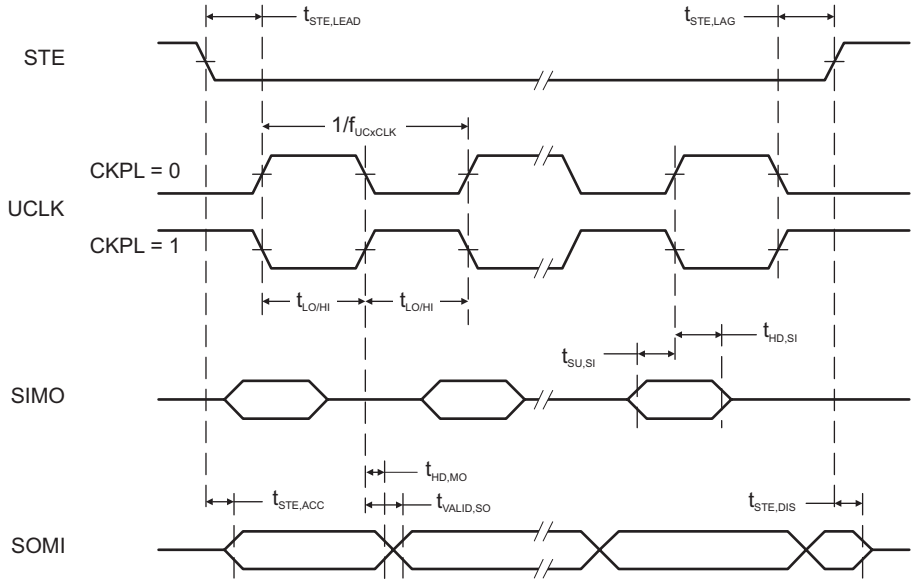

Figure 5-19. SPI Slave Mode, CKPH = 1

5.32 USCI (I^2C Mode)

over recommended ranges of supply voltage and operating free-air temperature (unless otherwise noted) (see Figure 5-20)

PARAMETER		TEST CONDITIONS	V_{CC}	MIN	MAX	UNIT
f_{USCI}	USCI input clock frequency	Internal: SMCLK or ACLK, External: UCLK, Duty cycle = 50% ±10%			f_{SYSTEM}	MHz
f_{SCL}	SCL clock frequency		2.2 V, 3 V	0	400	kHz
$t_{HD,STA}$	Hold time (repeated) START	f_{SCL} ≤ 100 kHz	2.2 V, 3 V	4.0		µs
		f_{SCL} > 100 kHz		0.6		
$t_{SU,STA}$	Setup time for a repeated START	f_{SCL} ≤ 100 kHz	2.2 V, 3 V	4.7		µs
		f_{SCL} > 100 kHz		0.6		
$t_{HD,DAT}$	Data hold time		2.2 V, 3 V	0		ns
$t_{SU,DAT}$	Data setup time		2.2 V, 3 V	250		ns
$t_{SU,STO}$	Setup time for STOP	f_{SCL} ≤ 100 kHz	2.2 V, 3 V	4.0		µs
		f_{SCL} > 100 kHz		0.6		
t_{SP}	Pulse duration of spikes suppressed by input filter		2.2 V	50	600	ns
			3 V	50	600	

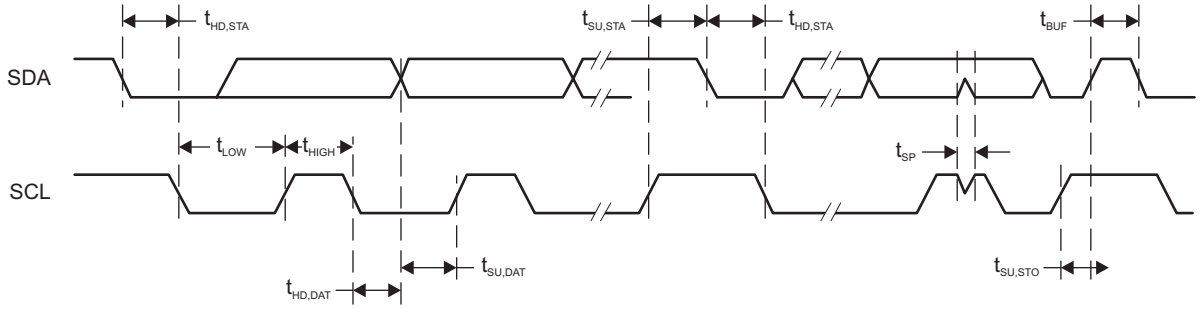

Figure 5-20. I^2C Mode Timing

Copyright © 2012–2018, Texas Instruments Incorporated

5.33 LCD_B Operating Conditions

PARAMETER		CONDITIONS	MIN	NOM	MAX	UNIT
$V_{CC,LCD_B,CPen,3.6}$	Supply voltage range, charge pump enabled, $V_{LCD} \leq 3.6$ V	LCDCPEN = 1, 0000 < VLCDx ≤ 1111 (charge pump enabled, $V_{LCD} \leq 3.6$ V)	2.2		3.6	V
$V_{CC,LCD_B,CPen,3.3}$	Supply voltage range, charge pump enabled, $V_{LCD} \leq 3.3$ V	LCDCPEN = 1, 0000 < VLCDx ≤ 1100 (charge pump enabled, $V_{LCD} \leq 3.3$ V)	2.0		3.6	V
$V_{CC,LCD_B,int.\ bias}$	Supply voltage range, internal biasing, charge pump disabled	LCDCPEN = 0, VLCDEXT = 0	2.4		3.6	V
$V_{CC,LCD_B,ext.\ bias}$	Supply voltage range, external biasing, charge pump disabled	LCDCPEN = 0, VLCDEXT = 0	2.4		3.6	V
$V_{CC,LCD_B,VLCDEXT}$	Supply voltage range, external LCD voltage, internal or external biasing, charge pump disabled	LCDCPEN = 0, VLCDEXT = 1	2.0		3.6	V
$V_{LCDCAP/R33}$	External LCD voltage at LCDCAP/R33, internal or external biasing, charge pump disabled	LCDCPEN = 0, VLCDEXT = 1	2.4		3.6	V
C_{LCDCAP}	Capacitor on LCDCAP when charge pump enabled	LCDCPEN = 1, VLCDx > 0000 (charge pump enabled)		4.7	10	µF
f_{Frame}	LCD frame frequency range	$f_{LCD} = 2 \times mux \times f_{FRAME}$ with mux = 1 (static), 2, 3, 4	0		100	Hz
$f_{ACLK,in}$	ACLK input frequency range		30	32	40	kHz
C_{Panel}	Panel capacitance	100-Hz frame frequency			10000	pF
V_{R33}	Analog input voltage at R33	LCDCPEN = 0, VLCDEXT = 1	2.4		V_{CC} + 0.2	V
$V_{R23,1/3bias}$	Analog input voltage at R23	LCDREXT = 1, LCDEXTBIAS = 1, LCD2B = 0	V_{R13}	V_{R03} + 2/3 × (V_{R33} – V_{R03})	V_{R33}	V
$V_{R13,1/3bias}$	Analog input voltage at R13 with 1/3 biasing	LCDREXT = 1, LCDEXTBIAS = 1, LCD2B = 0	V_{R03}	V_{R03} + 1/3 × (V_{R33} – V_{R03})	V_{R23}	V
$V_{R13,1/2bias}$	Analog input voltage at R13 with 1/2 biasing	LCDREXT = 1, LCDEXTBIAS = 1, LCD2B = 1	V_{R03}	V_{R03} + 1/2 × (V_{R33} – V_{R03})	V_{R33}	V
V_{R03}	Analog input voltage at R03	R0EXT = 1	V_{SS}			V
$V_{LCD} – V_{R03}$	Voltage difference between V_{LCD} and R03	LCDCPEN = 0, R0EXT = 1	2.4		V_{CC} + 0.2	V
$V_{LCDREF/R13}$	External LCD reference voltage applied at LCDREF/R13	VLCDREFx = 01	0.8	1.2	1.5	V

5.34 LCD_B Electrical Characteristics

over operating free-air temperature range (unless otherwise noted)

PARAMETER		TEST CONDITIONS	V_{CC}	MIN	TYP	MAX	UNIT
V_{LCD}	LCD voltage, with internal reference	VLCDx = 0000, VLCDEXT = 0	2.4 V to 3.6 V		V_{CC}		V
		LCDCPEN = 1, VLCDx = 0001	2 V to 3.6 V		2.59		
		LCDCPEN = 1, VLCDx = 0010			2.65		
		LCDCPEN = 1, VLCDx = 0011			2.71		
		LCDCPEN = 1, VLCDx = 0100			2.78		
		LCDCPEN = 1, VLCDx = 0101			2.84		
		LCDCPEN = 1, VLCDx = 0110			2.91		
		LCDCPEN = 1, VLCDx = 0111			2.97		
		LCDCPEN = 1, VLCDx = 1000			3.03		
		LCDCPEN = 1, VLCDx = 1001			3.09		
		LCDCPEN = 1, VLCDx = 1010			3.15		
		LCDCPEN = 1, VLCDx = 1011			3.22		
		LCDCPEN = 1, VLCDx = 1100			3.28		
		LCDCPEN = 1, VLCDx = 1101	2.2 V to 3.6 V		3.34		
		LCDCPEN = 1, VLCDx = 1110			3.40		
		LCDCPEN = 1, VLCDx = 1111			3.46	3.53	
$I_{CC,Peak,CP}$	Peak supply currents due to charge pump activities	LCDCPEN = 1, VLCDx = 1111	2.2 V		200		µA
$t_{LCD,CP,on}$	Time to charge C_{LCD} when discharge	C_{LCDCAP} = 4.7 µF, LCDCPEN = 0 → 1, VLCDx = 1111	2.2 V		100	500	ms
$I_{CP,Load}$	Maximum charge pump load current	LCDCPEN = 1, VLCDx = 1111	2.2 V	50			µA
$R_{LCD,Seg}$	LCD driver output impedance, segment lines	LCDCPEN = 1, VLCDx = 1000, I_{LOAD} = ±10 µA	2.2 V			10	kΩ
$R_{LCD,COM}$	LCD driver output impedance, common lines	LCDCPEN = 1, VLCDx = 1000, I_{LOAD} = ±10 µA	2.2 V			10	kΩ

Copyright © 2012–2018, Texas Instruments Incorporated

5.35 10-Bit ADC, Power Supply and Input Range Conditions

over recommended ranges of supply voltage and operating free-air temperature (unless otherwise noted)[1]

PARAMETER		TEST CONDITIONS	V_{CC}	MIN	TYP	MAX	UNIT
AV_{CC}	Analog supply voltage	AV_{CC} and DV_{CC} are connected together, AV_{SS} and DV_{SS} are connected together, $V_{(AVSS)} = V_{(DVSS)} = 0$ V		1.8		3.6	V
$V_{(Ax)}$	Analog input voltage range[2]	All ADC10_A pins: P1.0 to P1.5, P3.6, P3.7				AV_{CC}	V
I_{ADC10_A}	Operating supply current into AVCC terminal, REF module and reference buffer off.	$f_{ADC10CLK}$ = 5 MHz, ADC10ON = 1, REFON = 0, SHT0 = 0, SHT1 = 0, ADC10DIV = 0, ADC10SREF = 00	2.2 V		70	105	µA
			3 V		80	115	
	Operating supply current into AVCC terminal, REF module on, reference buffer on	$f_{ADC10CLK}$ = 5 MHz, ADC10ON = 1, REFON = 1, SHT0 = 0, SHT1 = 0, ADC10DIV = 0, ADC10SREF = 01	3 V		130	185	
	Operating supply current into AVCC terminal, REF module off, reference buffer on	$f_{ADC10CLK}$ = 5 MHz, ADC10ON = 1, REFON = 0, SHT0 = 0, SHT1 = 0, ADC10DIV = 0, ADC10SREF = 10, VEREF = 2.5 V	3 V		120	170	
	Operating supply current into AVCC terminal, REF module off, reference buffer off	$f_{ADC10CLK}$ = 5 MHz, ADC10ON = 1, REFON = 0, SHT0 = 0, SHT1 = 0, ADC10DIV = 0, ADC10SREF = 11, VEREF = 2.5 V	3 V		85	120	
C_I	Input capacitance	Only one terminal Ax can be selected at one time from the pad to the ADC10_A capacitor array including wiring and pad.	2.2 V		3.5		pF
R_I	Input MUX ON resistance	AV_{CC} > 2 V, 0 V ≤ V_{Ax} ≤ AV_{CC}				36	kΩ
		1.8 V < AV_{CC} < 2 V, 0 V ≤ V_{Ax} ≤ AV_{CC}				96	

(1) The leakage current is defined in the leakage current table with P2.x/Ax parameter.
(2) The analog input voltage range must be within the selected reference voltage range V_{R+} to V_{R-} for valid conversion results. The external reference voltage requires decoupling capacitors. See ().

5.36 10-Bit ADC, Timing Parameters

over recommended ranges of supply voltage and operating free-air temperature (unless otherwise noted)

PARAMETER		TEST CONDITIONS	V_{CC}	MIN	TYP	MAX	UNIT
$f_{ADC10CLK}$		For specified performance of ADC10_A linearity parameters	2.2 V, 3 V	0.45	5	5.5	MHz
$f_{ADC10OSC}$	Internal ADC10_A oscillator[1]	ADC10DIV = 0, $f_{ADC10CLK} = f_{ADC10OSC}$	2.2 V, 3 V	4.2	4.8	5.4	MHz
$t_{CONVERT}$	Conversion time	REFON = 0, Internal oscillator, 12 ADC10CLK cycles, 10-bit mode, $f_{ADC10OSC}$ = 4 MHz to 5 MHz	2.2 V, 3 V	2.4		3.0	µs
		External $f_{ADC10CLK}$ from ACLK, MCLK, or SMCLK, ADC10SSEL ≠ 0			12 × 1 / $f_{ADC10CLK}$		
$t_{ADC10ON}$	Turnon settling time of the ADC	See [2]				100	ns
t_{Sample}	Sampling time	R_S = 1000 Ω, R_I = 96 kΩ, C_I = 3.5 pF[3]	1.8 V	3			µs
		R_S = 1000 Ω, R_I = 36 kΩ, C_I = 3.5 pF[3]	3 V	1			

(1) The ADC10OSC is sourced directly from MODOSC inside the UCS.
(2) The condition is that the error in a conversion started after $t_{ADC10ON}$ is less than ±0.5 LSB. The reference and input signal are already settled.
(3) Approximately 8 Tau (τ) are needed to get an error of less than ±0.5 LSB

5.37 10-Bit ADC, Linearity Parameters

over recommended ranges of supply voltage and operating free-air temperature (unless otherwise noted)

PARAMETER		TEST CONDITIONS	MIN	TYP	MAX	UNIT
E_I	Integral linearity error	1.4 V ≤ (VEREF+ – VEREF-)min ≤ 1.6 V	–1.0		+1.0	LSB
		1.6 V < (VEREF+ – VEREF-)min ≤ V_{AVCC}	–1.0		+1.0	
E_D	Differential linearity error	(VEREF+ – VEREF-)min ≤ (VEREF+ – VEREF-), C_{VEREF+} = 20 pF	–1.0		+1.0	LSB
E_O	Offset error	(VEREF+ – VEREF-)min ≤ (VEREF+ – VEREF-), Internal impedance of source R_S < 100 Ω, C_{VEREF+} = 20 pF	–1.0		+1.0	LSB
E_G	Gain error, external reference	(VEREF+ – VEREF-)min ≤ (VEREF+ – VEREF-), C_{VEREF+} = 20 pF	–1.0		+1.0	LSB
	Gain error, external reference, buffered		–5		+5	$\%V_{REF}$
	Gain error, internal reference	See (1)	–1.5		+1.5	
E_T	Total unadjusted error, external reference	(VEREF+ – VEREF-)min ≤ (VEREF+ – VEREF-), C_{VEREF+} = 20 pF	–2.0	±1.0	+2.0	LSB
	Total unadjusted error, external reference, buffered		–5	±1.0	+5	
	Total unadjusted error, internal reference	See (1)	–1.5	±1.0	+1.5	$\%V_{REF}$

(1) Dominated by the absolute voltage of the integrated reference voltage.

5.38 REF, External Reference

over recommended ranges of supply voltage and operating free-air temperature (unless otherwise noted)(1)

PARAMETER		TEST CONDITIONS	V_{CC}	MIN	TYP	MAX	UNIT
VEREF+	Positive external reference voltage input	VEREF+ > VEREF-(2)		1.4		AV_{CC}	V
VEREF-	Negative external reference voltage input	VEREF+ > VEREF-(3)		0		1.2	V
VEREF+ – VEREF-	Differential external reference voltage input	VEREF+ > VEREF-(4)		1.4		AV_{CC}	V
$I_{(VEREF+)}$, $I_{(VEREF-)}$	Static input current	1.4 V ≤ VEREF+ ≤ V(AVCC), VEREF- = 0 V $f_{ADC10CLK}$ = 5 MHz, ADC10SHTx = 0x0001, Conversion rate 200 ksps	2.2 V, 3 V		±8.5	±26	µA
$I_{(VEREF+)}$, $I_{(VEREF-)}$	Static input current	1.4 V ≤ VEREF+ ≤ V(AVCC), VEREF- = 0 V $f_{ADC10CLK}$ = 5 MHZ, ADC10SHTX = 0x1000, Conversion rate 20 ksps	2.2 V, 3 V			±1	µA
$C_{(VEREF±)}$	Capacitance at VEREF+ or VEREF- terminal	See (5)		10			µF

(1) The external reference is used during ADC conversion to charge and discharge the capacitance array. The input capacitance, C_I, is also the dynamic load for an external reference during conversion. The dynamic impedance of the reference supply should follow the recommendations on analog-source impedance to allow the charge to settle for 12-bit accuracy.
(2) The accuracy limits the minimum positive external reference voltage. Lower reference voltage levels may be applied with reduced accuracy requirements.
(3) The accuracy limits the maximum negative external reference voltage. Higher reference voltage levels may be applied with reduced accuracy requirements.
(4) The accuracy limits minimum external differential reference voltage. Lower differential reference voltage levels may be applied with reduced accuracy requirements.
(5) Connect two decoupling capacitors, 10 µF and 100 nF, to VEREF to decouple the dynamic current required for an external reference source if it is used for the ADC10_A. See also the *CC430 Family User's Guide*.

Copyright © 2012–2018, Texas Instruments Incorporated

5.39 REF, Built-In Reference

over recommended ranges of supply voltage and operating free-air temperature (unless otherwise noted)[1]

PARAMETER		TEST CONDITIONS	V_{CC}	MIN	TYP	MAX	UNIT
VEREF+	Positive built-in reference voltage	REFVSEL = {2} for 2.5 V, REFON = REFOUT = 1	3 V		2.5	±1.5%	V
		REFVSEL = {1} for 2 V, REFON = REFOUT = 1	3 V		2.01	±1.5%	
		REFVSEL = {0} for 1.5 V, REFON = REFOUT = 1	2.2 V, 3 V		1.505	±1.5%	
$AV_{CC(min)}$	AVCC minimum voltage, Positive built-in reference active	REFVSEL = {0} for 1.5 V		1.8			V
		REFVSEL = {1} for 2 V		2.3			
		REFVSEL = {2} for 2.5 V		2.8			
I_{REF+}	Operating supply current into AVCC terminal[2]	$f_{ADC10CLK}$ = 5 MHz, REFON = 1, REFBURST = 0, REFVSEL = {0} for 1.5 V	3 V		15.5	19	µA
		$f_{ADC10CLK}$ = 5 MHz, REFON = 1, REFBURST = 0, REFVSEL = {1} for 2 V	3 V		18	24	
		$f_{ADC10CLK}$ = 5 MHz, REFON = 1, REFBURST = 0, REFVSEL = {2} for 2.5 V	3 V		21	30	
$I_{REF+,REFOUT}$	Operating supply current into AVCC terminal with REF output buffer enabled	REFON = 1, REFOUT = 1, REFBURST = 0	3 V		0.9	1.7	mA
$I_{L(VREF+)}$	Load-current regulation, VREF+ terminal[3]	REFVSEL = {0, 1, 2}, $I_{Load,VREF+}$ = +10 µA or –1000 µA, $AV_{CC} = AV_{CC(min)}$ for each reference level, REFON = REFOUT = 1				2500	µV/mA
C_{VREF+}	Capacitance at VREF+ terminals	REFON = REFOUT = 1		20		100	pF
TC_{REF+}	Temperature coefficient of built-in reference[4]	REFVSEL = {0, 1, 2}, REFON = 1			30	50	ppm/°C
I_{SENSOR}	Operating supply current into AVCC terminal[5]	REFON = 0, INCH = 0Ah, ADC10ON = NA, T_A = 30°C	2.2 V		150	180	µA
			3 V		150	190	
V_{SENSOR}	See [6]	ADC10ON = 1, INCH = 0Ah, T_A = 30°C	2.2 V		765		mV
			3 V		765		
V_{MID}	AVCC divider at channel 11	ADC10ON = 1, INCH = 0Bh, $V_{MID} \approx 0.5 \times V_{AVCC}$	2.2 V	1.06	1.1	1.14	V
			3 V	1.46	1.5	1.54	
$t_{SENSOR(sample)}$	Sample time required if channel 10 is selected[7]	ADC10ON = 1, INCH = 0Ah, Error of conversion result ≤ 1 LSB		30			µs
$t_{VMID(sample)}$	Sample time required if channel 11 is selected[8]	ADC10ON = 1, INCH = 0Bh, Error of conversion result ≤ 1 LSB		1			µs
PSRR_DC	Power supply rejection ratio (DC)	$AV_{CC} = AV_{CC(min)}$ to $AV_{CC(max)}$, T_A = 25°C, REFVSEL = {0, 1, 2}, REFON = 1			120	300	µV/V
PSRR_AC	Power supply rejection ratio (AC)	$AV_{CC} = AV_{CC(min)}$ to $AV_{CC(max)}$, T_A = 25°C, f = 1 kHz, ΔVpp = 100 mV, REFVSEL = (0, 1, 2}, REFON = 1			6.4		mV/V

(1) The leakage current is defined in the leakage current table with P2.x/Ax parameter.
(2) The internal reference current is supplied from the AVCC terminal. Consumption is independent of the ADC10ON control bit, unless a conversion is active. The REFON bit enables to settle the built-in reference before starting an analog-to-digital conversion.
(3) Contribution only due to the reference and buffer including package. This does not include resistance due to PCB trace and other factors. Positive load currents are flowing into the device.
(4) Calculated using the box method: (MAX(–40°C to 85°C) – MIN(–40°C to 85°C)) / MIN(–40°C to 85°C)/(85°C – (–40°C)).
(5) The sensor current I_{SENSOR} is consumed if (ADC10ON = 1 and REFON = 1) or (ADC10ON = 1 and INCH = 0Ah and sample signal is high). When REFON = 1, I_{SENSOR} is already included in I_{REF+}.
(6) The temperature sensor offset can be significant. TI recommends a single-point calibration to minimize the offset error of the built-in temperature sensor.
(7) The typical equivalent impedance of the sensor is 51 kΩ. The sample time required includes the sensor-on time $t_{SENSOR(on)}$.
(8) The on-time $t_{VMID(on)}$ is included in the sampling time $t_{VMID(sample)}$; no additional on time is needed.

Copyright © 2012–2018, Texas Instruments Incorporated

REF, Built-In Reference *(continued)*

over recommended ranges of supply voltage and operating free-air temperature (unless otherwise noted)[1]

PARAMETER		TEST CONDITIONS		V_{CC}	MIN	TYP	MAX	UNIT
t_{SETTLE}	Settling time of reference voltage[9]	$AV_{CC} = AV_{CC(min)}$ to $AV_{CC(max)}$, REFVSEL = {0, 1, 2}, REFON = 0 → 1	T_A = –40°C to 85°C			23	125	µs
			T_A = 25°C			23	50	
			T_A = 85°C			16	25	

(9) The condition is that the error in a conversion started after t_{REFON} is less than ±0.5 LSB.

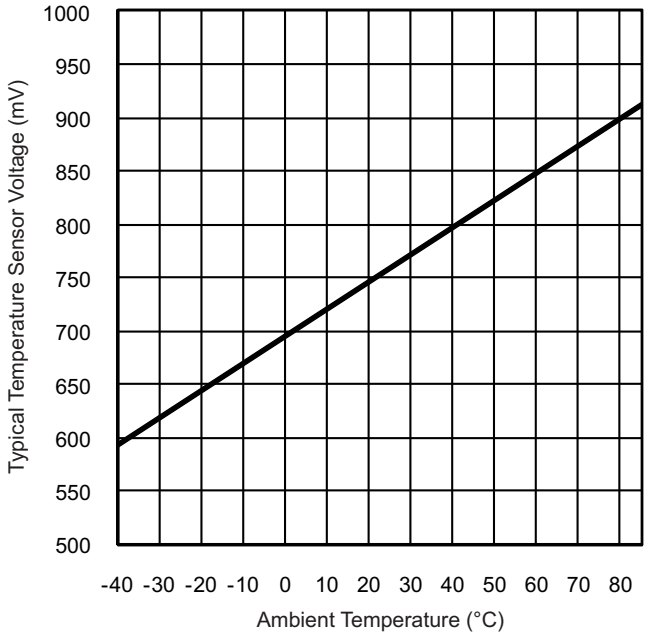

Figure 5-21. Typical Temperature Sensor Voltage

Copyright © 2012–2018, Texas Instruments Incorporated

5.40 Comparator_B

over recommended ranges of supply voltage and operating free-air temperature (unless otherwise noted)

PARAMETER		TEST CONDITIONS	V_{CC}	MIN	TYP	MAX	UNIT
V_{CC}	Supply voltage			1.8		3.6	V
I_{AVCC_COMP}	Comparator operating supply current into AVCC, Excludes reference resistor ladder	CBPWRMD = 00, CBON = 1, CBRSx = 00	1.8 V			40	µA
			2.2 V		31	50	
			3 V		32	65	
		CBPWRMD = 01, CBON = 1, CBRSx = 00	2.2 V, 3 V		10	17	
		CBPWRMD = 10, CBON = 1, CBRSx = 00	2.2 V, 3 V		0.2	0.85	
I_{AVCC_REF}	Quiescent current of resistor ladder into AVCC, Includes REF module current	CBREFACC = 0, CBREFLx = 01, CBRSx = 10, REFON = 0, CBON = 0	2.2 V, 3 V		33	40	µA
		CBREFACC = 1, CBREFLx = 01, CBRSx = 10, REFON = 0, CBON = 0	2.2 V, 3 V		10	17	
V_{REF}	Reference voltage level	CBREFLx = 01, CBREFACC = 0	≥1.8 V		1.49	±1.5%	V
V_{REF}	Reference voltage level	CBREFLx = 10, CBREFACC = 0	≥2.2 V		1.988	±1.5%	V
V_{REF}	Reference voltage level	CBREFLx = 11, CBREFACC = 0	≥3 V		2.5	±1.5%	V
V_{IC}	Common mode input range			0		V_{CC} – 1	V
V_{OFFSET}	Input offset voltage	CBPWRMD = 00				±20	mV
V_{OFFSET}	Input offset voltage	CBPWRMD = 01 or 10				±10	mV
C_{IN}	Input capacitance				5		pF
R_{SIN}	Series input resistance	On (switch closed)			3	4	kΩ
		Off (switch open)		50			MΩ
t_{PD}	Propagation delay, response time	CBPWRMD = 00, CBF = 0				450	ns
		CBPWRMD = 01, CBF = 0				600	
		CBPWRMD = 10, CBF = 0				50	µs
$t_{PD,filter}$	Propagation delay with filter active	CBPWRMD = 00, CBON = 1, CBF = 1, CBFDLY = 00		0.35	0.6	1.5	µs
		CBPWRMD = 00, CBON = 1, CBF = 1, CBFDLY = 01		0.6	1.0	1.8	
		CBPWRMD = 00, CBON = 1, CBF = 1, CBFDLY = 10		1.0	1.8	3.4	
		CBPWRMD = 00, CBON = 1, CBF = 1, CBFDLY = 11		1.8	3.4	6.5	
t_{EN_CMP}	Comparator enable time	CBON = 0 to CBON = 1, CBPWRMD = 00 or 01			1	2	µs
		CBON = 0 to CBON = 1, CBPWRMD = 10				100	
t_{EN_REF}	Resistor reference enable time	CBON = 0 to CBON = 1			1.0	1.5	µs
TC_{CB_REF}	Temperature coefficient reference of V_{CB_REF}					50	ppm/°C
V_{CB_REF}	Reference voltage for a given tap	VIN = reference into resistor ladder, n = 0 to 31		VIN × (n + 0.5) / 32	VIN × (n + 1) / 32	VIN × (n + 1.5) / 32	V

5.41 Flash Memory

over recommended ranges of supply voltage and operating free-air temperature (unless otherwise noted)

PARAMETER		T_J	MIN	TYP	MAX	UNIT
$DV_{CC(PGM/ERASE)}$	Program or erase supply voltage		1.8		3.6	V
I_{PGM}	Average supply current from DVCC during program			3	5	mA
I_{ERASE}	Average supply current from DVCC during erase			2	6.5	mA
I_{MERASE}, I_{BANK}	Average supply current from DVCC during mass erase or bank erase			2	6.5	mA
t_{CPT}	Cumulative program time(1)				16	ms
	Program and erase endurance		10^4	10^5		cycles
$t_{Retention}$	Data retention duration	25°C	100			years
t_{Word}	Word or byte program time(2)		64		85	µs
$t_{Block, 0}$	Block program time for first byte or word(2)		49		65	µs
$t_{Block, 1-(N-1)}$	Block program time for each additional byte or word, except for last byte or word(2)		37		49	µs
$t_{Block, N}$	Block program time for last byte or word(2)		55		73	µs
t_{Erase}	Erase time for segment erase, mass erase, and bank erase when available(2)		23		32	ms
$f_{MCLK,MGR}$	MCLK frequency in marginal read mode (FCTL4.MGR0 = 1 or FCTL4. MGR1 = 1)		0		1	MHz

(1) The cumulative program time must not be exceeded when writing to a 128-byte flash block. This parameter applies to all programming methods: individual word or byte write and block write modes.
(2) These values are hardwired into the state machine of the flash controller.

5.42 JTAG and Spy-Bi-Wire Interface

over recommended ranges of supply voltage and operating free-air temperature (unless otherwise noted)

PARAMETER		V_{CC}	MIN	TYP	MAX	UNIT
f_{SBW}	Spy-Bi-Wire input frequency	2.2 V, 3 V	0		20	MHz
$t_{SBW,Low}$	Spy-Bi-Wire low clock pulse duration	2.2 V, 3 V	0.025		15	µs
$t_{SBW, En}$	Spy-Bi-Wire enable time (TEST high to acceptance of first clock edge)(1)	2.2 V, 3 V			1	µs
$t_{SBW,Rst}$	Spy-Bi-Wire return to normal operation time		15		100	µs
f_{TCK}	TCK input frequency, 4-wire JTAG(2)	2.2 V	0		5	MHz
		3 V	0		10	MHz
$R_{internal}$	Internal pulldown resistance on TEST	2.2 V, 3 V	45	60	80	kΩ

(1) Tools that access the Spy-Bi-Wire interface must wait for the minimum $t_{SBW,En}$ time after pulling the TEST/SBWTCK pin high before applying the first SBWTCK clock edge.
(2) f_{TCK} may be restricted to meet the timing requirements of the module selected.

Copyright © 2012–2018, Texas Instruments Incorporated

5.43 RF1A CC1101-Based Radio Parameters

5.44 RF1A Recommended Operating Conditions

PARAMETER	TEST CONDITIONS	MIN	TYP	MAX	UNIT
V_{CC}	Supply voltage range during radio operation	2.0		3.6	V
PMMCOREVx	Core voltage range, PMMCOREVx setting during radio operation	2		3	
RF range	300 MHz range	300		348	MHz
	400 MHz range	389 (1)		464	
	800 and 900 MHz range	779		928	
Data rate	2-FSK	0.6		500	kBaud
	2-GFSK, OOK, and ASK	0.6		250	
	(Shaped) MSK (also known as differential offset QPSK) (2)	26		500	
RF crystal frequency			26	27	MHz
RF crystal tolerance	Total tolerance including initial tolerance, crystal loading, aging, and temperature dependency (3)		±40		ppm
RF crystal load capacitance		10	13	20	pF
RF crystal effective series resistance				100	Ω

(1) If using a 27-MHz crystal, the lower frequency limit for this band is 392 MHz.
(2) If using optional Manchester encoding, the data rate in kbps is half the baud rate.
(3) The acceptable crystal tolerance depends on frequency band, channel bandwidth, and spacing. Also see *DN005 CC11xx Sensitivity versus Frequency Offset and Crystal Accuracy*.

5.45 RF Crystal Oscillator, XT2

T_A = 25°C, V_{CC} = 3 V (unless otherwise noted) (1)

PARAMETER	TEST CONDITIONS	MIN	TYP	MAX	UNIT
Start-up time (2)			150	810	µs
Duty cycle		45%	50%	55%	

(1) All measurement results are obtained using the EM430F6137RF900 with BOM according to tested frequency range (see Table 7-1).
(2) The start-up time depends to a very large degree on the used crystal.

5.46 Current Consumption, Reduced-Power Modes

T_A = 25°C, V_{CC} = 3 V (unless otherwise noted) (1)

PARAMETER	TEST CONDITIONS	MIN	TYP	MAX	UNIT
Current consumption	RF crystal oscillator only (2)		100		µA
	IDLE state (including RF crystal oscillator)		1.7		mA
	FSTXON state (only the frequency synthesizer is running) (3)		9.5		

(1) All measurement results are obtained using the EM430F6137RF900 with BOM according to tested frequency range (see Table 7-1).
(2) To measure the current, follow this sequence:
- Enable XT2 with XOSC_FORCE_ON = 1.
- Set radio to sleep mode.
- Disable XT2 clock requests from any module.

(3) This current consumption is also representative of other intermediate states when going from IDLE to RX or TX, including the calibration state.

5.47 Current Consumption, Receive Mode

T_A = 25°C, V_{CC} = 3 V (unless otherwise noted)[1] [2]

PARAMETER	FREQUENCY (MHz)	DATA RATE (kBaud)	TEST CONDITIONS		MIN	TYP	MAX	UNIT
Current consumption, RX	315	1.2	Register settings optimized for reduced current	Input at –100 dBm (close to sensitivity limit)		17		mA
				Input at –40 dBm (well above sensitivity limit)		16		
		38.4		Input at –100 dBm (close to sensitivity limit)		17		
				Input at –40 dBm (well above sensitivity limit)		16		
		250		Input at –100 dBm (close to sensitivity limit)		18		
				Input at –40 dBm (well above sensitivity limit)		16.5		
	433	1.2	Register settings optimized for reduced current	Input at –100 dBm (close to sensitivity limit)		18		
				Input at –40 dBm (well above sensitivity limit)		17		
		38.4		Input at –100 dBm (close to sensitivity limit)		18		
				Input at –40 dBm (well above sensitivity limit)		17		
		250		Input at –100 dBm (close to sensitivity limit)		18.5		
				Input at –40 dBm (well above sensitivity limit)		17		
	868, 915	1.2	Register settings optimized for reduced current[3]	Input at –100 dBm (close to sensitivity limit)		16		
				Input at –40 dBm (well above sensitivity limit)		15		
		38.4		Input at –100 dBm (close to sensitivity limit)		16		
				Input at –40 dBm (well above sensitivity limit)		15		
		250		Input at –100 dBm (close to sensitivity limit)		16		
				Input at –40 dBm (well above sensitivity limit)		15		

(1) All measurement results are obtained using the EM430F6137RF900 with BOM according to tested frequency range (see Table 7-1).
(2) Reduced current setting (MDMCFG2.DEM_DCFILT_OFF = 1) gives a slightly lower current consumption at the cost of a reduction in sensitivity. See Section 5.53 through Section 5.56 for additional details on current consumption and sensitivity.
(3) For 868 or 915 MHz, see Figure 5-22 for current consumption with register settings optimized for sensitivity.

Copyright © 2012–2018, Texas Instruments Incorporated

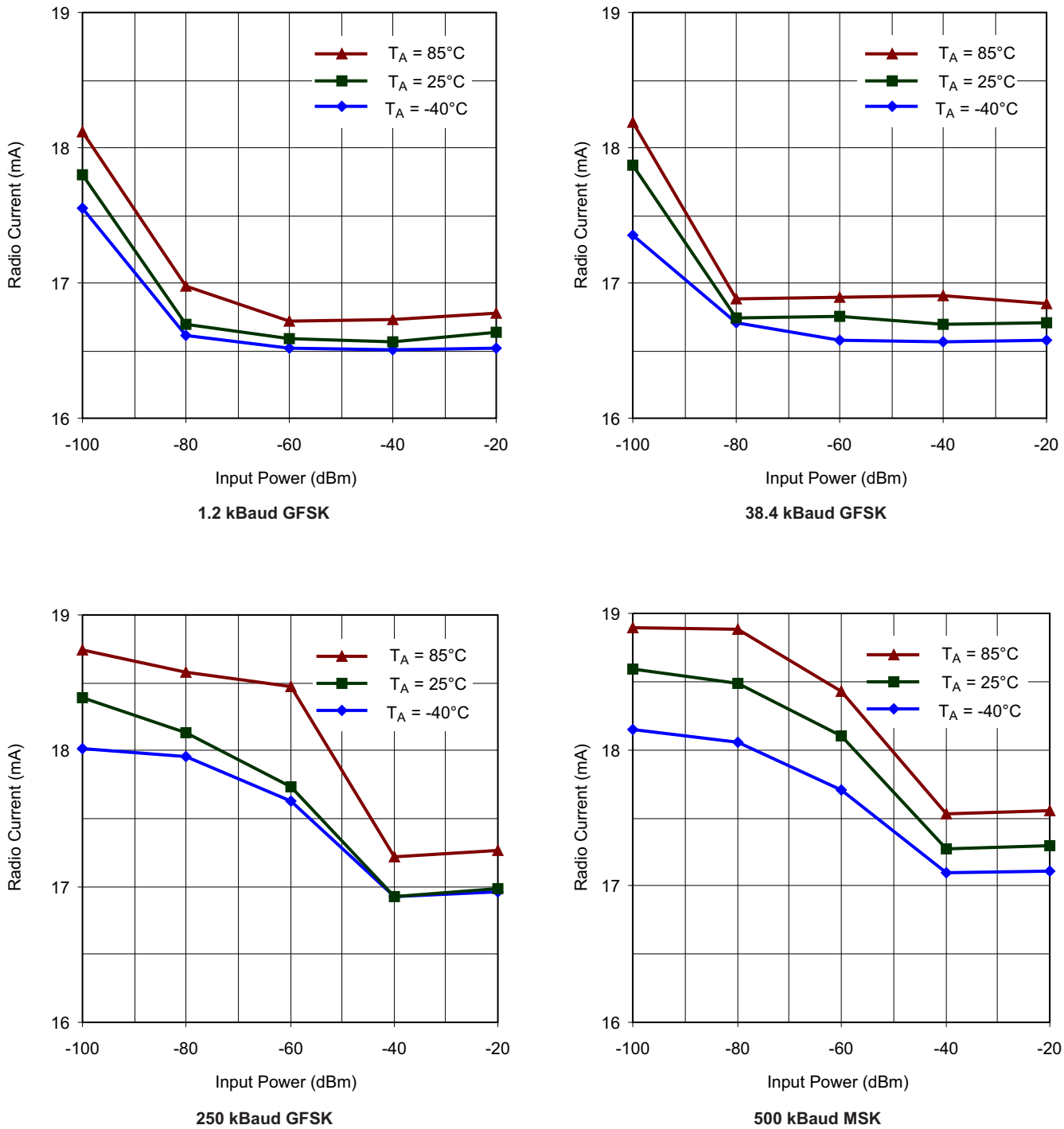

Figure 5-22. Typical RX Current Consumption Over Temperature and Input Power Level, 868 MHz, Sensitivity-Optimized Setting

5.48 Current Consumption, Transmit Mode

T_A = 25°C, V_{CC} = 3 V (unless otherwise noted)(1) (2)

PARAMETER	FREQUENCY (MHz)	PATABLE SETTING	OUTPUT POWER (dBm)	MIN	TYP	MAX	UNIT
Current consumption, TX	315	0xC0	maximum		26		mA
		0xC4	+10		25		
		0x51	0		15		
		0x29	–6		15		
	433	0xC0	maximum		33		
		0xC6	+10		29		
		0x50	0		17		
		0x2D	–6		17		
	868	0xC0	maximum		36		
		0xC3	+10		33		
		0x8D	0		18		
		0x2D	–6		18		
	915	0xC0	maximum		35		
		0xC3	+10		32		
		0x8D	0		18		
		0x2D	–6		18		

(1) All measurement results are obtained using the EM430F6137RF900 with BOM according to tested frequency range (see Table 7-1).
(2) Reduced current setting (MDMCFG2.DEM_DCFILT_OFF = 1) gives a slightly lower current consumption at the cost of a reduction in sensitivity. See Section 5.53 through Section 5.56 for additional details on current consumption and sensitivity.

Copyright © 2012–2018, Texas Instruments Incorporated

5.49 Typical TX Current Consumption, 315 MHz, 25°C

PARAMETER	PATABLE SETTING	OUTPUT POWER (dBm)	V_{CC}	2 V	3 V	3.6 V	UNIT
			T_A	25°C	25°C	25°C	
Current consumption, TX	0xC0	maximum		27.5	26.4	28.1	mA
	0xC4	+10		25.1	25.2	25.3	
	0x51	0		14.4	14.6	14.7	
	0x29	–6		14.2	14.7	15.0	

5.50 Typical TX Current Consumption, 433 MHz, 25°C

PARAMETER	PATABLE SETTING	OUTPUT POWER (dBm)	V_{CC}	2 V	3 V	3.6 V	UNIT
			T_A	25°C	25°C	25°C	
Current consumption, TX	0xC0	maximum		33.1	33.4	33.8	mA
	0xC6	+10		28.6	28.8	28.8	
	0x50	0		16.6	16.8	16.9	
	0x2D	–6		16.8	17.5	17.8	

5.51 Typical TX Current Consumption, 868 MHz

PARAMETER	PATABLE SETTING	OUTPUT POWER (dBm)	V_{CC}	2 V			3 V			3.6 V			UNIT
			T_A	–40°C	25°C	85°C	–40°C	25°C	85°C	–40°C	25°C	85°C	
Current consumption, TX	0xC0	maximum		36.7	35.2	34.2	38.5	35.5	34.9	37.1	35.7	34.7	mA
	0xC3	+10		34.0	32.8	32.0	34.2	33.0	32.5	34.3	33.1	32.2	
	0x8D	0		18.0	17.6	17.5	18.3	17.8	18.1	18.4	18.0	17.7	
	0x2D	–6		17.1	17.0	17.2	17.8	17.8	18.3	18.2	18.1	18.1	

5.52 Typical TX Current Consumption, 915 MHz

PARAMETER	PATABLE SETTING	OUTPUT POWER (dBm)	V_{CC}	2 V			3 V			3.6 V			UNIT
			T_A	–40°C	25°C	85°C	–40°C	25°C	85°C	–40°C	25°C	85°C	
Current consumption, TX	0xC0	maximum		35.5	33.8	33.2	36.2	34.8	33.6	36.3	35.0	33.8	mA
	0xC3	+10		33.2	32.0	31.0	33.4	32.1	31.2	33.5	32.3	31.3	
	0x8D	0		17.8	17.4	17.1	18.1	17.6	17.3	18.2	17.8	17.5	
	0x2D	–6		17.0	16.9	16.9	17.7	17.6	17.6	18.1	18.0	18.0	

5.53 RF Receive, Overall

T_A = 25°C, V_{CC} = 3 V (unless otherwise noted)(1)

PARAMETER	TEST CONDITIONS	MIN	TYP	MAX	UNIT
Digital channel filter bandwidth(2)		58		812	kHz
Spurious emissions(3) (4)	25 MHz to 1 GHz		–68	–57	dBm
	Above 1 GHz		–66	–47	
RX latency	Serial operation(5)		9		bit

(1) All measurement results are obtained using the EM430F6137RF900 with BOM according to tested frequency range (see Table 7-1).
(2) User programmable. The bandwidth limits are proportional to crystal frequency (given values assume a 26.0 MHz crystal)
(3) Typical radiated spurious emission is –49 dBm measured at the VCO frequency
(4) Maximum figure is the ETSI EN 300 220 limit
(5) Time from start of reception until data is available on the receiver data output pin is equal to 9 bit.

5.54 RF Receive, 315 MHz

T_A = 25°C, V_{CC} = 3 V (unless otherwise noted)(1)
2-FSK, 1% packet error rate, 20-byte packet length, Sensitivity optimized, MDMCFG2.DEM_DCFILT_OFF = 0 (unless otherwise noted)

PARAMETER	DATA RATE (kBaud)	TEST CONDITIONS	MIN	TYP	MAX	UNIT
Receiver sensitivity	0.6	14.3-kHz deviation, 58-kHz digital channel filter bandwidth		–117		dBm
	1.2	5.2-kHz deviation, 58-kHz digital channel filter bandwidth(2)		–111		
	38.4	20-kHz deviation, 100-kHz digital channel filter bandwidth(3)		–103		
	250	127-kHz deviation, 540-kHz digital channel filter bandwidth (4)		–95		
	500	MSK, 812-kHz digital channel filter bandwidth(4)		–86		

(1) All measurement results are obtained using the EM430F6137RF900 with BOM according to tested frequency range (see Table 7-1).
(2) Sensitivity can be traded for current consumption by setting MDMCFG2.DEM_DCFILT_OFF = 1. The typical current consumption is then reduced by approximately 2 mA close to the sensitivity limit. The sensitivity is typically reduced to –109 dBm.
(3) Sensitivity can be traded for current consumption by setting MDMCFG2.DEM_DCFILT_OFF = 1. The typical current consumption is then reduced by approximately 2 mA close to the sensitivity limit. The sensitivity is typically reduced to –102 dBm.
(4) MDMCFG2.DEM_DCFILT_OFF = 1 cannot be used for data rates ≥ 250kBaud.

5.55 RF Receive, 433 MHz

T_A = 25°C, V_{CC} = 3 V (unless otherwise noted)(1)
2-FSK, 1% packet error rate, 20-byte packet length, Sensitivity optimized, MDMCFG2.DEM_DCFILT_OFF = 0 (unless otherwise noted)

PARAMETER	DATA RATE (kBaud)	TEST CONDITIONS	MIN	TYP	MAX	UNIT
Receiver sensitivity	0.6	14.3-kHz deviation, 58-kHz digital channel filter bandwidth		–114		dBm
	1.2	5.2-kHz deviation, 58-kHz digital channel filter bandwidth(2)		–111		
	38.4	20-kHz deviation, 100-kHz digital channel filter bandwidth(3)		–104		
	250	127-kHz deviation, 540-kHz digital channel filter bandwidth (4)		–93		
	500	MSK, 812-kHz digital channel filter bandwidth(4)		–85		

(1) All measurement results are obtained using the EM430F6137RF900 with BOM according to tested frequency range (see Table 7-1).
(2) Sensitivity can be traded for current consumption by setting MDMCFG2.DEM_DCFILT_OFF = 1. The typical current consumption is then reduced by approximately 2 mA close to the sensitivity limit. The sensitivity is typically reduced to –109 dBm.
(3) Sensitivity can be traded for current consumption by setting MDMCFG2.DEM_DCFILT_OFF = 1. The typical current consumption is then reduced by approximately 2 mA close to the sensitivity limit. The sensitivity is typically reduced to –101 dBm.
(4) MDMCFG2.DEM_DCFILT_OFF = 1 cannot be used for data rates ≥ 250kBaud.

Copyright © 2012–2018, Texas Instruments Incorporated

5.56 RF Receive, 868 MHz and 915 MHz

T_A = 25°C, V_{CC} = 3 V (unless otherwise noted)(1)
1% packet error rate, 20-byte packet length, Sensitivity optimized, MDMCFG2.DEM_DCFILT_OFF = 0 (unless otherwise noted)

PARAMETER	TEST CONDITIONS		MIN	TYP	MAX	UNIT
0.6-kBaud data rate, 2-FSK, 14.3-kHz deviation, 58-kHz digital channel filter bandwidth (unless otherwise noted)						
Receiver sensitivity				–115		dBm
1.2-kBaud data rate, 2-FSK, 5.2-kHz deviation, 58-kHz digital channel filter bandwidth (unless otherwise noted)						
Receiver sensitivity(2)				–109		dBm
	2-GFSK modulation by setting MDMCFG2.MOD_FORMAT=2, Gaussian filter with BT = 0.5			–109		
Saturation	FIFOTHR.CLOSE_IN_RX = 0(3)			–28		dBm
Adjacent channel rejection	Desired channel 3 dB above the sensitivity limit, 100-kHz channel spacing(4)	–100-kHz offset		39		dB
		+100-kHz offset		39		
Image channel rejection	IF 152 kHz, desired channel 3 dB above the sensitivity limit			29		dB
Blocking	Desired channel 3 dB above the sensitivity limit(5)	±2-MHz offset		–48		dBm
		±10-MHz offset		–40		
38.4-kBaud data rate, 2-FSK, 20-kHz deviation, 100-kHz digital channel filter bandwidth (unless otherwise noted)						
Receiver sensitivity(6)				–102		dBm
	2-GFSK modulation by setting MDMCFG2.MOD_FORMAT = 2, Gaussian filter with BT = 0.5			–101		
Saturation	FIFOTHR.CLOSE_IN_RX = 0(3)			–19		dBm
Adjacent channel rejection	Desired channel 3 dB above the sensitivity limit, 200-kHz channel spacing(5)	–200-kHz offset		20		dB
		+200-kHz offset		25		
Image channel rejection	IF 152 kHz, desired channel 3 dB above the sensitivity limit			23		dB
Blocking	Desired channel 3 dB above the sensitivity limit(5)	±2-MHz offset		–48		dBm
		±10-MHz offset		–40		
250-kBaud data rate, 2-FSK, 127-kHz deviation, 540-kHz digital channel filter bandwidth (unless otherwise noted)						
Receiver sensitivity (7)				–90		dBm
	2-GFSK modulation by setting MDMCFG2.MOD_FORMAT = 2, Gaussian filter with BT = 0.5			–90		
Saturation	FIFOTHR.CLOSE_IN_RX = 0(3)			–19		dBm
Adjacent channel rejection	Desired channel 3 dB above the sensitivity limit, 750-kHz channel spacing(8)	–750-kHz offset		24		dB
		+750-kHz offset		30		
Image channel rejection	IF 304 kHz, desired channel 3 dB above the sensitivity limit			18		dB
Blocking	Desired channel 3 dB above the sensitivity limit(8)	±2-MHz offset		–53		dBm
		±10-MHz offset		–39		
500-kBaud data rate, MSK, 812-kHz digital channel filter bandwidth (unless otherwise noted)						
Receiver sensitivity(7)				–84		dBm
Image channel rejection	IF 355 kHz, desired channel 3 dB above the sensitivity limit			–2		dB
Blocking	Desired channel 3 dB above the sensitivity limit(9)	±2-MHz offset		–53		dBm
		±10-MHz offset		–38		

(1) All measurement results are obtained using the EM430F6137RF900 with BOM according to tested frequency range (see Table 7-1).
(2) Sensitivity can be traded for current consumption by setting MDMCFG2.DEM_DCFILT_OFF = 1. The typical current consumption is then reduced by approximately 2 mA close to the sensitivity limit. The sensitivity is typically reduced to –107 dBm
(3) See *DN010 Close-in Reception with CC1101*.
(4) See Figure 5-23 for blocking performance at other offset frequencies.
(5) See Figure 5-24 for blocking performance at other offset frequencies.
(6) Sensitivity can be traded for current consumption by setting MDMCFG2.DEM_DCFILT_OFF = 1. The typical current consumption is then reduced by approximately 2 mA close to the sensitivity limit. The sensitivity is typically reduced to –100dBm.
(7) MDMCFG2.DEM_DCFILT_OFF = 1 cannot be used for data rates ≥ 250 kBaud.
(8) See Figure 5-25 for blocking performance at other offset frequencies.
(9) See Figure 5-26 for blocking performance at other offset frequencies.

Copyright © 2012–2018, Texas Instruments Incorporated

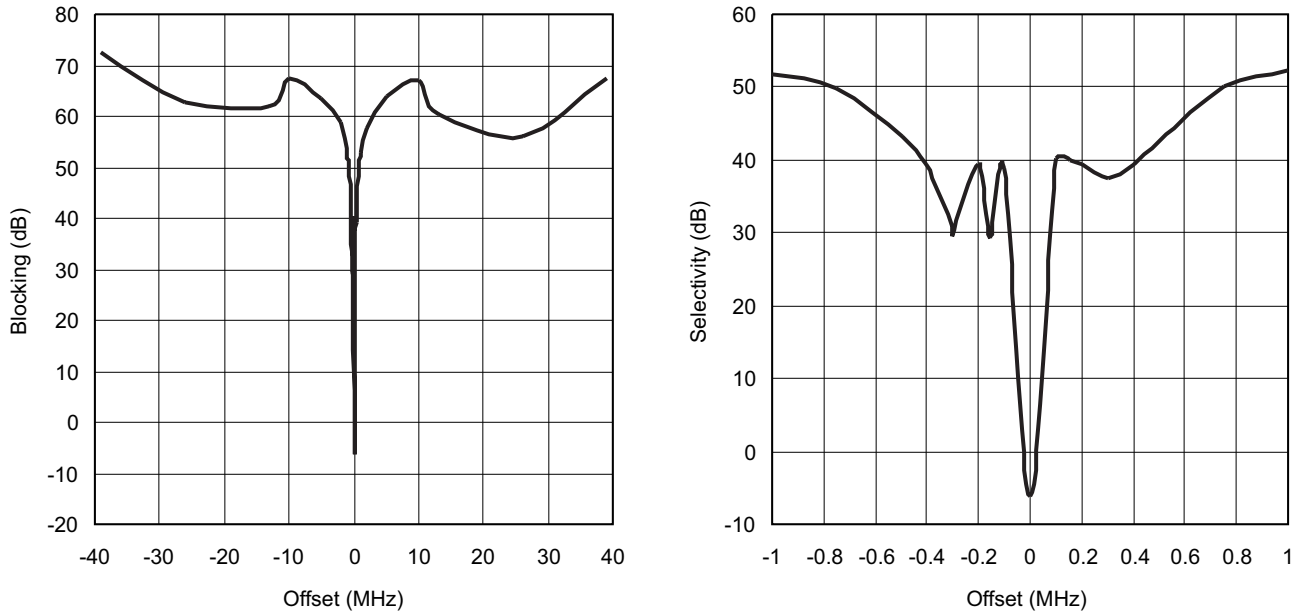

NOTE: 868.3 MHz, 2-FSK, 5.2-kHz deviation, IF is 152.3 kHz, digital channel filter bandwidth is 58 kHz

Figure 5-23. Typical Selectivity at 1.2-kBaud Data Rate

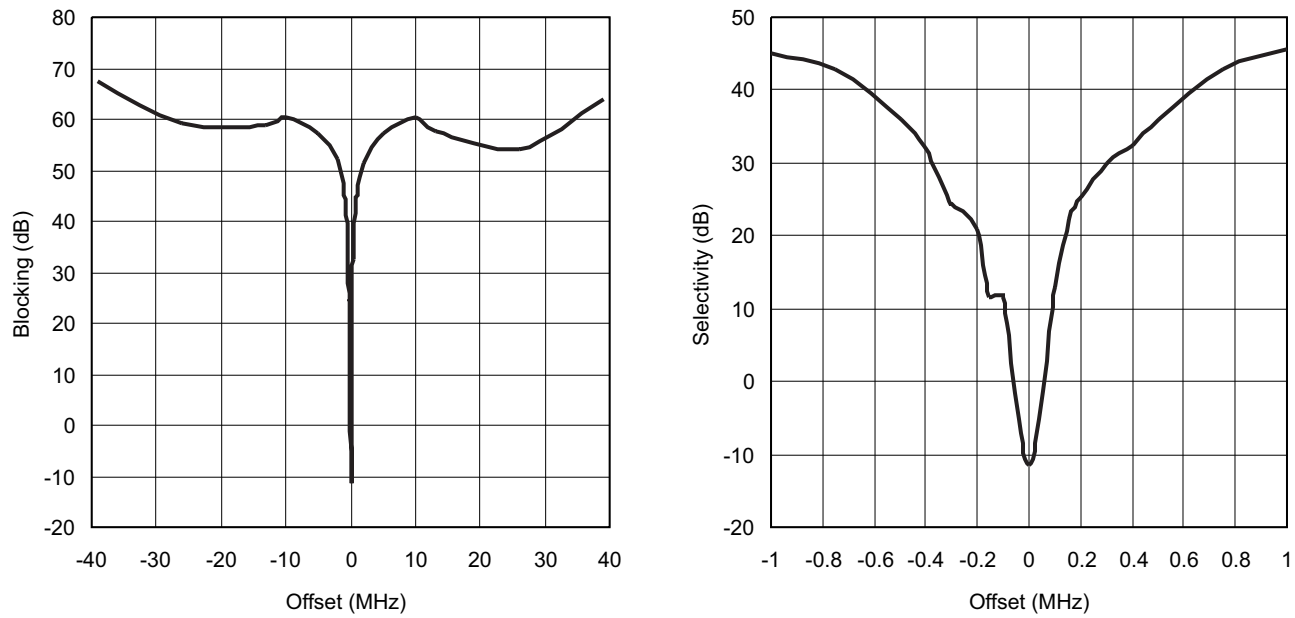

NOTE: 868 MHz, 2-FSK, 20 kHz deviation, IF is 152.3 kHz, digital channel filter bandwidth is 100 kHz

Figure 5-24. Typical Selectivity at 38.4-kBaud Data Rate

Copyright © 2012–2018, Texas Instruments Incorporated

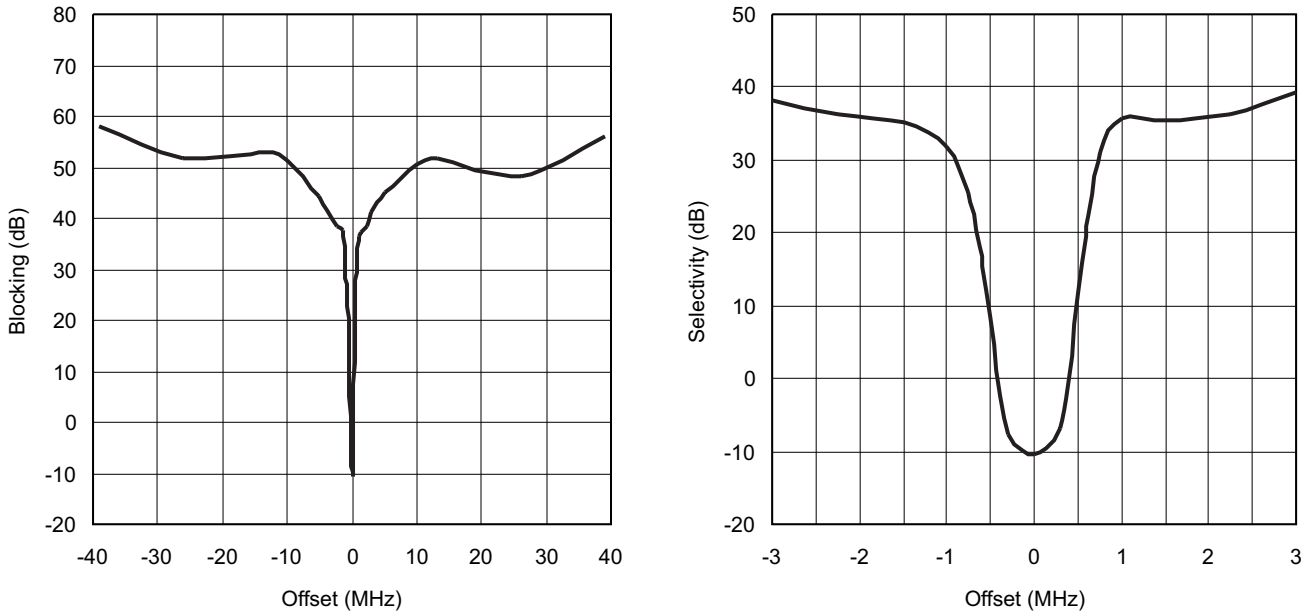

NOTE: 868 MHz, 2-FSK, IF is 304 kHz, digital channel filter bandwidth is 540 kHz

Figure 5-25. Typical Selectivity at 250-kBaud Data Rate

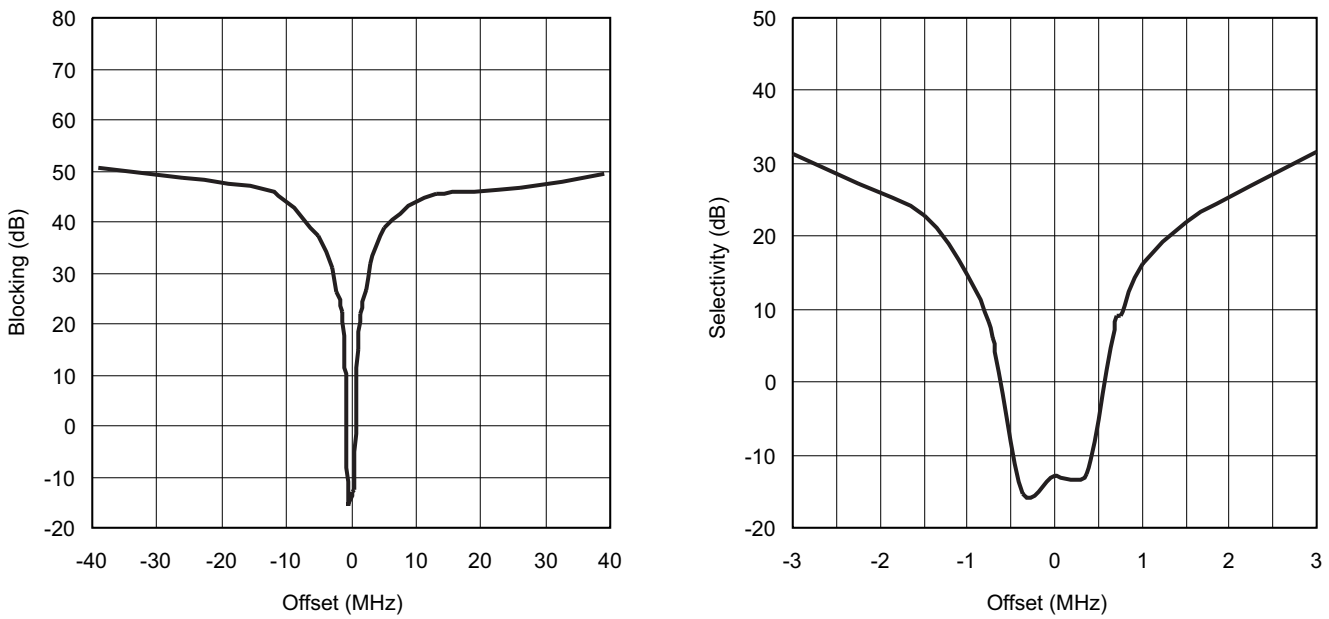

NOTE: 868 MHz, 2-FSK, IF is 355 kHz, digital channel filter bandwidth is 812 kHz

Figure 5-26. Typical Selectivity at 500-kBaud Data Rate

5.57 Typical Sensitivity, 315 MHz, Sensitivity Optimized Setting

PARAMETER	DATA RATE (kBaud)	V_{CC}	2 V			3 V			3.6 V			UNIT
		T_A	–40°C	25°C	85°C	–40°C	25°C	85°C	–40°C	25°C	85°C	
Sensitivity, 315 MHz	1.2		–112	–112	–110	–112	–111	–109	–112	–111	–108	dBm
	38.4		–105	–105	–104	–105	–103	–102	–105	–104	–102	
	250		–95	–95	–92	–94	–95	–92	–95	–94	–91	

5.58 Typical Sensitivity, 433 MHz, Sensitivity Optimized Setting

PARAMETER	DATA RATE (kBaud)	V_{CC}	2 V			3 V			3.6 V			UNIT
		T_A	–40°C	25°C	85°C	–40°C	25°C	85°C	–40°C	25°C	85°C	
Sensitivity, 433 MHz	1.2		–111	–110	–108	–111	–111	–108	–111	–110	–107	dBm
	38.4		–104	–104	–101	–104	–104	–101	–104	–103	–101	
	250		–93	–94	–91	–93	–93	–90	–93	–93	–90	

5.59 Typical Sensitivity, 868 MHz, Sensitivity Optimized Setting

PARAMETER	DATA RATE (kBaud)	V_{CC}	2 V			3 V			3.6 V			UNIT
		T_A	–40°C	25°C	85°C	–40°C	25°C	85°C	–40°C	25°C	85°C	
Sensitivity, 868 MHz	1.2		–109	–109	–107	–109	–109	–106	–109	–108	–106	dBm
	38.4		–102	–102	–100	–102	–102	–99	–102	–101	–99	
	250		–90	–90	–88	–89	–90	–87	–89	–90	–87	
	500		–84	–84	–81	–84	–84	–80	–84	–84	–80	

5.60 Typical Sensitivity, 915 MHz, Sensitivity Optimized Setting

PARAMETER	DATA RATE (kBaud)	V_{CC}	2 V			3 V			3.6 V			UNIT
		T_A	–40°C	25°C	85°C	–40°C	25°C	85°C	–40°C	25°C	85°C	
Sensitivity, 915 MHz	1.2		–109	–109	–107	–109	–109	–106	–109	–108	–105	dBm
	38.4		–102	–102	–100	–102	–102	–99	–103	–102	–99	
	250		–92	–92	–89	–92	–92	–88	–92	–92	–88	
	500		–87	–86	–81	–86	–86	–81	–86	–85	–80	

Copyright © 2012–2018, Texas Instruments Incorporated

5.61 RF Transmit

T_A = 25°C, V_{CC} = 3 V (unless otherwise noted)[1], P_{TX} = +10 dBm (unless otherwise noted)

PARAMETER	FREQ (MHz)	TEST CONDITIONS		MIN	TYP	MAX	UNIT
Differential load impedance[2]	315				122 + j31		Ω
	433				116 + j41		
	868, 915				86.5 + j43		
Output power, highest setting[3]	315	Delivered to a 50-Ω single-ended load through the RF matching network of the CC430 reference design			+12		dBm
	433				+13		
	868				+11		
	915				+11		
Output power, lowest setting[3]		Delivered to a 50-Ω single-ended load through the RF matching network of the CC430 reference design			–30		dBm
Harmonics, radiated[4][5][6]	433	Second harmonic			–56		dBm
		Third harmonic			–57		
	868	Second harmonic			–50		
		Third harmonic			–52		
	915	Second harmonic			–50		
		Third harmonic			–54		
Harmonics, conducted	315	Frequencies below 960 MHz	+10 dBm CW		< –38		dBm
		Frequencies above 960 MHz			< –48		
	433	Frequencies below 1 GHz	+10 dBm CW		–45		
		Frequencies above 1 GHz			< –48		
	868	Second harmonic	+10 dBm CW		–59		
		Other harmonics			< –71		
	915	Second harmonic	+11 dBm CW[7]		–53		
		Other harmonics			< –47		
Spurious emissions, conducted, harmonics not included[8]	315	Frequencies below 960 MHz	+10 dBm CW		< –58		dBm
		Frequencies above 960 MHz			< –53		
	433	Frequencies below 1 GHz	+10 dBm CW		< –54		
		Frequencies above 1 GHz			< –54		
		Frequencies from 47 to 74, 87.5 to 118, 174 to 230, 470 to 862 MHz			< –63		
	868	Frequencies below 1 GHz	+10 dBm CW		< –46		
		Frequencies above 1 GHz			< –59		
		Frequencies from 47 to 74, 87.5 to 118, 174 to 230, 470 to 862 MHz			< –56		
	915	Frequencies below 960 MHz	+11 dBm CW		< –49		
		Frequencies above 960 MHz			< –63		
TX latency[9]		Serial operation			8		bits

(1) All measurement results are obtained using the EM430F6137RF900 with BOM according to tested frequency range (see Table 7-1).
(2) Differential impedance as seen from the RF-port (RF_P and RF_N) towards the antenna. Follow the CC430 reference designs available from the TI website.
(3) Output power is programmable, and full range is available in all frequency bands. Output power may be restricted by regulatory limits. See also *AN050 Using the CC1101 in the European 868 MHz SRD Band* and *DN013 Programming Output Power on CC1101*, which gives the output power and harmonics when using multilayer inductors. The output power is then typically +10 dBm when operating at 868 or 915 MHz.
(4) The antennas used during the radiated measurements (SMAFF-433 from R.W.Badland and Nearson S331 868 or 915) play a part in attenuating the harmonics.
(5) Measured on EM430F6137RF900 with CW, maximum output power
(6) All harmonics are below –41.2 dBm when operating in the 902- to 928-MHz band.
(7) Requirement is –20 dBc under FCC 15.247
(8) All radiated spurious emissions are within the limits of ETSI. Also see *DN017 CC11xx 868/915 MHz RF Matching*.
(9) Time from sampling the data on the transmitter data input pin until it is observed on the RF output ports

Copyright © 2012–2018, Texas Instruments Incorporated

5.62 Optimum PATABLE Settings for Various Output Power Levels and Frequency Bands

T_A = 25°C, V_{CC} = 3 V (unless otherwise noted)[1]

OUTPUT POWER (dBm)	PATABLE SETTING			
	315 MHz	433 MHz	868 MHz	915 MHz
–30	0x12	0x05	0x03	0x03
–12	0x33	0x26	0x25	0x25
–6	0x29	0x2D	0x2D	0x2D
0	0x51	0x50	0x8D	0x8D
10	0xC4	0xC4	0xC3	0xC3
maximum	0xC0	0xC0	0xC0	0xC0

(1) All measurement results are obtained using the EM430F6137RF900 with BOM according to tested frequency range (see Table 7-1).

Copyright © 2012–2018, Texas Instruments Incorporated

5.63 Typical Output Power, 315 MHz(1)

PARAMETER	PATABLE SETTING	V_{CC}	2 V	3 V	3.6 V	UNIT
		T_A	25°C	25°C	25°C	
Output power, 315 MHz	0xC0 (maximum)		11.9	11.8	11.8	dBm
	0xC4 (10 dBm)		10.3	10.3	10.3	
	0xC6 (default)			9.3		
	0x51 (0 dBm)		0.7	0.6	0.7	
	0x29 (–6 dBm)		–6.8	–5.6	–5.3	

(1) All measurement results are obtained using the EM430F6137RF900 with BOM according to tested frequency range (see Table 7-1).

5.64 Typical Output Power, 433 MHz(1)

PARAMETER	PATABLE SETTING	V_{CC}	2 V	3 V	3.6 V	UNIT
		T_A	25°C	25°C	25°C	
Output power, 433 MHz	0xC0 (maximum)		12.6	12.6	12.6	dBm
	0xC4 (10 dBm)		10.3	10.2	10.2	
	0xC6 (default)			10.0		
	0x50 (0 dBm)		0.3	0.3	0.3	
	0x2D (–6 dBm)		–6.4	–5.4	–5.1	

(1) All measurement results are obtained using the EM430F6137RF900 with BOM according to tested frequency range (see Table 7-1).

5.65 Typical Output Power, 868 MHz(1)

PARAMETER	PATABLE SETTING	V_{CC}	2 V			3 V			3.6 V			UNIT
		T_A	–40°C	25°C	85°C	–40°C	25°C	85°C	–40°C	25°C	85°C	
Output power, 868 MHz	0xC0 (maximum)		11.9	11.2	10.5	11.9	11.2	10.5	11.9	11.2	10.5	dBm
	0xC3 (10 Bm)		10.8	10.1	9.4	10.8	10.1	9.4	10.7	10.1	9.4	
	0xC6 (default)						8.8					
	0x8D (0 dBm)		1.0	0.3	–0.3	1.1	0.3	–0.3	1.1	0.3	–0.3	
	0x2D (–6 dBm)		–6.5	–6.8	–7.3	–5.3	–5.8	–6.3	–4.9	–5.4	–6.0	

(1) All measurement results are obtained using the EM430F6137RF900 with BOM according to tested frequency range (see Table 7-1).

5.66 Typical Output Power, 915 MHz(1)

PARAMETER	PATABLE SETTING	V_{CC}	2 V			3 V			3.6 V			UNIT
		T_A	–40°C	25°C	85°C	–40°C	25°C	85°C	–40°C	25°C	85°C	
Output power, 915 MHz	0xC0 (maximum)		12.2	11.4	10.6	12.1	11.4	10.7	12.1	11.4	10.7	dBm
	0xC3 (10 dBm)		11.0	10.3	9.5	11.0	10.3	9.5	11.0	10.3	9.6	
	0xC6 (default)						8.8					
	0x8D (0 dBm)		1.9	1.0	0.3	1.9	1.0	0.3	1.9	1.1	0.3	
	0x2D (–6 dBm)		–5.5	–6.0	–6.5	–4.3	–4.8	–5.5	–3.9	–4.4	–5.1	

(1) All measurement results are obtained using the EM430F6137RF900 with BOM according to tested frequency range (see Table 7-1).

5.67 Frequency Synthesizer Characteristics

T_A = 25°C, V_{CC} = 3 V (unless otherwise noted)(1)
MIN figures are given using a 27-MHz crystal. TYP and MAX figures are given using a 26-MHz crystal.

PARAMETER	TEST CONDITIONS	MIN	TYP	MAX	UNIT
Programmed frequency resolution(2)	26- to 27-MHz crystal	397	f_{XOSC} / 2^{16}	412	Hz
Synthesizer frequency tolerance(3)			±40		ppm
RF carrier phase noise	50-kHz offset from carrier		–95		dBc/Hz
	100-kHz offset from carrier		–94		
	200-kHz offset from carrier		–94		
	500-kHz offset from carrier		–98		
	1-MHz offset from carrier		–107		
	2-MHz offset from carrier		–112		
	5-MHz offset from carrier		–118		
	10-MHz offset from carrier		–129		
PLL turnon and hop time(4)	Crystal oscillator running	85.1		88.4	µs
PLL RX to TX settling time(5)		9.3		9.6	µs
PLL TX to RX settling time(6)		20.7		21.5	µs
PLL calibration time(7)		694		721	µs

(1) All measurement results are obtained using the EM430F6137RF900 with BOM according to tested frequency range (see Table 7-1).
(2) The resolution (in Hz) is equal for all frequency bands.
(3) Depends on crystal used. Required accuracy (including temperature and aging) depends on frequency band and channel bandwidth / spacing.
(4) Time from leaving the IDLE state until arriving in the RX, FSTXON, or TX state when not performing calibration.
(5) Settling time for the 1-IF step from RX to TX
(6) Settling time for the 1-IF step from TX to RX
(7) Calibration can be initiated manually or automatically before entering or after leaving RX/TX

Copyright © 2012–2018, Texas Instruments Incorporated

5.68 Typical RSSI_offset Values

T_A = 25°C, V_{CC} = 3 V (unless otherwise noted)(1)

DATA RATE (kBaud)	RSSI_OFFSET (dB)	
	433 MHz	868 MHz
1.2	74	74
38.4	74	74
250	74	74
500	74	74

(1) All measurement results are obtained using the EM430F6137RF900 with BOM according to tested frequency range (see Table 7-1).

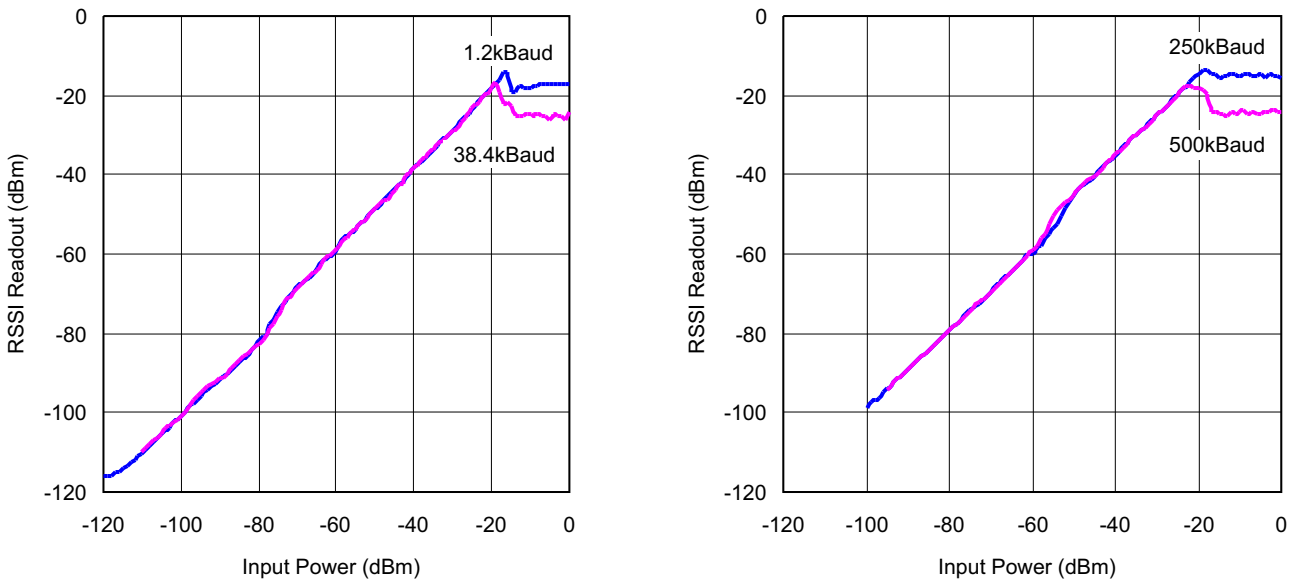

Figure 5-27. Typical RSSI Value vs Input Power Level for Different Data Rates at 868 MHz

6 Detailed Description

6.1 Sub-1 GHz Radio

The implemented sub-1 GHz radio module is based on the industry-leading CC1101, requiring very few external components. Figure 6-1 shows a high-level block diagram of the implemented radio.

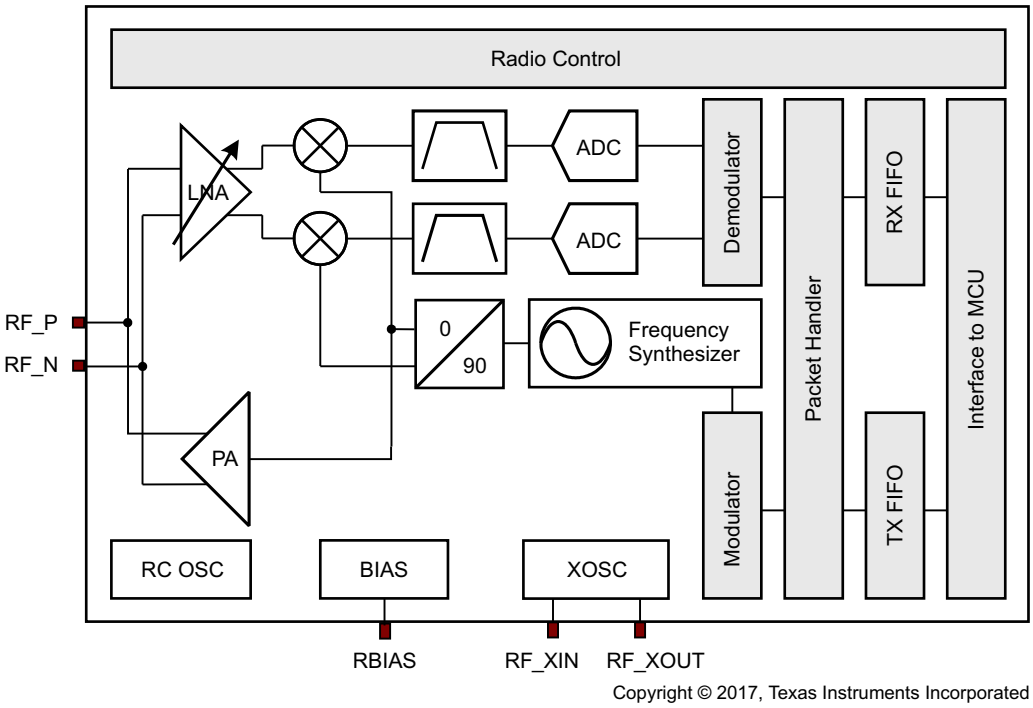

Figure 6-1. Sub-1 GHz Radio Block Diagram

The radio features a low-IF receiver. The received RF signal is amplified by a low-noise amplifier (LNA) and down-converted in quadrature to the intermediate frequency (IF). At IF, the I/Q signals are digitized. Automatic gain control (AGC), fine channel filtering, demodulation bit, and packet synchronization are performed digitally.

The transmitter part is based on direct synthesis of the RF. The frequency synthesizer includes a completely on-chip LC VCO and a 90° phase shifter for generating the I and Q LO signals to the down-conversion mixers in receive mode.

The 26-MHz crystal oscillator generates the reference frequency for the synthesizer, as well as clocks for the ADC and the digital part.

A memory mapped register interface is used for data access, configuration, and status request by the CPU.

The digital baseband includes support for channel configuration, packet handling, and data buffering.

For complete module descriptions, see the *CC430 Family User's Guide*.

Copyright © 2012–2018, Texas Instruments Incorporated

6.2 CPU

The MSP430 CPU has a 16-bit RISC architecture that is highly transparent to the application. All operations, other than program-flow instructions, are performed as register operations in conjunction with seven addressing modes for source operand and four addressing modes for destination operand.

The CPU is integrated with 16 registers that provide reduced instruction execution time. The register-to-register operation execution time is one cycle of the CPU clock.

Four of the registers, R0 to R3, are dedicated as program counter, stack pointer, status register, and constant generator, respectively. The remaining registers are general-purpose registers.

Peripherals are connected to the CPU using data, address, and control buses. The peripherals can be managed with all instructions.

The instruction set consists of the original 51 instructions with three formats and seven address modes and additional instructions for the expanded address range. Each instruction can operate on word and byte data.

6.3 Operating Modes

The CC430 has one active mode and seven software-selectable low-power modes of operation. An interrupt event can wake up the device from any of the low-power modes, service the request, and restore back to the low-power mode on return from the interrupt program.

Software can configure the following operating modes:

- Active mode (AM)
  - All clocks are active
- Low-power mode 0 (LPM0)
  - CPU is disabled
  - ACLK and SMCLK remain active, MCLK is disabled
  - FLL loop control remains active
- Low-power mode 1 (LPM1)
  - CPU is disabled
  - FLL loop control is disabled
  - ACLK and SMCLK remain active, MCLK is disabled
- Low-power mode 2 (LPM2)
  - CPU is disabled
  - MCLK and FLL loop control and DCOCLK are disabled
  - DC generator of the DCO remains enabled
  - ACLK remains active
- Low-power mode 3 (LPM3)
  - CPU is disabled
  - MCLK, FLL loop control, and DCOCLK are disabled
  - DC generator of the DCO is disabled
  - ACLK remains active
- Low-power mode 4 (LPM4)
  - CPU is disabled
  - ACLK is disabled
  - MCLK, FLL loop control, and DCOCLK are disabled
  - DC generator of the DCO is disabled
  - Crystal oscillator is stopped
  - Complete data retention
- Low-power mode 3.5 (LPM3.5)
  - Internal regulator disabled
  - No data retention except Backup RAM and RTC
  - RTC enabled and clocked by low-frequency crystal oscillator XT1
  - Wake-up input from $\overline{\text{RST}}$/NMI, RTC, P1, P2
- Low-power mode 4.5 (LPM4.5)
  - Internal regulator disabled
  - No data retention except Backup RAM
  - Wake-up input from $\overline{\text{RST}}$/NMI, P1, P2

6.4 Interrupt Vector Addresses

The interrupt vectors and the power-up start address are in the address range 0FFFFh–0FF80h (see Table 6-1). The vector contains the 16-bit address of the appropriate interrupt-handler instruction sequence.

Table 6-1. Interrupt Sources, Flags, and Vectors

INTERRUPT SOURCE	INTERRUPT FLAG	SYSTEM INTERRUPT	WORD ADDRESS	PRIORITY
System Reset Power-Up External Reset Watchdog Time-out, Password Violation Flash Memory Password Violation	WDTIFG, KEYV (SYSRSTIV)(1)(2)	Reset	0FFFEh	63, highest
System NMI PMM Vacant Memory Access JTAG Mailbox	SVMLIFG, SVMHIFG, DLYLIFG, DLYHIFG, VLRLIFG, VLRHIFG, VMAIFG, JMBNIFG, JMBOUTIFG (SYSSNIV)(1)(3)	(Non)maskable	0FFFCh	62
User NMI NMI Oscillator Fault Flash Memory Access Violation	NMIIFG, OFIFG, ACCVIFG (SYSUNIV)(1)(3)	(Non)maskable	0FFFAh	61
Comparator_B	Comparator_B Interrupt Flags (CBIV)(1)	Maskable	0FFF8h	60
Watchdog Interval Timer Mode	WDTIFG	Maskable	0FFF6h	59
USCI_A0 Receive or Transmit	UCA0RXIFG, UCA0TXIFG (UCA0IV)(1)	Maskable	0FFF4h	58
USCI_B0 Receive or Transmit	UCB0RXIFG, UCB0TXIFG, I^2C Status Interrupt Flags (UCB0IV)(1)	Maskable	0FFF2h	57
ADC10_A (Reserved on CC430F512x)	ADC10IFG0, ADC10INIFG, ADC10LOIFG, ADC10HIIFG, ADC10TOVIFG, ADC10OVIFG (ADC10IV)(1)	Maskable	0FFF0h	56
TA0	TA0CCR0 CCIFG0	Maskable	0FFEEh	55
TA0	TA0CCR1 CCIFG1 ... TA0CCR4 CCIFG4, TA0IFG (TA0IV)(1)	Maskable	0FFECh	54
RF1A CC1101-based Radio	Radio Interface Interrupt Flags (RF1AIFIV) Radio Core Interrupt Flags (RF1AIV)	Maskable	0FFEAh	53
DMA	DMA0IFG, DMA1IFG, DMA2IFG (DMAIV)(1)	Maskable	0FFE8h	52
TA1	TA1CCR0 CCIFG0	Maskable	0FFE6h	51
TA1	TA1CCR1 CCIFG1 ... TA1CCR2 CCIFG2, TA1IFG (TA1IV)(1)	Maskable	0FFE4h	50
I/O Port P1	P1IFG.0 to P1IFG.7 (P1IV)(1)	Maskable	0FFE2h	49
I/O Port P2	P2IFG.0 to P2IFG.7 (P2IV)(1)	Maskable	0FFE0h	48
LCD_B (Reserved on CC430F514x and CC430F512x)	LCD_B Interrupt Flags (LCDBIV)(1)	Maskable	0FFDEh	47
RTC_D	RTCRDYIFG, RTCTEVIFG, RTCAIFG, RT0PSIFG, RT1PSIFG, RTCOFIFG (RTCIV)(1)	Maskable	0FFDCh	46
AES	AESRDYIFG	Maskable	0FFDAh	45
Reserved	Reserved(4)		0FFD8h	44
			⋮	⋮
			0FF80h	0, lowest

(1) Multiple source flags
(2) A reset is generated if the CPU tries to fetch instructions from within peripheral space.
(3) (Non)maskable: the individual interrupt enable bit can disable an interrupt event, but the general interrupt enable cannot disable it.
(4) Reserved interrupt vectors at addresses are not used in this device and can be used for regular program code if necessary. To maintain compatibility with other devices, reserve these locations.

Copyright © 2012–2018, Texas Instruments Incorporated

6.5 Memory Organization

Table 6-2 summarizes the memory map of the devices.

Table 6-2. Memory Organization(1)

		CC430F6147 CC430F5147	CC430F6145 CC430F5145 CC430F5125	CC430F6143 CC430F5143 CC430F5123
Main memory (flash)	Total Size	32KB	16KB	8KB
Main: interrupt vector		00FFFFh–00FF80h	00FFFFh–00FF80h	00FFFFh–00FF80h
Main: code memory	Bank 0	32KB 00FFFFh–008000h	16KB 00FFFFh–00C000h	8KB 00FFFFh–00E000h
RAM	Total Size	4KB	2KB	2KB
	Sect 1	2KB 002BFFh–002400h	not available	not available
	Sect 0	1.875KB 0023FFh–001C80h	1.875KB 0023FFh–001C80h	1.875KB 0023FFh–001C80h
Backup RAM(2)		128 B 001C7Fh–001C00h	128 B 001C7Fh–001C00h	128 B 001C7Fh–001C00h
Device descriptor		128 B 001AFFh–001A80h	128 B 001AFFh–001A80h	128 B 001AFFh–001A80h
		128 B 001A7Fh–001A00h	128 B 001A7Fh–001A00h	128 B 001A7Fh–001A00h
Information memory (flash)	Info A	128 B 0019FFh–001980h	128 B 0019FFh–001980h	128 B 0019FFh–001980h
	Info B	128 B 00197Fh–001900h	128 B 00197Fh–001900h	128 B 00197Fh–001900h
	Info C	128 B 0018FFh–001880h	128 B 0018FFh–001880h	128 B 0018FFh–001880h
	Info D	128 B 00187Fh–001800h	128 B 00187Fh–001800h	128 B 00187Fh–001800h
Bootloader (BSL) memory (flash)	BSL 3	512 B 0017FFh–001600h	512 B 0017FFh–001600h	512 B 0017FFh–001600h
	BSL 2	512 B 0015FFh–001400h	512 B 0015FFh–001400h	512 B 0015FFh–001400h
	BSL 1	512 B 0013FFh–001200h	512 B 0013FFh–001200h	512 B 0013FFh–001200h
	BSL 0	512 B 0011FFh–001000h	512 B 0011FFh–001000h	512 B 0011FFh–001000h
Peripherals		4KB 000FFFh–0h	4KB 000FFFh–0h	4KB 000FFFh–0h

(1) All memory regions not specified here are vacant memory and any access to them causes a Vacant Memory Interrupt.
(2) Content retained in LPM3.5 and LPM4.5.

6.6 Bootloader (BSL)

The BSL enables users to program the flash memory or RAM using various serial interfaces. Table 6-3 lists the BSL pin requirements. Access to the device memory through the BSL is protected by an user-defined password. BSL entry requires a specific entry sequence on the $\overline{RST}$/NMI/SBWTDIO and TEST/SBWTCK pins. For a complete description of the features of the BSL and its implementation, see the *MSP430 Programming With the Bootloader (BSL)*.

Table 6-3. UART BSL Pin Requirements and Functions

DEVICE SIGNAL	BSL FUNCTION
$\overline{RST}$/NMI/SBWTDIO	Entry sequence signal
TEST/SBWTCK	Entry sequence signal
P1.6	Data transmit
P1.5	Data receive
VCC	Power supply
VSS	Ground supply

6.7 JTAG Operation

6.7.1 JTAG Standard Interface

The CC430 family supports the standard JTAG interface which requires four signals for sending and receiving data. The JTAG signals are shared with general-purpose I/O. The TEST/SBWTCK pin is used to enable the JTAG signals. In addition to these signals, the $\overline{RST}$/NMI/SBWTDIO is required to interface with MSP430 development tools and device programmers. Table 6-4 lists the JTAG pin requirements. For further details on interfacing to development tools and device programmers, see the *MSP430 Hardware Tools User's Guide*. For a complete description of the features of the JTAG interface and its implementation, see *MSP430 Programming With the JTAG Interface*.

Table 6-4. JTAG Pin Requirements and Functions

DEVICE SIGNAL	DIRECTION	FUNCTION
PJ.3/TCK	IN	JTAG clock input
PJ.2/TMS	IN	JTAG state control
PJ.1/TDI/TCLK	IN	JTAG data input, TCLK input
PJ.0/TDO	OUT	JTAG data output
TEST/SBWTCK	IN	Enable JTAG pins
$\overline{RST}$/NMI/SBWTDIO	IN	External reset
VCC		Power supply
VSS		Ground supply

6.7.2 Spy-Bi-Wire Interface

In addition to the standard JTAG interface, the CC430 family supports the two wire Spy-Bi-Wire interface. Spy-Bi-Wire can be used to interface with MSP430 development tools and device programmers. Table 6-5 lists the Spy-Bi-Wire interface pin requirements. For further details on interfacing to development tools and device programmers, see the *MSP430 Hardware Tools User's Guide*. For a complete description of the features of the JTAG interface and its implementation, see *MSP430 Programming With the JTAG Interface*.

Copyright © 2012–2018, Texas Instruments Incorporated

Table 6-5. Spy-Bi-Wire Pin Requirements and Functions

DEVICE SIGNAL	DIRECTION	FUNCTION
TEST/SBWTCK	IN	Spy-Bi-Wire clock input
$\overline{\text{RST}}$/NMI/SBWTDIO	IN, OUT	Spy-Bi-Wire data input/output
VCC		Power supply
VSS		Ground supply

6.8 Flash Memory

The flash memory can be programmed through the JTAG port, Spy-Bi-Wire (SBW), or in-system by the CPU. The CPU can perform single-byte, single-word, and long-word writes to the flash memory. Features of the flash memory include:

- Flash memory has n segments of main memory and four segments of information memory (Info A to Info D) of 128 bytes each. Each segment in main memory is 512 bytes in size.
- Segments 0 to n may be erased in one step, or each segment may be individually erased.
- Segments Info A to Info D can be erased individually, or as a group with the main memory segments. Segments Info A to Info D are also called *information memory*.
- Segment A can be locked separately.

6.9 RAM

The RAM is made up of n sectors. Each sector can be completely powered down to save leakage; however all data are lost. Features of the RAM include:

- RAM has n sectors of 2k bytes each.
- Each sector 0 to n can be complete disabled; however, data retention is lost.
- Each sector 0 to n automatically enters low-power retention mode when possible.

6.10 Backup RAM

The backup RAM provides 128 bytes of memory that are retained even in LPM3.5 and LPM4.5 when the core is powered down.

6.11 Peripherals

Peripherals are connected to the CPU through data, address, and control buses and can be handled using all instructions. For complete module descriptions, see the *CC430 Family User's Guide*.

6.11.1 Oscillator and System Clock

The Unified Clock System (UCS) module includes support for a 32768-Hz watch crystal oscillator, an internal very-low-power low-frequency oscillator (VLO), an internal trimmed low-frequency oscillator (REFO), an integrated internal digitally controlled oscillator (DCO), and a high-frequency crystal oscillator. The UCS module is designed to meet the requirements of both low system cost and low-power consumption. The UCS module features digital frequency locked loop (FLL) hardware that, in conjunction with a digital modulator, stabilizes the DCO frequency to a programmable multiple of the watch crystal frequency. The internal DCO provides a fast turnon clock source and stabilizes in less than 5 µs. The UCS module provides the following clock signals:

- Auxiliary clock (ACLK), sourced from a 32768-Hz watch crystal, a high-frequency crystal, the internal low-frequency oscillator (VLO), or the trimmed low-frequency oscillator (REFO).
- Main clock (MCLK), the system clock used by the CPU. MCLK can be sourced by same sources made available to ACLK.
- Sub-Main clock (SMCLK), the subsystem clock used by the peripheral modules. SMCLK can be sourced by same sources made available to ACLK.
- ACLK/n, the buffered output of ACLK, ACLK/2, ACLK/4, ACLK/8, ACLK/16, ACLK/32.

Copyright © 2012–2018, Texas Instruments Incorporated

6.11.2 Power-Management Module (PMM)

The PMM includes an integrated voltage regulator that supplies the core voltage to the device and contains programmable output levels to provide for power optimization. The PMM also includes supply voltage supervisor (SVS) and supply voltage monitoring (SVM) circuitry, as well as brownout protection. The brownout circuit is implemented to provide the proper internal reset signal to the device during power-on and power-off. The SVS/SVM circuitry detects if the supply voltage drops below a user-selectable level and supports both supply voltage supervision (the device is automatically reset) and supply voltage monitoring (the device is not automatically reset). SVS and SVM circuitry is available on the primary supply and core supply.

6.11.3 Digital I/O

Up to five 8-bit I/O ports are implemented: ports P1 through P5.

- All individual I/O bits are independently programmable.
- Any combination of input, output, and interrupt conditions is possible.
- Programmable pullup or pulldown on all ports.
- Programmable drive strength on all ports.
- Edge-selectable interrupt and LPM3.5 and LPM4.5 wake-up input capability is available for all the eight bits of ports P1 and P2.
- Read and write access to port-control registers is supported by all instructions.
- Ports can be accessed byte-wise (P1 through P5) or word-wise in pairs (PA and PB).

6.11.4 Port Mapping Controller

The port mapping controller allows the flexible and reconfigurable mapping of digital functions to port pins of ports P1 through P3 (see Table 6-6). Table 6-7 lists the default settings for all pins that support port mapping.

Table 6-6. Port Mapping Mnemonics and Functions

VALUE	PxMAPy MNEMONIC	INPUT PIN FUNCTION (PxDIR.y = 0)	OUTPUT PIN FUNCTION (PxDIR.y = 1)
0	PM_NONE	None	DVSS
1 (1)	PM_CBOUT0	–	Comparator_B output (on TA0 clock input)
	PM_TA0CLK	TA0 clock input	–
2 (1)	PM_CBOUT1	–	Comparator_B output (on TA1 clock input)
	PM_TA1CLK	TA1 clock input	–
3	PM_ACLK	None	ACLK output
4	PM_MCLK	None	MCLK output
5	PM_SMCLK	None	SMCLK output
6	PM_RTCCLK	None	RTCCLK output
7 (1)	PM_ADC10CLK	–	ADC10CLK output
	PM_DMAE0	DMA external trigger input	–
8	PM_SVMOUT	None	SVM output
9	PM_TA0CCR0A	TA0 CCR0 capture input CCI0A	TA0 CCR0 compare output Out0
10	PM_TA0CCR1A	TA0 CCR1 capture input CCI1A	TA0 CCR1 compare output Out1
11	PM_TA0CCR2A	TA0 CCR2 capture input CCI2A	TA0 CCR2 compare output Out2
12	PM_TA0CCR3A	TA0 CCR3 capture input CCI3A	TA0 CCR3 compare output Out3
13	PM_TA0CCR4A	TA0 CCR4 capture input CCI4A	TA0 CCR4 compare output Out4
14	PM_TA1CCR0A	TA1 CCR0 capture input CCI0A	TA1 CCR0 compare output Out0
15	PM_TA1CCR1A	TA1 CCR1 capture input CCI1A	TA1 CCR1 compare output Out1
16	PM_TA1CCR2A	TA1 CCR2 capture input CCI2A	TA1 CCR2 compare output Out2

(1) Input or output function is selected by the corresponding setting in the port direction register PxDIR.

Copyright © 2012–2018, Texas Instruments Incorporated

Table 6-6. Port Mapping Mnemonics and Functions (continued)

VALUE	PxMAPy MNEMONIC	INPUT PIN FUNCTION (PxDIR.y = 0)	OUTPUT PIN FUNCTION (PxDIR.y = 1)
17 (2)	PM_UCA0RXD	USCI_A0 UART RXD (direction controlled by USCI – input)	
	PM_UCA0SOMI	USCI_A0 SPI slave out master in (direction controlled by USCI)	
18 (2)	PM_UCA0TXD	USCI_A0 UART TXD (direction controlled by USCI – output)	
	PM_UCA0SIMO	USCI_A0 SPI slave in master out (direction controlled by USCI)	
19 (3)	PM_UCA0CLK	USCI_A0 clock input/output (direction controlled by USCI)	
	PM_UCB0STE	USCI_B0 SPI slave transmit enable (direction controlled by USCI – input)	
20 (4)	PM_UCB0SOMI	USCI_B0 SPI slave out master in (direction controlled by USCI)	
	PM_UCB0SCL	USCI_B0 I^2C clock (open drain and direction controlled by USCI)	
21 (4)	PM_UCB0SIMO	USCI_B0 SPI slave in master out (direction controlled by USCI)	
	PM_UCB0SDA	USCI_B0 I^2C data (open drain and direction controlled by USCI)	
22 (5)	PM_UCB0CLK	USCI_B0 clock input/output (direction controlled by USCI)	
	PM_UCA0STE	USCI_A0 SPI slave transmit enable (direction controlled by USCI – input)	
23	PM_RFGDO0	Radio GDO0 (direction controlled by Radio)	
24	PM_RFGDO1	Radio GDO1 (direction controlled by Radio)	
25	PM_RFGDO2	Radio GDO2 (direction controlled by Radio)	
26	Reserved	None	DVSS
27	Reserved	None	DVSS
28	Reserved	None	DVSS
29	Reserved	None	DVSS
30	Reserved	None	DVSS
31 (0FFh) (6)	PM_ANALOG	Disables the output driver and the input Schmitt trigger to prevent parasitic cross currents when applying analog signals.	

(2) UART or SPI functionality is determined by the selected USCI mode.
(3) UCA0CLK function takes precedence over UCB0STE function. If the mapped pin is required as UCA0CLK input or output, USCI_B0 is forced to 3-wire SPI mode even if 4-wire mode is selected.
(4) SPI or I^2C functionality is determined by the selected USCI mode. If I^2C functionality is selected, the output of the mapped pin drives only the logical 0 to V_{SS} level.
(5) UCB0CLK function takes precedence over UCA0STE function. If the mapped pin is required as UCB0CLK input or output, USCI_A0 is forced to 3-wire SPI mode even if 4-wire mode is selected.
(6) The value of the PM_ANALOG mnemonic is set to 0FFh. The port mapping registers are only 5 bits wide and the upper bits are ignored resulting in a read out value of 31.

Table 6-7. Default Mapping

PIN	PxMAPy MNEMONIC	INPUT PIN FUNCTION (PxDIR.y = 0)	OUTPUT PIN FUNCTION (PxDIR.y = 1)
P1.0/P1MAP0	PM_RFGDO0	None	Radio GDO0
P1.1/P1MAP1	PM_RFGDO2	None	Radio GDO2
P1.2/P1MAP2	PM_UCB0SOMI/PM_UCB0SCL	USCI_B0 SPI slave out master in (direction controlled by USCI) USCI_B0 I^2C clock (open drain and direction controlled by USCI)	
P1.3/P1MAP3	PM_UCB0SIMO/PM_UCB0SDA	USCI_B0 SPI slave in master out (direction controlled by USCI) USCI_B0 I^2C data (open drain and direction controlled by USCI)	
P1.4/P1MAP4	PM_UCB0CLK/PM_UCA0STE	USCI_B0 clock input/output (direction controlled by USCI) USCI_A0 SPI slave transmit enable (direction controlled by USCI – input)	
P1.5/P1MAP5	PM_UCA0RXD/PM_UCA0SOMI	USCI_A0 UART RXD (direction controlled by USCI – input) USCI_A0 SPI slave out master in (direction controlled by USCI)	
P1.6/P1MAP6	PM_UCA0TXD/PM_UCA0SIMO	USCI_A0 UART TXD (direction controlled by USCI – output) USCI_A0 SPI slave in master out (direction controlled by USCI)	
P1.7/P1MAP7	PM_UCA0CLK/PM_UCB0STE	USCI_A0 clock input/output (direction controlled by USCI) USCI_B0 SPI slave transmit enable (direction controlled by USCI – input)	
P2.0/P2MAP0	PM_CBOUT1/PM_TA1CLK	TA1 clock input	Comparator_B output
P2.1/P2MAP1	PM_TA1CCR0A	TA1 CCR0 capture input CCI0A	TA1 CCR0 compare output Out0

Table 6-7. Default Mapping (continued)

PIN	PxMAPy MNEMONIC	INPUT PIN FUNCTION (PxDIR.y = 0)	OUTPUT PIN FUNCTION (PxDIR.y = 1)
P2.2/P2MAP2	PM_TA1CCR1A	TA1 CCR1 capture input CCI1A	TA1 CCR1 compare output Out1
P2.3/P2MAP3	PM_TA1CCR2A	TA1 CCR2 capture input CCI2A	TA1 CCR2 compare output Out2
P2.4/P2MAP4	PM_RTCCLK	None	RTCCLK output
P2.5/P2MAP5	PM_SVMOUT	None	SVM output
P2.6/P2MAP6	PM_ACLK	None	ACLK output
P2.7/P2MAP7	PM_ADC10CLK/PM_DMAE0	DMA external trigger input	ADC10CLK output
P3.0/P3MAP0	PM_CBOUT0/PM_TA0CLK	TA0 clock input	Comparator_B output
P3.1/P3MAP1	PM_TA0CCR0A	TA0 CCR0 capture input CCI0A	TA0 CCR0 compare output Out0
P3.2/P3MAP2	PM_TA0CCR1A	TA0 CCR1 capture input CCI1A	TA0 CCR1 compare output Out1
P3.3/P3MAP3	PM_TA0CCR2A	TA0 CCR2 capture input CCI2A	TA0 CCR2 compare output Out2
P3.4/P3MAP4	PM_TA0CCR3A	TA0 CCR3 capture input CCI3A	TA0 CCR3 compare output Out3
P3.5/P3MAP5	PM_TA0CCR4A	TA0 CCR4 capture input CCI4A	TA0 CCR4 compare output Out4
P3.6/P3MAP6	PM_RFGDO1	None	Radio GDO1
P3.7/P3MAP7	PM_SMCLK	None	SMCLK output

6.11.5 System Module (SYS)

The SYS module handles many of the system functions within the device. These functions include power-on reset and power-up clear handling, NMI source selection and management, reset interrupt vector generators, bootloader entry mechanisms, and configuration management (device descriptors) (see Table 6-8). SYS also includes a data exchange mechanism through JTAG called a JTAG mailbox that can be used in the application.

Table 6-8. System Module Interrupt Vector Registers

INTERRUPT VECTOR REGISTER	ADDRESS	INTERRUPT EVENT	VALUE	PRIORITY
SYSRSTIV, System Reset	019Eh	No interrupt pending	00h	
		Brownout (BOR)	02h	Highest
		RST/NMI (POR)	04h	
		DoBOR (BOR)	06h	
		Reserved	08h	
		Security violation (BOR)	0Ah	
		SVSL (POR)	0Ch	
		SVSH (POR)	0Eh	
		SVML_OVP (POR)	10h	
		SVMH_OVP (POR)	12h	
		DoPOR (POR)	14h	
		WDT time-out (PUC)	16h	
		WDT password violation (PUC)	18h	
		KEYV flash password violation (PUC)	1Ah	
		Reserved	1Ch	
		Peripheral area fetch (PUC)	1Eh	
		PMM password violation (PUC)	20h	
		Reserved	22h to 3Eh	Lowest

Copyright © 2012–2018, Texas Instruments Incorporated

Table 6-8. System Module Interrupt Vector Registers (continued)

INTERRUPT VECTOR REGISTER	ADDRESS	INTERRUPT EVENT	VALUE	PRIORITY
SYSSNIV, System NMI	019Ch	No interrupt pending	00h	
		SVMLIFG	02h	Highest
		SVMHIFG	04h	
		DLYLIFG	06h	
		DLYHIFG	08h	
		VMAIFG	0Ah	
		JMBINIFG	0Ch	
		JMBOUTIFG	0Eh	
		VLRLIFG	10h	
		VLRHIFG	12h	
		Reserved	14h to 1Eh	Lowest
SYSUNIV, User NMI	019Ah	No interrupt pending	00h	
		NMIIFG	02h	Highest
		OFIFG	04h	
		ACCVIFG	06h	
		Reserved	08h to 1Eh	Lowest

6.11.6 DMA Controller

The DMA controller allows movement of data from one memory address to another without CPU intervention. Using the DMA controller can increase the throughput of peripheral modules. The DMA controller reduces system power consumption by allowing the CPU to remain in sleep mode, without having to awaken to move data to or from a peripheral. Table 6-9 lists the available triggers for DMA operation.

Table 6-9. DMA Trigger Assignments(1)

TRIGGER	CHANNEL		
	0	1	2
0	DMAREQ	DMAREQ	DMAREQ
1	TA0CCR0 CCIFG	TA0CCR0 CCIFG	TA0CCR0 CCIFG
2	TA0CCR2 CCIFG	TA0CCR2 CCIFG	TA0CCR2 CCIFG
3	TA1CCR0 CCIFG	TA1CCR0 CCIFG	TA1CCR0 CCIFG
4	TA1CCR2 CCIFG	TA1CCR2 CCIFG	TA1CCR2 CCIFG
5	Reserved	Reserved	Reserved
6	Reserved	Reserved	Reserved
7	Reserved	Reserved	Reserved
8	Reserved	Reserved	Reserved
9	Reserved	Reserved	Reserved
10	Reserved	Reserved	Reserved
11	Reserved	Reserved	Reserved
12	Reserved	Reserved	Reserved
13	Reserved	Reserved	Reserved
14	RFRXIFG	RFRXIFG	RFRXIFG
15	RFTXIFG	RFTXIFG	RFTXIFG
16	UCA0RXIFG	UCA0RXIFG	UCA0RXIFG
17	UCA0TXIFG	UCA0TXIFG	UCA0TXIFG
18	UCB0RXIFG	UCB0RXIFG	UCB0RXIFG
19	UCB0TXIFG	UCB0TXIFG	UCB0TXIFG
20	Reserved	Reserved	Reserved
21	Reserved	Reserved	Reserved
22	Reserved	Reserved	Reserved
23	Reserved	Reserved	Reserved
24	ADC10IFG0(2)	ADC10IFG0(2)	ADC10IFG0(2)
25	Reserved	Reserved	Reserved
26	Reserved	Reserved	Reserved
27	Reserved	Reserved	Reserved
28	Reserved	Reserved	Reserved
29	MPY ready	MPY ready	MPY ready
30	DMA2IFG	DMA0IFG	DMA1IFG
31	DMAE0	DMAE0	DMAE0

(1) Reserved DMA triggers may be used by other devices in the family. Reserved DMA triggers will not cause any DMA trigger event when selected.
(2) Only on CC430F614x and CC430F514x. Reserved on CC430F512x.

Copyright © 2012–2018, Texas Instruments Incorporated

6.11.7 Watchdog Timer (WDT_A)

The primary function of the watchdog timer is to perform a controlled system restart after a software problem occurs. If the selected time interval expires, a system reset is generated. If the watchdog function is not needed in an application, the timer can be configured as an interval timer and can generate interrupts at selected time intervals.

6.11.8 CRC16

The CRC16 module produces a signature based on a sequence of entered data values and can be used for data checking purposes. The CRC16 module signature is based on the CRC-CCITT standard.

6.11.9 Hardware Multiplier

The multiplication operation is supported by a dedicated peripheral module. The module performs operations with 32-, 24-, 16-, and 8-bit operands. The module supports signed and unsigned multiplication as well as signed and unsigned multiply-and-accumulate operations.

6.11.10 AES128 Accelerator

The AES accelerator module performs encryption and decryption of 128-bit data with 128-bit keys according to the Advanced Encryption Standard (AES) (FIPS PUB 197) in hardware.

6.11.11 Universal Serial Communication Interface (USCI)

The USCI module is used for serial data communication. The USCI module supports synchronous communication protocols such as SPI (3-pin or 4-pin) and I^2C, and asynchronous communication protocols such as UART, enhanced UART with automatic baud-rate detection, and IrDA.

The USCI_An module provides support for SPI (3-pin or 4-pin), UART, enhanced UART, and IrDA.

The USCI_Bn module provides support for SPI (3-pin or 4-pin) and I^2C.

One USCI_A0 and one USCI_B0 modules are implemented.

6.11.12 TA0

TA0 is a 16-bit timer/counter (Timer_A type) with five capture/compare registers. TA0 can support multiple capture/compares, PWM outputs, and interval timing (see Table 6-10). TA0 also has extensive interrupt capabilities. Interrupts may be generated from the counter on overflow conditions and from each of the capture/compare registers.

Table 6-10. TA0 Signal Connections

DEVICE INPUT SIGNAL	MODULE INPUT NAME	MODULE BLOCK	MODULE OUTPUT SIGNAL	DEVICE OUTPUT SIGNAL
PM_TA0CLK	TACLK	Timer	NA	
ACLK (internal)	ACLK			
SMCLK (internal)	SMCLK			
RFCLK/192 (1)	INCLK			
PM_TA0CCR0A	CCI0A	CCR0	TA0	PM_TA0CCR0A
DVSS	CCI0B			
DVSS	GND			
DVCC	V_{CC}			
PM_TA0CCR1A	CCI1A	CCR1	TA1	PM_TA0CCR1A
CBOUT (internal)	CCI1B			ADC10 (internal) (2) ADC10SHSx = {1}
DVSS	GND			
DVCC	V_{CC}			
PM_TA0CCR2A	CCI2A	CCR2	TA2	PM_TA0CCR2A
ACLK (internal)	CCI2B			
DVSS	GND			
DVCC	V_{CC}			
PM_TA0CCR3A	CCI3A	CCR3	TA3	PM_TA0CCR3A
GDO1 from radio (internal)	CCI3B			
DVSS	GND			
DVCC	V_{CC}			
PM_TA0CCR4A	CCI4A	CCR4	TA4	PM_TA0CCR4A
GDO2 from radio (internal)	CCI4B			
DVSS	GND			
DVCC	V_{CC}			

(1) If a different RFCLK divider setting is selected for a radio GDO output, this divider setting is also used for the Timer_A INCLK.
(2) Only on CC430F614x and CC430F514x.

Copyright © 2012–2018, Texas Instruments Incorporated

6.11.13 TA1

TA1 is a 16-bit timer/counter (Timer_A type) with three capture/compare registers. TA1 can support multiple capture/compares, PWM outputs, and interval timing (see Table 6-11). TA1 also has extensive interrupt capabilities. Interrupts may be generated from the counter on overflow conditions and from each of the capture/compare registers.

Table 6-11. TA1 Signal Connections

DEVICE INPUT SIGNAL	MODULE INPUT NAME	MODULE BLOCK	MODULE OUTPUT SIGNAL	DEVICE OUTPUT SIGNAL
				PZ
PM_TA1CLK	TACLK	Timer	NA	
ACLK (internal)	ACLK			
SMCLK (internal)	SMCLK			
RFCLK/192[(1)]	INCLK			
PM_TA1CCR0A	CCI0A	CCR0	TA0	PM_TA1CCR0A
RF Async. Output (internal)	CCI0B			RF Async. Input (internal)
DVSS	GND			
DVCC	V_{CC}			
PM_TA1CCR1A	CCI1A	CCR1	TA1	PM_TA1CCR1A
CBOUT (internal)	CCI1B			
DVSS	GND			
DVCC	V_{CC}			
PM_TA1CCR2A	CCI2A	CCR2	TA2	PM_TA1CCR2A
ACLK (internal)	CCI2B			
DVSS	GND			
DVCC	V_{CC}			

(1) If a different RFCLK divider setting is selected for a radio GDO output, this divider setting is also used for the Timer_A INCLK.

6.11.14 Real-Time Clock (RTC_D)

The RTC_D module can be used as a general-purpose 32-bit counter (counter mode) or as an integrated real-time clock (RTC) (calendar mode). In counter mode, the RTC_D also includes two independent 8-bit timers that can be cascaded to form a 16-bit timer/counter. Both timers can be read and written by software. Calendar mode integrates an internal calendar that compensates for months with less than 31 days and includes leap year correction. The RTC_D also supports flexible alarm functions and offset-calibration hardware.

6.11.15 Voltage Reference (REF) (Including Output)

REF generates all of the critical reference voltages that can be used by the various analog peripherals in the device. These peripherals include the ADC10_A, LCD_B, and COMP_B modules.

REF can also provide the ADC reference voltages to the VREF+ pin (see the pin schematics in Section 6.12).

6.11.16 LCD_B (Only CC430F614x)

The LCD_B driver generates the segment and common signals required to drive a Liquid Crystal Display (LCD). The LCD_B controller has dedicated data memories to hold segment drive information. Common and segment signals are generated as defined by the mode. Static, 2-, 3-, and 4-mux LCDs are supported. The module can provide a LCD voltage independent of the supply voltage with its integrated charge pump. It is possible to control the level of the LCD voltage and thus contrast by software. The module also provides an automatic blinking capability for individual segments.

6.11.17 Comparator_B

The primary function of the Comparator_B module is to support precision slope analog-to-digital conversions, battery voltage supervision, and monitoring of external analog signals.

6.11.18 ADC10_A (CC430F614x and CC430F514x Only)

The ADC10_A module supports fast 10-bit analog-to-digital conversions. The module implements a 10-bit SAR core, sample select control, reference generator, and a conversion result buffer. A window comparator with a lower and upper limits allows result monitoring independent of the CPU with three window comparator interrupt flags.

6.11.19 Embedded Emulation Module (EEM) (S Version)

The EEM supports real-time in-system debugging. The S version of the EEM has the following features:

- Three hardware triggers or breakpoints on memory access
- One hardware trigger or breakpoint on CPU register write access
- Up to four hardware triggers can be combined to form complex triggers or breakpoints
- One cycle counter
- Clock control on module level

Copyright © 2012–2018, Texas Instruments Incorporated

6.11.20 Peripheral File Map

Table 6-12 lists the base address for the registers of each peripheral.

Table 6-12. Peripherals

MODULE NAME	BASE ADDRESS	OFFSET ADDRESS RANGE
Special Functions (see Table 6-13)	0100h	000h–01Fh
PMM (see Table 6-14)	0120h	000h–00Fh
Flash Control (see Table 6-15)	0140h	000h–00Fh
CRC16 (see Table 6-16)	0150h	000h–007h
RAM Control (see Table 6-17)	0158h	000h–001h
Watchdog (see Table 6-18)	015Ch	000h–001h
UCS (see Table 6-19)	0160h	000h–01Fh
SYS (see Table 6-20)	0180h	000h–01Fh
Shared Reference (see Table 6-21)	01B0h	000h–001h
Port Mapping Control (see Table 6-22)	01C0h	000h–007h
Port Mapping Port P1 (see Table 6-23)	01C8h	000h–007h
Port Mapping Port P2 (see Table 6-24)	01D0h	000h–007h
Port Mapping Port P3 (see Table 6-25)	01D8h	000h–007h
Port P1, P2 (see Table 6-26)	0200h	000h–01Fh
Port P3, P4 (see Table 6-27) (P4 not available on CC430F514x and CC430F512x)	0220h	000h–01Fh
Port P5 (see Table 6-28)	0240h	000h–01Fh
Port PJ (see Table 6-29)	0320h	000h–01Fh
TA0 (see Table 6-30)	0340h	000h–03Fh
TA1 (see Table 6-31)	0380h	000h–03Fh
RTC_D (see Table 6-32)	04A0h	000h–01Fh
32-Bit Hardware Multiplier (see Table 6-33)	04C0h	000h–02Fh
DMA Module Control (see Table 6-34)	0500h	000h–00Fh
DMA Channel 0 (see Table 6-35)	0510h	000h–00Fh
DMA Channel 1 (see Table 6-36)	0520h	000h–00Fh
DMA Channel 2 (see Table 6-37)	0530h	000h–00Fh
USCI_A0 (see Table 6-38)	05C0h	000h–01Fh
USCI_B0 (see Table 6-39)	05E0h	000h–01Fh
ADC10 (see Table 6-40) (only CC430F614x and CC430F514x)	0740h	000h–01Fh
Comparator_B (see Table 6-41)	08C0h	000h–00Fh
AES Accelerator (see Table 6-42)	09C0h	000h–00Fh
LCD_B (see Table 6-43 (only CC430F614x)	0A00h	000h–05Fh
Radio Interface (see Table 6-44)	0F00h	000h–03Fh

Table 6-13. Special Function Registers (Base Address: 0100h)

REGISTER DESCRIPTION	ACRONYM	OFFSET
SFR interrupt enable	SFRIE1	00h
SFR interrupt flag	SFRIFG1	02h
SFR reset pin control	SFRRPCR	04h

Table 6-14. PMM Registers (Base Address: 0120h)

REGISTER DESCRIPTION	ACRONYM	OFFSET
PMM control 0	PMMCTL0	00h
PMM control 1	PMMCTL1	02h
SVS high-side control	SVSMHCTL	04h
SVS low-side control	SVSMLCTL	06h
PMM interrupt flags	PMMIFG	0Ch
PMM interrupt enable	PMMIE	0Eh
PMM power mode 5 control	PM5CTL0	10h

Table 6-15. Flash Control Registers (Base Address: 0140h)

REGISTER DESCRIPTION	ACRONYM	OFFSET
Flash control 1	FCTL1	00h
Flash control 3	FCTL3	04h
Flash control 4	FCTL4	06h

Table 6-16. CRC16 Registers (Base Address: 0150h)

REGISTER DESCRIPTION	ACRONYM	OFFSET
CRC data input	CRC16DI	00h
CRC data input reverse byte	CRCDIRB	02h
CRC initialization and result	CRCINIRES	04h
CRC result reverse byte	CRCRESR	06h

Table 6-17. RAM Control Registers (Base Address: 0158h)

REGISTER DESCRIPTION	ACRONYM	OFFSET
RAM control 0	RCCTL0	00h

Table 6-18. Watchdog Registers (Base Address: 015Ch)

REGISTER DESCRIPTION	ACRONYM	OFFSET
Watchdog timer control	WDTCTL	00h

Table 6-19. UCS Registers (Base Address: 0160h)

REGISTER DESCRIPTION	ACRONYM	OFFSET
UCS control 0	UCSCTL0	00h
UCS control 1	UCSCTL1	02h
UCS control 2	UCSCTL2	04h
UCS control 3	UCSCTL3	06h
UCS control 4	UCSCTL4	08h
UCS control 5	UCSCTL5	0Ah
UCS control 6	UCSCTL6	0Ch
UCS control 7	UCSCTL7	0Eh

Copyright © 2012–2018, Texas Instruments Incorporated

Table 6-19. UCS Registers (Base Address: 0160h) (continued)

REGISTER DESCRIPTION	ACRONYM	OFFSET
UCS control 8	UCSCTL8	10h

Table 6-20. SYS Registers (Base Address: 0180h)

REGISTER DESCRIPTION	ACRONYM	OFFSET
System control	SYSCTL	00h
Bootloader configuration area	SYSBSLC	02h
JTAG mailbox control	SYSJMBC	06h
JTAG mailbox input 0	SYSJMBI0	08h
JTAG mailbox input 1	SYSJMBI1	0Ah
JTAG mailbox output 0	SYSJMBO0	0Ch
JTAG mailbox output 1	SYSJMBO1	0Eh
Bus error vector generator	SYSBERRIV	18h
User NMI vector generator	SYSUNIV	1Ah
System NMI vector generator	SYSSNIV	1Ch
Reset vector generator	SYSRSTIV	1Eh

Table 6-21. Shared Reference Registers (Base Address: 01B0h)

REGISTER DESCRIPTION	ACRONYM	OFFSET
Shared reference control	REFCTL	00h

Table 6-22. Port Mapping Control Registers (Base Address: 01C0h)

REGISTER DESCRIPTION	ACRONYM	OFFSET
Port mapping key	PMAPKEYID	00h
Port mapping control	PMAPCTL	02h

Table 6-23. Port Mapping Port P1 Registers (Base Address: 01C8h)

REGISTER DESCRIPTION	ACRONYM	OFFSET
Port P1.0 mapping	P1MAP0	00h
Port P1.1 mapping	P1MAP1	01h
Port P1.2 mapping	P1MAP2	02h
Port P1.3 mapping	P1MAP3	03h
Port P1.4 mapping	P1MAP4	04h
Port P1.5 mapping	P1MAP5	05h
Port P1.6 mapping	P1MAP6	06h
Port P1.7 mapping	P1MAP7	07h

Table 6-24. Port Mapping Port P2 Registers (Base Address: 01D0h)

REGISTER DESCRIPTION	ACRONYM	OFFSET
Port P2.0 mapping	P2MAP0	00h
Port P2.1 mapping	P2MAP1	01h
Port P2.2 mapping	P2MAP2	02h
Port P2.3 mapping	P2MAP3	03h
Port P2.4 mapping	P2MAP4	04h
Port P2.5 mapping	P2MAP5	05h
Port P2.6 mapping	P2MAP6	06h
Port P2.7 mapping	P2MAP7	07h

Copyright © 2012–2018, Texas Instruments Incorporated

Table 6-25. Port Mapping Port P3 Registers (Base Address: 01D8h)

REGISTER DESCRIPTION	ACRONYM	OFFSET
Port P3.0 mapping	P3MAP0	00h
Port P3.1 mapping	P3MAP1	01h
Port P3.2 mapping	P3MAP2	02h
Port P3.3 mapping	P3MAP3	03h
Port P3.4 mapping	P3MAP4	04h
Port P3.5 mapping	P3MAP5	05h
Port P3.6 mapping	P3MAP6	06h
Port P3.7 mapping	P3MAP7	07h

Table 6-26. Port P1, P2 Registers (Base Address: 0200h)

REGISTER DESCRIPTION	ACRONYM	OFFSET
Port P1 input	P1IN	00h
Port P1 output	P1OUT	02h
Port P1 direction	P1DIR	04h
Port P1 resistor enable	P1REN	06h
Port P1 drive strength	P1DS	08h
Port P1 selection	P1SEL	0Ah
Port P1 interrupt vector word	P1IV	0Eh
Port P1 interrupt edge select	P1IES	18h
Port P1 interrupt enable	P1IE	1Ah
Port P1 interrupt flag	P1IFG	1Ch
Port P2 input	P2IN	01h
Port P2 output	P2OUT	03h
Port P2 direction	P2DIR	05h
Port P2 resistor enable	P2REN	07h
Port P2 drive strength	P2DS	09h
Port P2 selection	P2SEL	0Bh
Port P2 interrupt vector word	P2IV	1Eh
Port P2 interrupt edge select	P2IES	19h
Port P2 interrupt enable	P2IE	1Bh
Port P2 interrupt flag	P2IFG	1Dh

Table 6-27. Port P3, P4 Registers (Base Address: 0220h)

REGISTER DESCRIPTION	ACRONYM	OFFSET
Port P3 input	P3IN	00h
Port P3 output	P3OUT	02h
Port P3 direction	P3DIR	04h
Port P3 resistor enable	P3REN	06h
Port P3 drive strength	P3DS	08h
Port P3 selection	P3SEL	0Ah
Port P4 input	P4IN	01h
Port P4 output	P4OUT	03h
Port P4 direction	P4DIR	05h
Port P4 resistor enable	P4REN	07h
Port P4 drive strength	P4DS	09h
Port P4 selection	P4SEL	0Bh

Copyright © 2012–2018, Texas Instruments Incorporated

Table 6-28. Port P5 Registers (Base Address: 0240h)

REGISTER DESCRIPTION	ACRONYM	OFFSET
Port P5 input	P5IN	00h
Port P5 output	P5OUT	02h
Port P5 direction	P5DIR	04h
Port P5 resistor enable	P5REN	06h
Port P5 drive strength	P5DS	08h
Port P5 selection	P5SEL	0Ah

Table 6-29. Port J Registers (Base Address: 0320h)

REGISTER DESCRIPTION	ACRONYM	OFFSET
Port PJ input	PJIN	00h
Port PJ output	PJOUT	02h
Port PJ direction	PJDIR	04h
Port PJ resistor enable	PJREN	06h
Port PJ drive strength	PJDS	08h

Table 6-30. TA0 Registers (Base Address: 0340h)

REGISTER DESCRIPTION	ACRONYM	OFFSET
TA0 control	TA0CTL	00h
Capture/compare control 0	TA0CCTL0	02h
Capture/compare control 1	TA0CCTL1	04h
Capture/compare control 2	TA0CCTL2	06h
Capture/compare control 3	TA0CCTL3	08h
Capture/compare control 4	TA0CCTL4	0Ah
TA0 counter	TA0R	10h
Capture/compare 0	TA0CCR0	12h
Capture/compare 1	TA0CCR1	14h
Capture/compare 2	TA0CCR2	16h
Capture/compare 3	TA0CCR3	18h
Capture/compare 4	TA0CCR4	1Ah
TA0 expansion 0	TA0EX0	20h
TA0 interrupt vector	TA0IV	2Eh

Table 6-31. TA1 Registers (Base Address: 0380h)

REGISTER DESCRIPTION	ACRONYM	OFFSET
TA1 control	TA1CTL	00h
Capture/compare control 0	TA1CCTL0	02h
Capture/compare control 1	TA1CCTL1	04h
Capture/compare control 2	TA1CCTL2	06h
TA1 counter	TA1R	10h
Capture/compare 0	TA1CCR0	12h
Capture/compare 1	TA1CCR1	14h
Capture/compare 2	TA1CCR2	16h
TA1 expansion 0	TA1EX0	20h
TA1 interrupt vector	TA1IV	2Eh

Copyright © 2012–2018, Texas Instruments Incorporated

Table 6-32. Real-Time Clock Registers (Base Address: 04A0h)

REGISTER DESCRIPTION	ACRONYM	OFFSET
RTC control 0	RTCCTL0	00h
RTC control 1	RTCCTL1	01h
RTC control 2	RTCCTL2	02h
RTC control 3	RTCCTL3	03h
RTC prescaler 0 control	RTCPS0CTL	08h
RTC prescaler 1 control	RTCPS1CTL	0Ah
RTC prescaler 0	RTCPS0	0Ch
RTC prescaler 1	RTCPS1	0Dh
RTC interrupt vector word	RTCIV	0Eh
RTC seconds/counter 1	RTCSEC/RTCNT1	10h
RTC minutes/counter 2	RTCMIN/RTCNT2	11h
RTC hours/counter 3	RTCHOUR/RTCNT3	12h
RTC day of week/counter 4	RTCDOW/RTCNT4	13h
RTC days	RTCDAY	14h
RTC month	RTCMON	15h
RTC year low	RTCYEARL	16h
RTC year high	RTCYEARH	17h
RTC alarm minutes	RTCAMIN	18h
RTC alarm hours	RTCAHOUR	19h
RTC alarm day of week	RTCADOW	1Ah
RTC alarm days	RTCADAY	1Bh

Table 6-33. 32-Bit Hardware Multiplier Registers (Base Address: 04C0h)

REGISTER DESCRIPTION	ACRONYM	OFFSET
16-bit operand 1 - multiply	MPY	00h
16-bit operand 1 - signed multiply	MPYS	02h
16-bit operand 1 - multiply accumulate	MAC	04h
16-bit operand 1 - signed multiply accumulate	MACS	06h
16-bit operand 2	OP2	08h
16 × 16 result low word	RESLO	0Ah
16 × 16 result high word	RESHI	0Ch
16 × 16 sum extension	SUMEXT	0Eh
32-bit operand 1 - multiply low word	MPY32L	10h
32-bit operand 1 - multiply high word	MPY32H	12h
32-bit operand 1 - signed multiply low word	MPYS32L	14h
32-bit operand 1 - signed multiply high word	MPYS32H	16h
32-bit operand 1 - multiply accumulate low word	MAC32L	18h
32-bit operand 1 - multiply accumulate high word	MAC32H	1Ah
32-bit operand 1 - signed multiply accumulate low word	MACS32L	1Ch
32-bit operand 1 - signed multiply accumulate high word	MACS32H	1Eh
32-bit operand 2 - low word	OP2L	20h
32-bit operand 2 - high word	OP2H	22h
32 × 32 result 0 - least significant word	RES0	24h
32 × 32 result 1	RES1	26h
32 × 32 result 2	RES2	28h
32 × 32 result 3 - most significant word	RES3	2Ah
MPY32 control 0	MPY32CTL0	2Ch

Copyright © 2012–2018, Texas Instruments Incorporated

Table 6-34. DMA Module Control Registers (Base Address: 0500h)

REGISTER DESCRIPTION	ACRONYM	OFFSET
DMA module control 0	DMACTL0	00h
DMA module control 1	DMACTL1	02h
DMA module control 2	DMACTL2	04h
DMA module control 3	DMACTL3	06h
DMA module control 4	DMACTL4	08h
DMA interrupt vector	DMAIV	0Ah

Table 6-35. DMA Channel 0 Registers (Base Address: 0510h)

REGISTER DESCRIPTION	ACRONYM	OFFSET
DMA channel 0 control	DMA0CTL	00h
DMA channel 0 source address low	DMA0SAL	02h
DMA channel 0 source address high	DMA0SAH	04h
DMA channel 0 destination address low	DMA0DAL	06h
DMA channel 0 destination address high	DMA0DAH	08h
DMA channel 0 transfer size	DMA0SZ	0Ah

Table 6-36. DMA Channel 1 Registers (Base Address: 0520h)

REGISTER DESCRIPTION	ACRONYM	OFFSET
DMA channel 1 control	DMA1CTL	00h
DMA channel 1 source address low	DMA1SAL	02h
DMA channel 1 source address high	DMA1SAH	04h
DMA channel 1 destination address low	DMA1DAL	06h
DMA channel 1 destination address high	DMA1DAH	08h
DMA channel 1 transfer size	DMA1SZ	0Ah

Table 6-37. DMA Channel 2 Registers (Base Address: 0530h)

REGISTER DESCRIPTION	ACRONYM	OFFSET
DMA channel 2 control	DMA2CTL	00h
DMA channel 2 source address low	DMA2SAL	02h
DMA channel 2 source address high	DMA2SAH	04h
DMA channel 2 destination address low	DMA2DAL	06h
DMA channel 2 destination address high	DMA2DAH	08h
DMA channel 2 transfer size	DMA2SZ	0Ah

Table 6-38. USCI_A0 Registers (Base Address: 05C0h)

REGISTER DESCRIPTION	ACRONYM	OFFSET
USCI control 1	UCA0CTL1	00h
USCI control 0	UCA0CTL0	01h
USCI baud rate 0	UCA0BR0	06h
USCI baud rate 1	UCA0BR1	07h
USCI modulation control	UCA0MCTL	08h
USCI status	UCA0STAT	0Ah
USCI receive buffer	UCA0RXBUF	0Ch
USCI transmit buffer	UCA0TXBUF	0Eh
USCI LIN control	UCA0ABCTL	10h
USCI IrDA transmit control	UCA0IRTCTL	12h
USCI IrDA receive control	UCA0IRRCTL	13h
USCI interrupt enable	UCA0IE	1Ch
USCI interrupt flags	UCA0IFG	1Dh
USCI interrupt vector word	UCA0IV	1Eh

Table 6-39. USCI_B0 Registers (Base Address: 05E0h)

REGISTER DESCRIPTION	ACRONYM	OFFSET
USCI synchronous control 1	UCB0CTL1	00h
USCI synchronous control 0	UCB0CTL0	01h
USCI synchronous bit rate 0	UCB0BR0	06h
USCI synchronous bit rate 1	UCB0BR1	07h
USCI synchronous status	UCB0STAT	0Ah
USCI synchronous receive buffer	UCB0RXBUF	0Ch
USCI synchronous transmit buffer	UCB0TXBUF	0Eh
USCI I2C own address	UCB0I2COA	10h
USCI I2C slave address	UCB0I2CSA	12h
USCI interrupt enable	UCB0IE	1Ch
USCI interrupt flags	UCB0IFG	1Dh
USCI interrupt vector word	UCB0IV	1Eh

Table 6-40. ADC10_A Registers (Base Address: 0740h)

REGISTER DESCRIPTION	ACRONYM	OFFSET
ADC10_A control 0	ADC10CTL0	00h
ADC10_A control 1	ADC10CTL1	02h
ADC10_A control 2	ADC10CTL2	04h
ADC10_A window comparator low threshold	ADC10LO	06h
ADC10_A window comparator high threshold	ADC10HI	08h
ADC10_A memory control 0	ADC10MCTL0	0Ah
ADC10_A conversion memory	ADC10MEM0	12h
ADC10_A interrupt enable	ADC10IE	1Ah
ADC10_A interrupt flags	ADC10IGH	1Ch
ADC10_A interrupt vector word	ADC10IV	1Eh

Copyright © 2012–2018, Texas Instruments Incorporated

Table 6-41. Comparator_B Registers (Base Address: 08C0h)

REGISTER DESCRIPTION	ACRONYM	OFFSET
Comp_B control 0	CBCTL0	00h
Comp_B control 1	CBCTL1	02h
Comp_B control 2	CBCTL2	04h
Comp_B control 3	CBCTL3	06h
Comp_B interrupt	CBINT	0Ch
Comp_B interrupt vector word	CBIV	0Eh

Table 6-42. AES Accelerator Registers (Base Address: 09C0h)

REGISTER DESCRIPTION	ACRONYM	OFFSET
AES accelerator control 0	AESACTL0	00h
Reserved		02h
AES accelerator status	AESASTAT	04h
AES accelerator key	AESAKEY	06h
AES accelerator data in	AESADIN	008h
AES accelerator data out	AESADOUT	00Ah

Table 6-43. LCD_B Registers (Base Address: 0A00h)

REGISTER DESCRIPTION	ACRONYM	OFFSET
LCD_B control 0	LCDBCTL0	000h
LCD_B control 1	LCDBCTL1	002h
LCD_B blinking control	LCDBBLKCTL	004h
LCD_B memory control	LCDBMEMCTL	006h
LCD_B voltage control	LCDBVCTL	008h
LCD_B port control 0	LCDBPCTL0	00Ah
LCD_B port control 1	LCDBPCTL1	00Ch
LCD_B charge pump control	LCDBCTL0	012h
LCD_B interrupt vector word	LCDBIV	01Eh
LCD_B memory 1	LCDM1	020h
LCD_B memory 2	LCDM2	021h
...		
LCD_B memory 14	LCDM14	02Dh
LCD_B blinking memory 1	LCDBM1	040h
LCD_B blinking memory 2	LCDBM2	041h
...		
LCD_B blinking memory 14	LCDBM14	04Dh

Table 6-44. Radio Interface Registers (Base Address: 0F00h)

REGISTER DESCRIPTION	ACRONYM	OFFSET
Radio interface control 0	RF1AIFCTL0	00h
Radio interface control 1	RF1AIFCTL1	02h
Radio interface error flag	RF1AIFERR	06h
Radio interface error vector word	RF1AIFERRV	0Ch
Radio interface interrupt vector word	RF1AIFIV	0Eh
Radio instruction word	RF1AINSTRW	10h
Radio instruction word, 1-byte auto-read	RF1AINSTR1W	12h
Radio instruction word, 2-byte auto-read	RF1AINSTR2W	14h
Radio data in	RF1ADINW	16h
Radio status word	RF1ASTATW	20h
Radio status word, 1-byte auto-read	RF1ASTAT1W	22h
Radio status word, 2-byte auto-read	RF1AISTAT2W	24h
Radio data out	RF1ADOUTW	28h
Radio data out, 1-byte auto-read	RF1ADOUT1W	2Ah
Radio data out, 2-byte auto-read	RF1ADOUT2W	2Ch
Radio core signal input	RF1AIN	30h
Radio core interrupt flag	RF1AIFG	32h
Radio core interrupt edge select	RF1AIES	34h
Radio core interrupt enable	RF1AIE	36h
Radio core interrupt vector word	RF1AIV	38h

Copyright © 2012–2018, Texas Instruments Incorporated

6.12 Input/Output Diagrams

6.12.1 Port P1 (P1.0 to P1.4) Input/Output With Schmitt Trigger

Figure 6-2 shows the port diagram. Table 6-45 summarizes the selection of the pin functions.

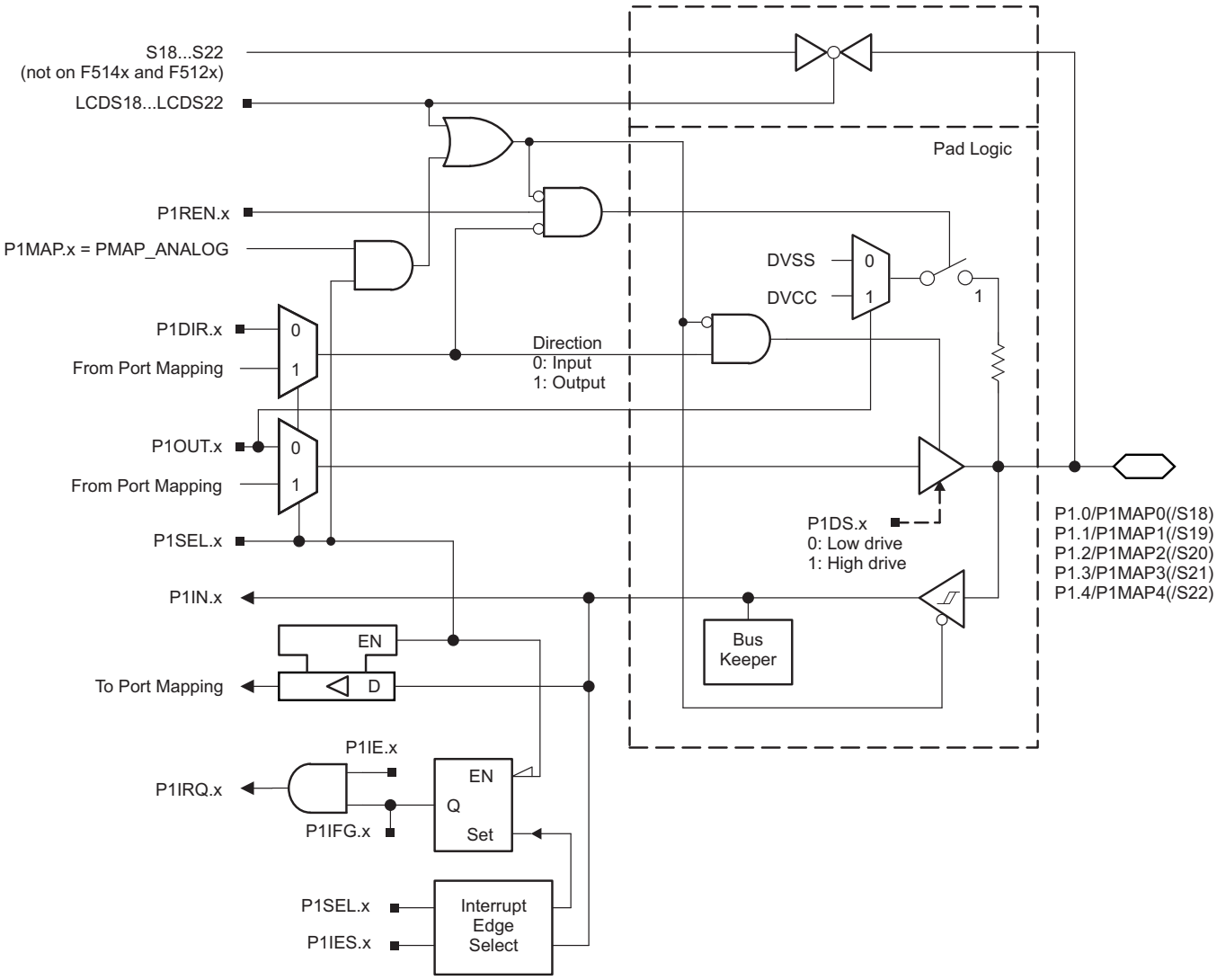

NOTE: CC430F514x and CC430F512x devices do not provide LCD functionality.

Figure 6-2. Port P1 (P1.0 to P1.4) Diagram

Table 6-45. Port P1 (P1.0 to P1.4) Pin Functions

PIN NAME (P1.x)	x	FUNCTION	CONTROL BITS OR SIGNALS			
			P1DIR.x	P1SEL.x	P1MAPx	LCDS18 to LCDS22 (1)
P1.0/P1MAP/S18	0	P1.0 (I/O)	I: 0; O: 1	0	X	0
		Mapped secondary digital function (see Table 6-6)	0; 1 (2)	1	≤ 30 (2)	0
		Output driver and input Schmitt trigger disabled	X	1	= 31	0
		S18 (not available on CC430F514x and CC430F512x)	X	X	X	1
P1.1/P1MAP1/S19	1	P1.1 (I/O)	I: 0; O: 1	0	X	0
		Mapped secondary digital function (see Table 6-6)	0; 1 (2)	1	≤ 30 (2)	0
		Output driver and input Schmitt trigger disabled	X	1	= 31	0
		S19 (not available on CC430F514x and CC430F512x)	X	X	X	1
P1.2/P1MAP2/S20	2	P1.2 (I/O)	I: 0; O: 1	0	X	0
		Mapped secondary digital function (see Table 6-6)	0; 1 (2)	1	≤ 30 (2)	0
		Output driver and input Schmitt trigger disabled	X	1	= 31	0
		S22 (not available on CC430F514x and CC430F512x)	X	X	X	1
P1.3/P1MAP3/S21	3	P1.3 (I/O)	I: 0; O: 1	0	X	0
		Mapped secondary digital function (see Table 6-6)	0; 1 (2)	1	≤ 30 (2)	0
		Output driver and input Schmitt trigger disabled	X	1	= 31	0
		S21 (not available on CC430F514x and CC430F512x)	X	X	X	1
P1.4/P1MAP4/S22	4	P1.4 (I/O)	I: 0; O: 1	0	X	0
		Mapped secondary digital function (see Table 6-6)	0; 1 (2)	1	≤ 30 (2)	0
		Output driver and input Schmitt trigger disabled	X	1	= 31	0
		S22 (not available on CC430F514x and CC430F512x)	X	X	X	1

(1) LCDSx not available in CC430F514x and CC430F512x.
(2) According to mapped function (see Table 6-6)

Copyright © 2012–2018, Texas Instruments Incorporated

6.12.2 Port P1 (P1.5 to P1.7) Input/Output With Schmitt Trigger

Figure 6-3 shows the port diagram. Table 6-46 summarizes the selection of the pin functions.

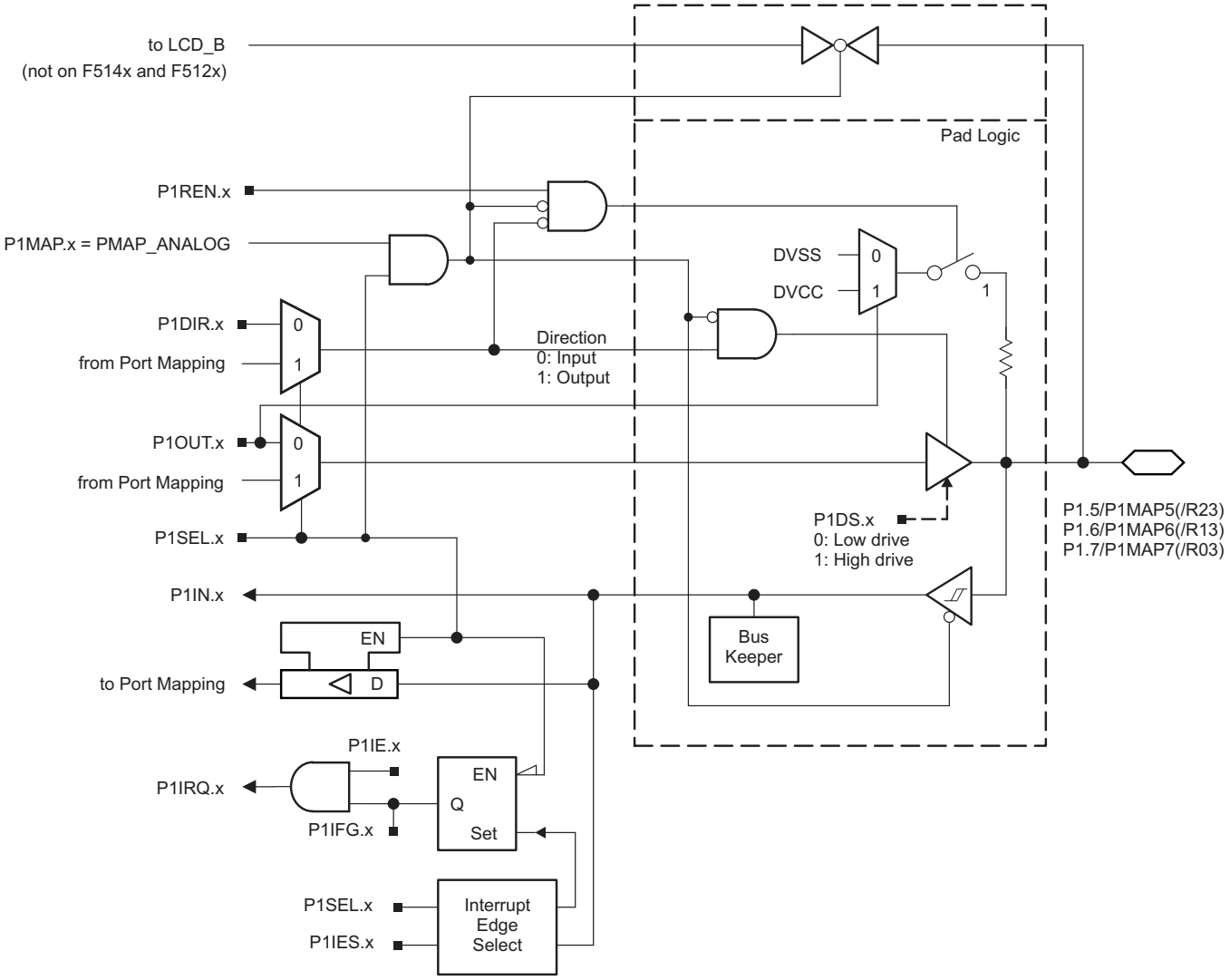

NOTE: CC430F514x and CC430F512x devices do not provide LCD functionality.

Figure 6-3. Port P1 (P1.5 to P1.7) Diagram

Table 6-46. Port P1 (P1.5 to P1.7) Pin Functions

PIN NAME (P1.x)	x	FUNCTION	CONTROL BITS OR SIGNALS		
			P1DIR.x	P1SEL.x	P1MAPx
P1.5/P1MAP5/R23	5	P1.5 (I/O)	I: 0; O: 1	0	X
		Mapped secondary digital function (see Table 6-6)	0; 1 (1)	1	≤ 30 (1)
		R23 (2) (not available on CC430F514x and CC430F512x)	X	1	= 31
P1.6/P1MAP6/R13/ LCDREF	6	P1.6 (I/O)	I: 0; O: 1	0	X
		Mapped secondary digital function (see Table 6-6)	0; 1 (1)	1	≤ 30 (1)
		R13/LCDREF (2) (not available on CC430F514x and CC430F512x)	X	1	= 31
P1.7/P1MAP7/R03	7	P1.7 (I/O)	I: 0; O: 1	0	X
		Mapped secondary digital function (see Table 6-6)	0; 1 (1)	1	≤ 30 (1)
		R03 (2) (not available on CC430F514x and CC430F512x)	X	1	= 31

(1) According to mapped function (see Table 6-6)
(2) Setting P1SEL.x bit together with P1MAPx = PM_ANALOG disables the output driver and the input Schmitt trigger.

Copyright © 2012–2018, Texas Instruments Incorporated

6.12.3 Port P2 (P2.0 to P2.7) Input/Output With Schmitt Trigger

Figure 6-4 through Figure 6-7 show the port diagrams. Table 6-47 summarizes the selection of the pin functions.

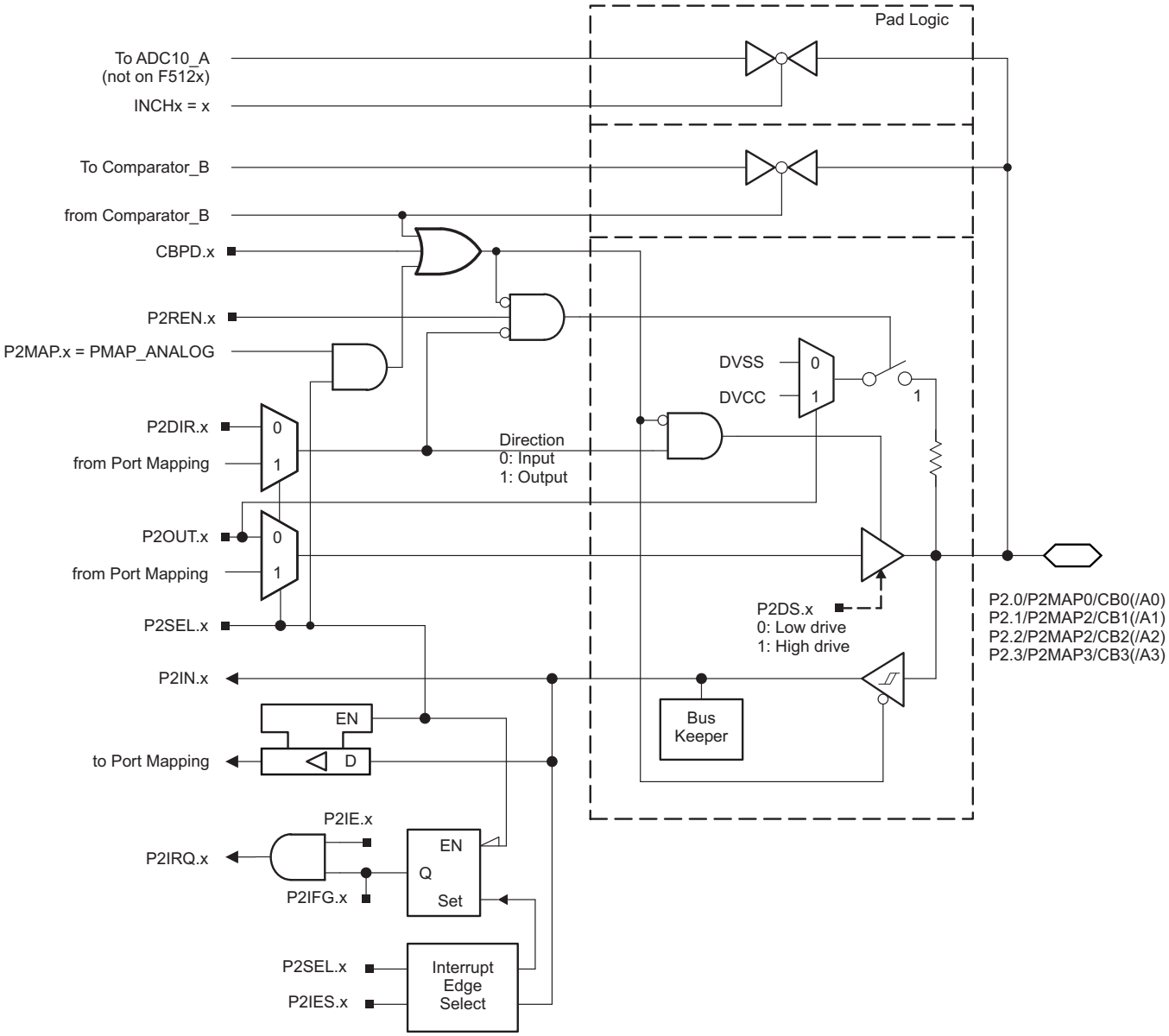

Figure 6-4. Port P2 (P2.0 to P2.3) Diagram

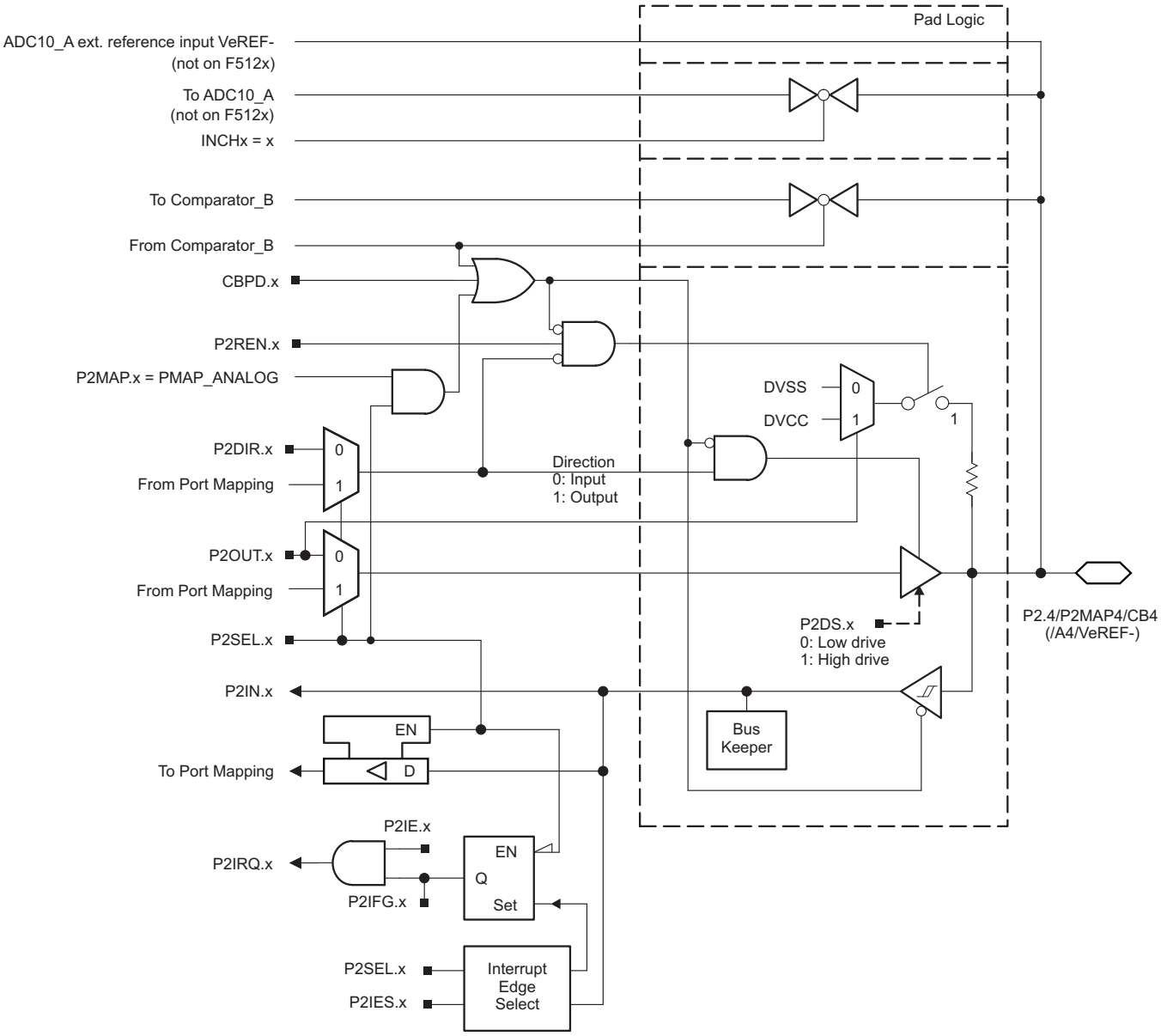

Figure 6-5. Port P2 (P2.4) Diagram

Copyright © 2012–2018, Texas Instruments Incorporated

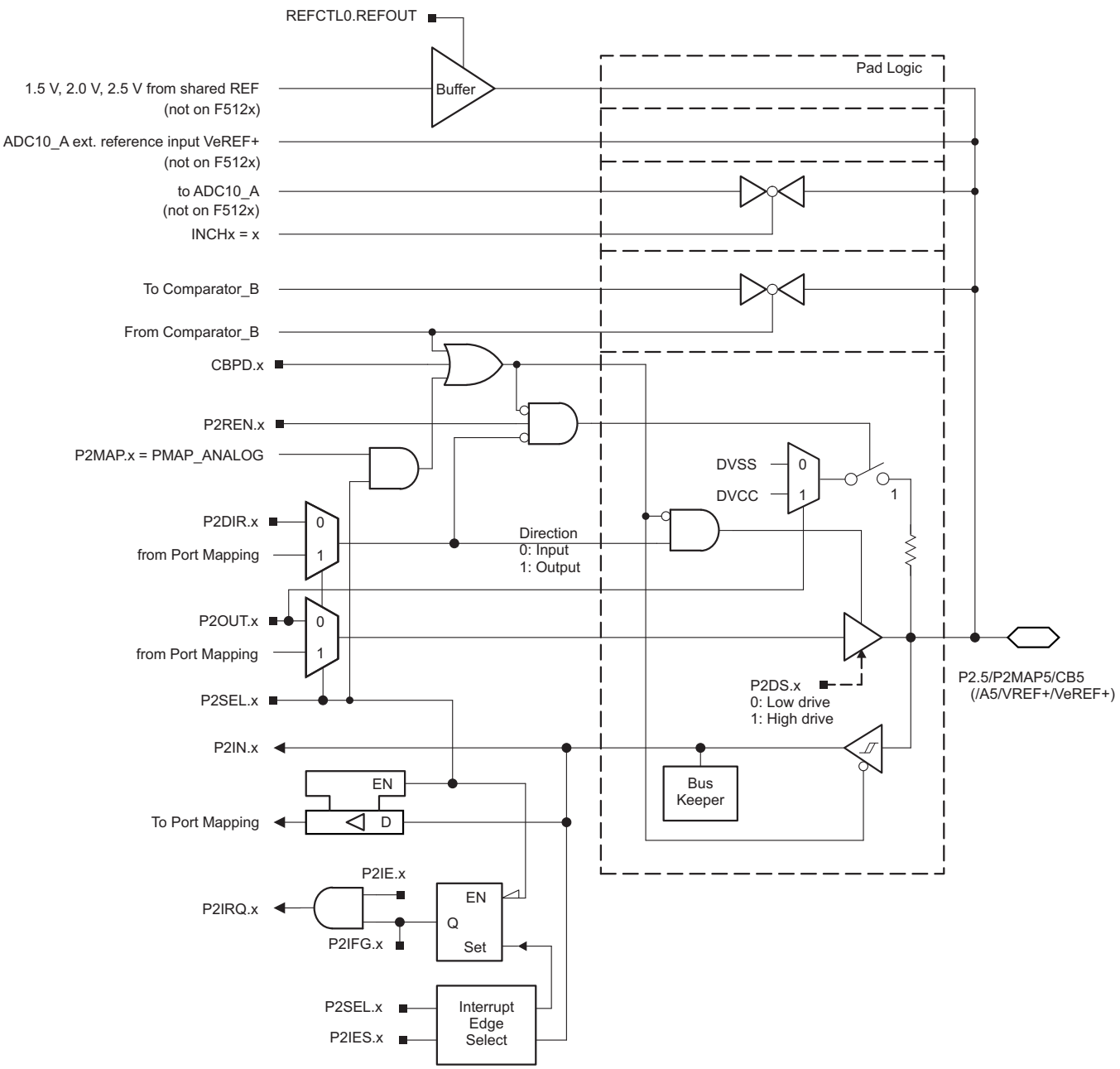

Figure 6-6. Port P2 (P2.5) Diagram

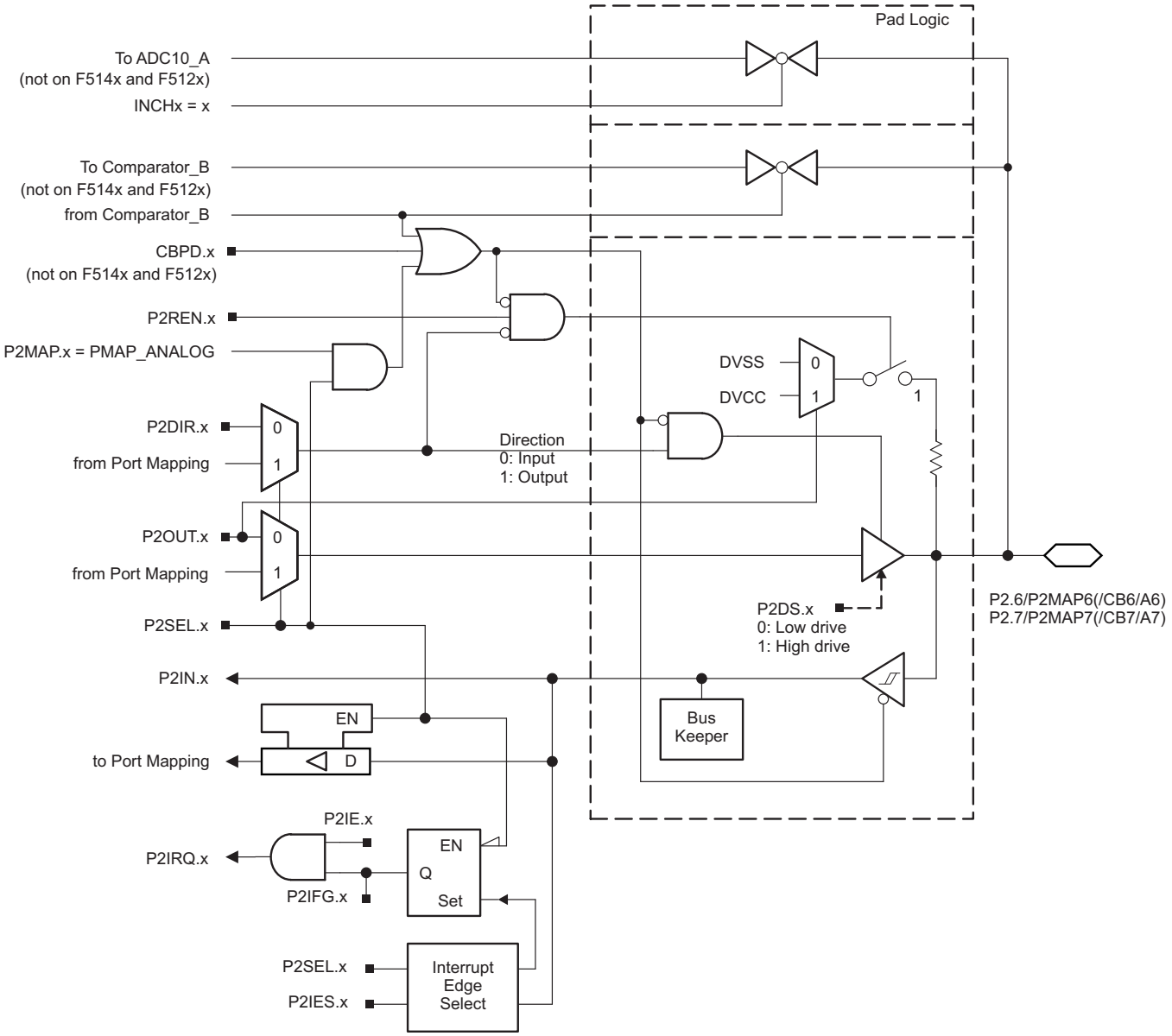

CC430F514x and CC430F512x devices do not provide analog functionality on port P2.6 and P2.7 pins.

Figure 6-7. Port P2 (P2.6 and P2.7) Diagram

Copyright © 2012–2018, Texas Instruments Incorporated

Table 6-47. Port P2 (P2.0 to P2.7) Pin Functions

PIN NAME (P2.x)	x	FUNCTION	CONTROL BITS OR SIGNALS			
			P2DIR.x	P2SEL.x	P2MAPx	CBPD.x
P2.0/P2MAP0/CB0 (/A0)	0	P2.0 (I/O)	I: 0; O: 1	0	X	0
		Mapped secondary digital function (see Table 6-6)	0; 1 (1)	1	≤ 30 (1)	0
		A0 (not available on CC430F512x) (2)	X	1	= 31	X
		CB0 (3)	X	X	X	1
P2.1/P2MAP1/CB1 (/A1)	1	P2.1 (I/O)	I: 0; O: 1	0	X	0
		Mapped secondary digital function (see Table 6-6)	0; 1 (1)	1	≤ 30 (1)	0
		A1 (not available on CC430F512x) (2)	X	1	= 31	X
		CB1 (3)	X	X	X	1
P2.2/P2MAP2/CB2 (/A2)	2	P2.2 (I/O)	I: 0; O: 1	0	X	0
		Mapped secondary digital function (see Table 6-6)	0; 1 (1)	1	≤ 30 (1)	0
		A2 (not available on CC430F512x) (2)	X	1	= 31	X
		CB2 (3)	X	X	X	1
P2.3/P2MAP3/CB3 (/A3)	3	P2.3 (I/O)	I: 0; O: 1	0	X	0
		Mapped secondary digital function (see Table 6-6)	0; 1 (1)	1	≤ 30 (1)	0
		A3 (not available on CC430F512x) (2)	X	1	= 31	X
		CB3 (3)	X	X	X	1
P2.4/P2MAP4/CB4 (/A4/VeREF-)	4	P2.4 (I/O)	I: 0; O: 1	0	X	0
		Mapped secondary digital function (see Table 6-6)	0; 1 (1)	1	≤ 30 (1)	0
		A4/VeREF- (not available on CC430F512x) (2)	X	1	= 31	X
		CB4 (3)	X	X	X	1
P2.5/P2MAP5/CB5 (/A5/VREF+/VeREF+)	5	P2.5 (I/O)	I: 0; O: 1	0	X	0
		Mapped secondary digital function (see Table 6-6)	0; 1 (1)	1	≤ 30 (1)	0
		A5/VREF+VeREF+ (not available on CC430F512x) (2)	X	1	= 31	X
		CB5 (3)	X	X	X	1
P2.6/P2MAP6(/CB6) (/A6)	6	P2.6 (I/O)	I: 0; O: 1	0	X	0
		Mapped secondary digital function (see Table 6-6)	0; 1 (1)	1	≤ 30 (1)	0
		A6 (not available on CC430F514x and CC430F512x) (2)	X	1	= 31	X
		CB6 (not available on CC430F514x and CC430F512x) (3)	X	X	X	1
P2.7/P2MAP7(/CB7) (/A7)	7	P2.7 (I/O)	I: 0; O: 1	0	X	0
		Mapped secondary digital function (see Table 6-6)	0; 1 (1)	1	≤ 30 (1)	0
		A7 (not available on CC430F514x and CC430F512x) (2)	X	1	= 31	X
		CB7 (not available on CC430F514x and CC430F512x) (3)	X	X	X	1

(1) According to mapped function (see Table 6-6)
(2) Setting P2SEL.x bit together with P2MAPx = PM_ANALOG disables the output driver and the input Schmitt trigger.
(3) Setting the CBPD.x bit disables the output driver and the input Schmitt trigger to prevent parasitic cross currents when applying analog signals. Selecting the CBx input pin to the comparator multiplexer with the CBx bits automatically disables output driver and input buffer for that pin, regardless of the state of the associated CBPD.x bit.

6.12.4 Port P3 (P3.0 to P3.7) Input/Output With Schmitt Trigger

Figure 6-8 shows the port diagram. Table 6-48 summarizes the selection of the pin functions.

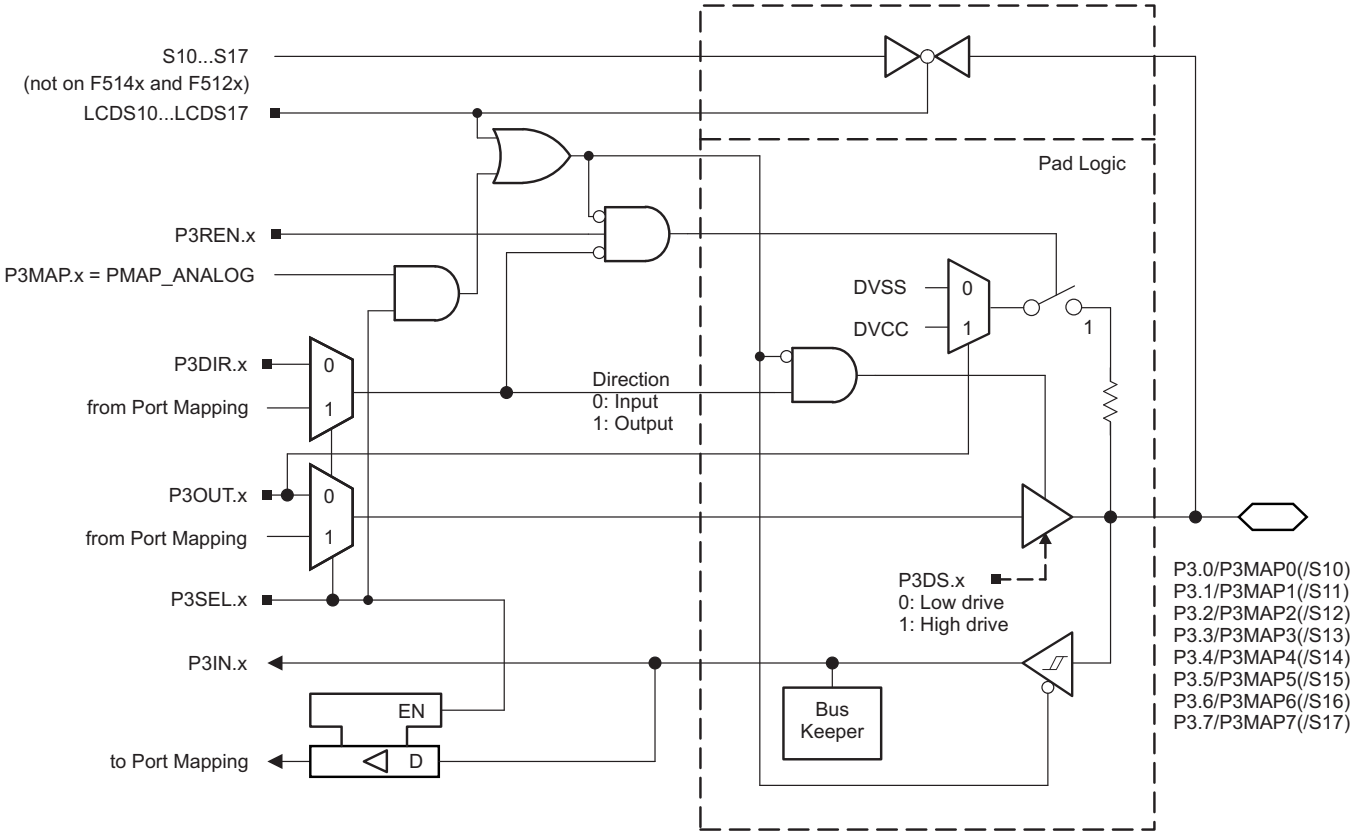

CC430F514x and CC430F512x devices do not provide LCD functionality.

Figure 6-8. Port P3 (P3.0 to P3.7) Diagram

Copyright © 2012–2018, Texas Instruments Incorporated

Table 6-48. Port P3 (P3.0 to P3.7) Pin Functions

PIN NAME (P3.x)	x	FUNCTION	CONTROL BITS OR SIGNALS			
			P3DIR.x	P3SEL.x	P3MAPx	LCDS10 to LCDS17[(1)]
P3.0/P3MAP0/S10	0	P3.0 (I/O)	I: 0; O: 1	0	X	0
		Mapped secondary digital function (see Table 6-6)	0; 1[(2)]	1	≤ 30[(2)]	0
		Output driver and input Schmitt trigger disabled	X	1	= 31	0
		S10 (not available on CC430F514x and CC430F512x)	X	X	X	1
P3.1/P3MAP1/S11	1	P3.1 (I/O)	I: 0; O: 1	0	X	0
		Mapped secondary digital function (see Table 6-6)	0; 1[(2)]	1	≤ 30[(2)]	0
		Output driver and input Schmitt trigger disabled	X	1	= 31	0
		S11 (not available on CC430F514x and CC430F512x)	X	X	X	1
P3.2/P3MAP7/S12	2	P3.2 (I/O)	I: 0; O: 1	0	X	0
		Mapped secondary digital function (see Table 6-6)	0; 1[(2)]	1	≤ 30[(2)]	0
		Output driver and input Schmitt trigger disabled	X	1	= 31	0
		S12 (not available on CC430F514x and CC430F512x)	X	X	X	1
P3.3/P3MAP3/S13	3	P3.3 (I/O)	I: 0; O: 1	0	X	0
		Mapped secondary digital function (see Table 6-6)	0; 1[(2)]	1	≤ 30[(2)]	0
		Output driver and input Schmitt trigger disabled	X	1	= 31	0
		S13 (not available on CC430F514x and CC430F512x)	X	X	X	1
P3.4/P3MAP4/S14	4	P3.4 (I/O)	I: 0; O: 1	0	X	0
		Mapped secondary digital function (see Table 6-6)	0; 1[(2)]	1	≤ 30[(2)]	0
		Output driver and input Schmitt trigger disabled	X	1	= 31	0
		S14 (not available on CC430F514x and CC430F512x)	X	X	X	1
P3.5/P3MAP5/S15	5	P3.5 (I/O)	I: 0; O: 1	0	X	0
		Mapped secondary digital function (see Table 6-6)	0; 1[(2)]	1	≤ 30[(2)]	0
		Output driver and input Schmitt trigger disabled	X	1	= 31	0
		S15 (not available on CC430F514x and CC430F512x)	X	X	X	1
P3.6/P3MAP6/S16	6	P3.6 (I/O)	I: 0; O: 1	0	X	0
		Mapped secondary digital function (see Table 6-6)	0; 1[(2)]	1	≤ 30[(2)]	0
		Output driver and input Schmitt trigger disabled	X	1	= 31	0
		S16 (not available on CC430F514x and CC430F512x)	X	X	X	1
P3.7/P3MAP7/S17	7	P3.7 (I/O)	I: 0; O: 1	0	X	0
		Mapped secondary digital function (see Table 6-6)	0; 1[(2)]	1	≤ 30[(2)]	0
		Output driver and input Schmitt trigger disabled	X	1	= 31	0
		S17 (not available on CC430F514x and CC430F512x)	X	X	X	1

(1) LCDSx not available in CC430F514x and CC430F512x.
(2) According to mapped function (see Table 6-6)

6.12.5 Port P4 (P4.0 to P4.7) Input/Output With Schmitt Trigger (CC430F614x Only)

Figure 6-9 shows the port diagram. Table 6-49 summarizes the selection of the pin functions.

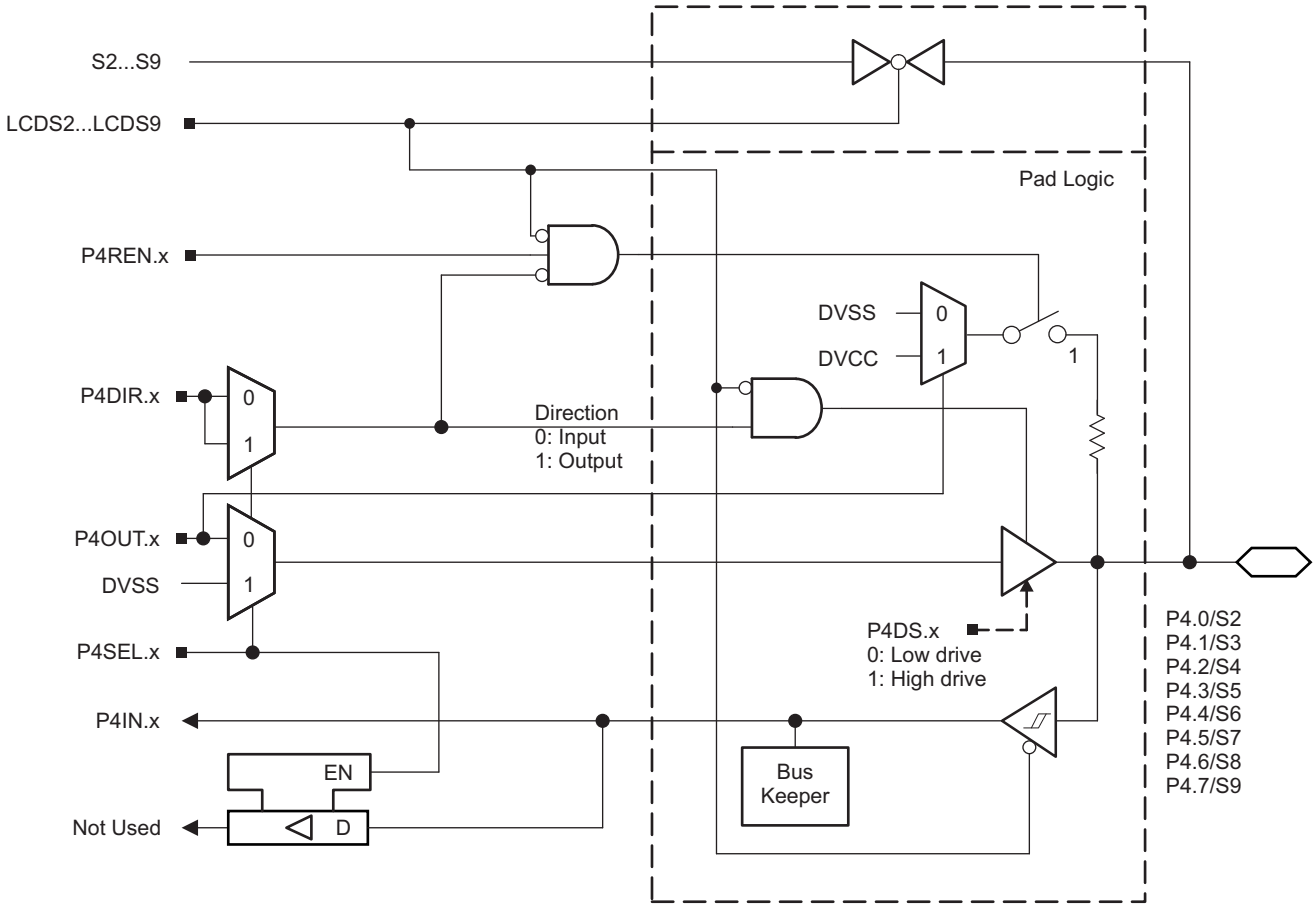

Figure 6-9. Port P4 (P4.0 to P4.7) Diagram (CC430F614x Only)

Copyright © 2012–2018, Texas Instruments Incorporated

Table 6-49. Port P4 (P4.0 to P4.7) Pin Functions (CC430F614x Only)

PIN NAME (P4.x)	x	FUNCTION	CONTROL BITS OR SIGNALS		
			P4DIR.x	P4SEL.x	LCDS2 to LCDS9
P4.0/P4MAP0/S2	0	P4.0 (I/O)	I: 0; O: 1	0	0
		N/A	0	1	0
		DVSS	1	1	0
		S2	X	X	1
P4.1/P4MAP1/S3	1	P4.1 (I/O)	I: 0; O: 1	0	0
		N/A	0	1	0
		DVSS	1	1	0
		S3	X	X	1
P4.2/P4MAP7/S4	2	P4.2 (I/O)	I: 0; O: 1	0	0
		N/A	0	1	0
		DVSS	1	1	0
		S4	X	X	1
P4.3/P4MAP3/S5	3	P4.3 (I/O)	I: 0; O: 1	0	0
		N/A	0	1	0
		DVSS	1	1	0
		S5	X	X	1
P4.4/P4MAP4/S6	4	P4.4 (I/O)	I: 0; O: 1	0	0
		N/A	0	1	0
		DVSS	1	1	0
		S6	X	X	1
P4.5/P4MAP5/S7	5	P4.5 (I/O)	I: 0; O: 1	0	0
		N/A	0	1	0
		DVSS	1	1	0
		S7	X	X	1
P4.6/P4MAP6/S8	6	P4.6 (I/O)	I: 0; O: 1	0	0
		N/A	0	1	0
		DVSS	1	1	0
		S8	X	X	1
P4.7/P4MAP7/S9	7	P4.7 (I/O)	I: 0; O: 1	0	0
		N/A	0	1	0
		DVSS	1	1	0
		S9	X	X	1

Copyright © 2012–2018, Texas Instruments Incorporated

6.12.6 Port P5 (P5.0 and P5.1) Input/Output With Schmitt Trigger

Figure 6-10 and Figure 6-11 show the port diagrams. Table 6-50 summarizes the selection of the pin functions.

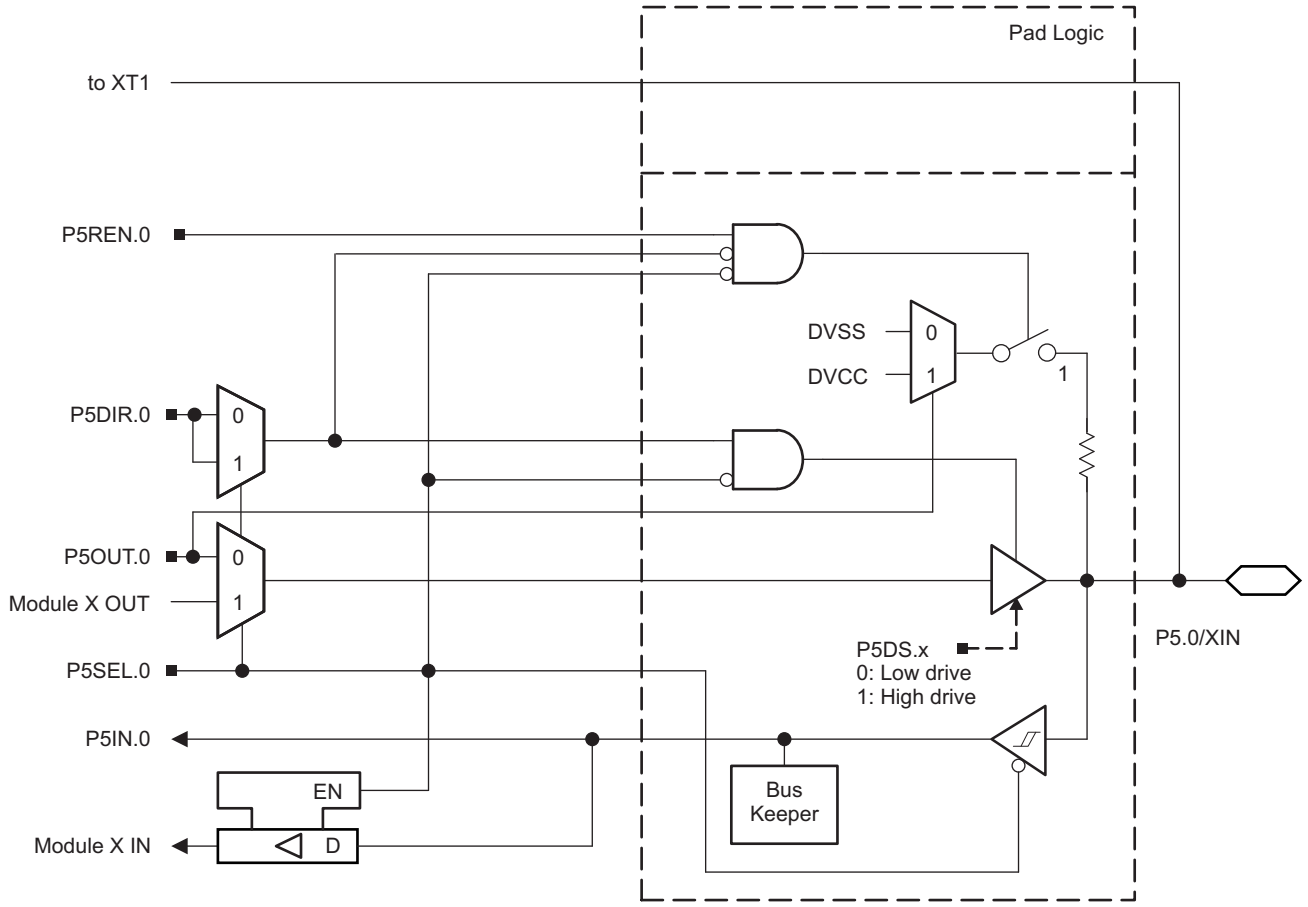

Figure 6-10. Port P5 (P5.0) Diagram

Copyright © 2012–2018, Texas Instruments Incorporated

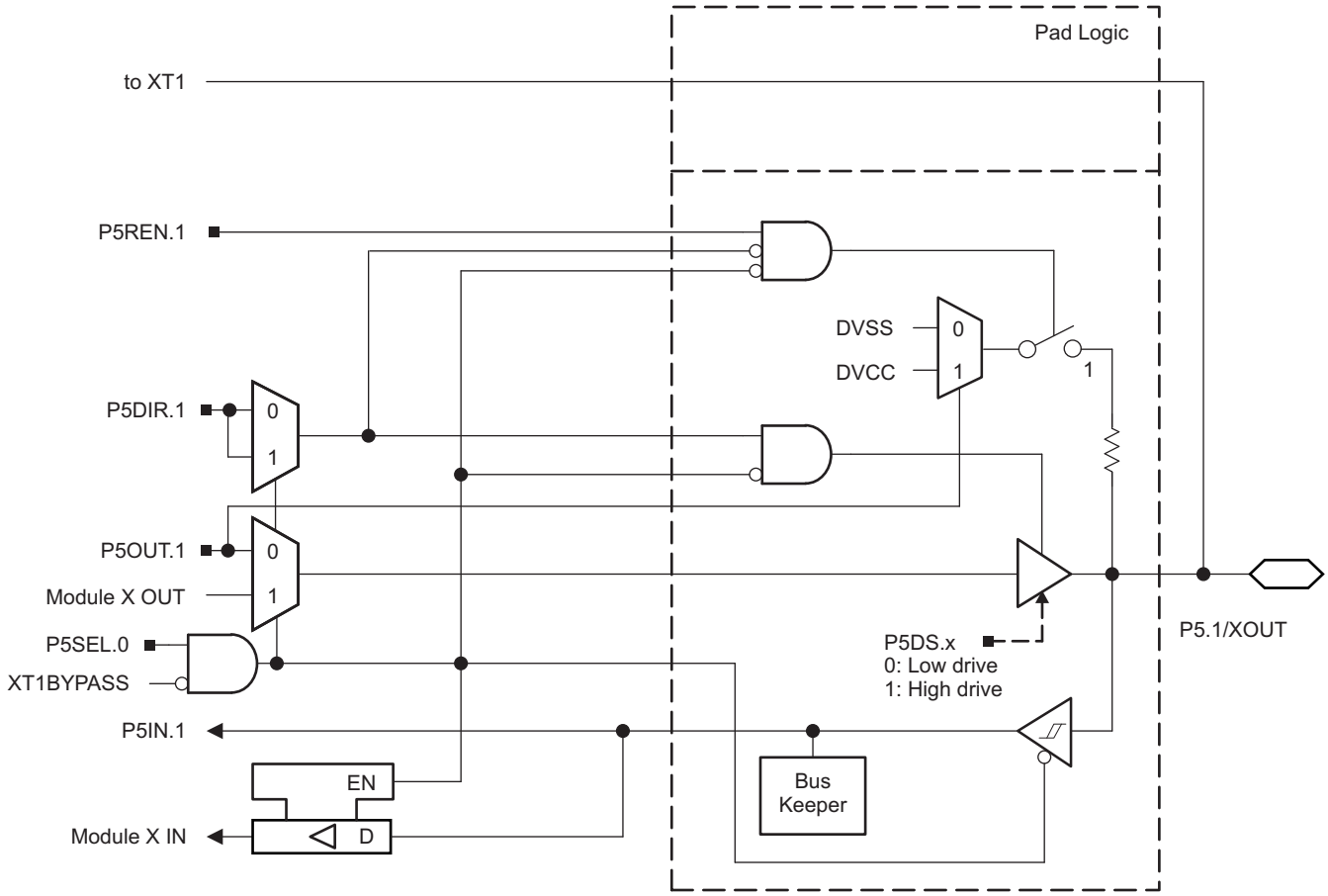

Figure 6-11. Port P5 (P5.1) Diagram

Table 6-50. Port P5 (P5.0 and P5.1) Pin Functions

PIN NAME (P5.x)	x	FUNCTION	CONTROL BITS OR SIGNALS(1)			
			P5DIR.x	P5SEL.0	P5SEL.1	XT1BYPASS
P5.0/XIN	0	P5.0 (I/O)	I: 0; O: 1	0	X	X
		XIN crystal mode(2)	X	1	X	0
		XIN bypass mode(2)	X	1	X	1
P5.1/XOUT	1	P5.1 (I/O)	I: 0; O: 1	0	X	X
		XOUT crystal mode(3)	X	1	X	0
		P5.1 (I/O)(3)	X	1	X	1

(1) X = Don't care
(2) Setting P5SEL.0 causes the general-purpose I/O to be disabled. Pending the setting of XT1BYPASS, P5.0 is configured for crystal mode or bypass mode.
(3) Setting P5SEL.0 causes the general-purpose I/O to be disabled in crystal mode. When using bypass mode, P5.1 can be used as general-purpose I/O.

6.12.7 Port P5 (P5.2 to P5.4) Input/Output With Schmitt Trigger (CC430F614x Only)

Figure 6-12 shows the port diagram. Table 6-51 and Table 6-52 summarize the selection of the pin functions.

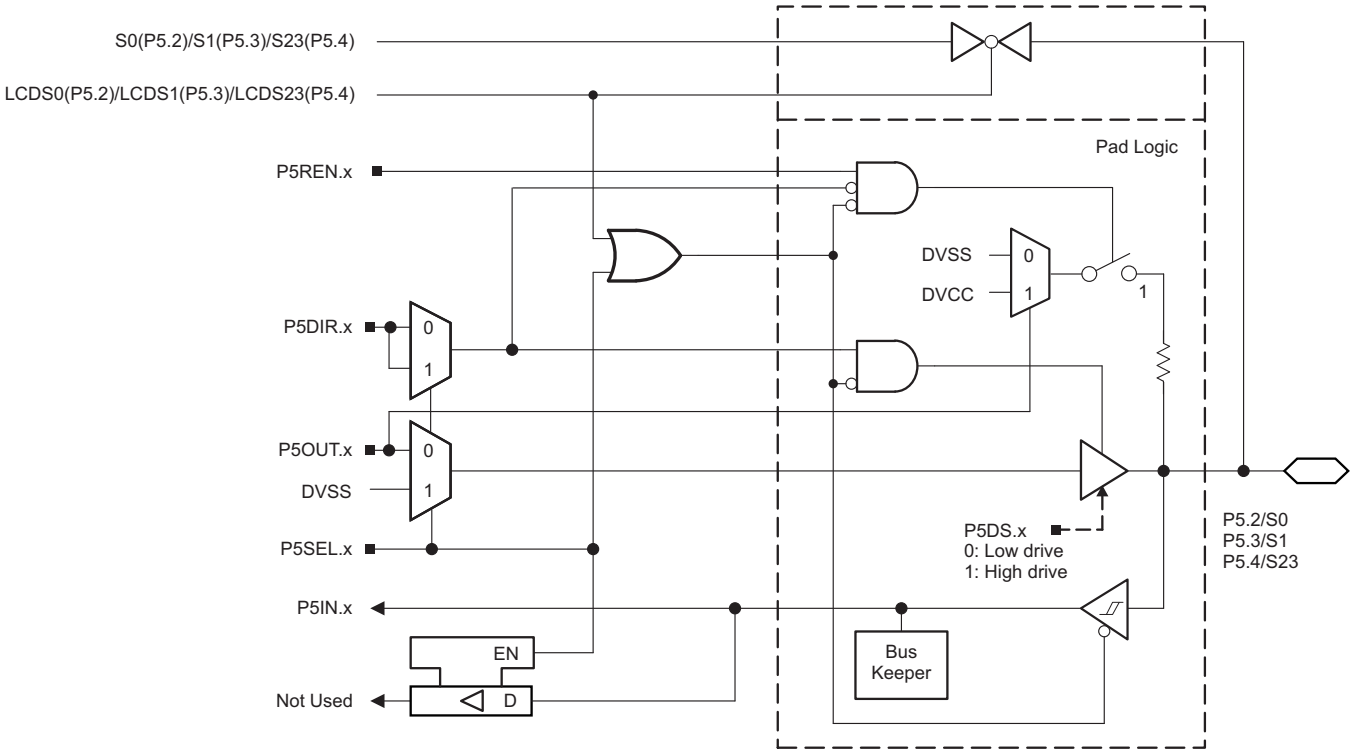

Figure 6-12. Port P5 (P5.2 to P5.4) Diagram (CC430F614x Only)

Table 6-51. Port P5 (P5.2 to P5.3) Pin Functions (CC430F614x Only)

PIN NAME (P5.x)	x	FUNCTION	CONTROL BITS OR SIGNALS		
			P5DIR.x	P5SEL.x	LCDS0 or LCDS1
P5.2/S0	2	P5.2 (I/O)	I: 0; O: 1	0	0
		N/A	0	1	0
		DVSS	1	1	0
		S0	X	X	1
P5.3/S1	3	P5.3 (I/O)	I: 0; O: 1	0	0
		N/A	0	1	0
		DVSS	1	1	0
		S1	X	X	1

Table 6-52. Port P5 (P5.4) Pin Functions (CC430F614x Only)

PIN NAME (P5.x)	x	FUNCTION	CONTROL BITS OR SIGNALS		
			P5DIR.x	P5SEL.x	LCDS23
P5.4/S23	4	P5.4 (I/O)	I: 0; O: 1	0	0
		N/A	0	1	0
		DVSS	1	1	0
		S23	X	X	1

Copyright © 2012–2018, Texas Instruments Incorporated

6.12.8 Port P5 (P5.5 to P5.7) Input/Output With Schmitt Trigger (CC430F614x Only)

Figure 6-13 shows the port diagram. Table 6-53 summarizes the selection of the pin functions.

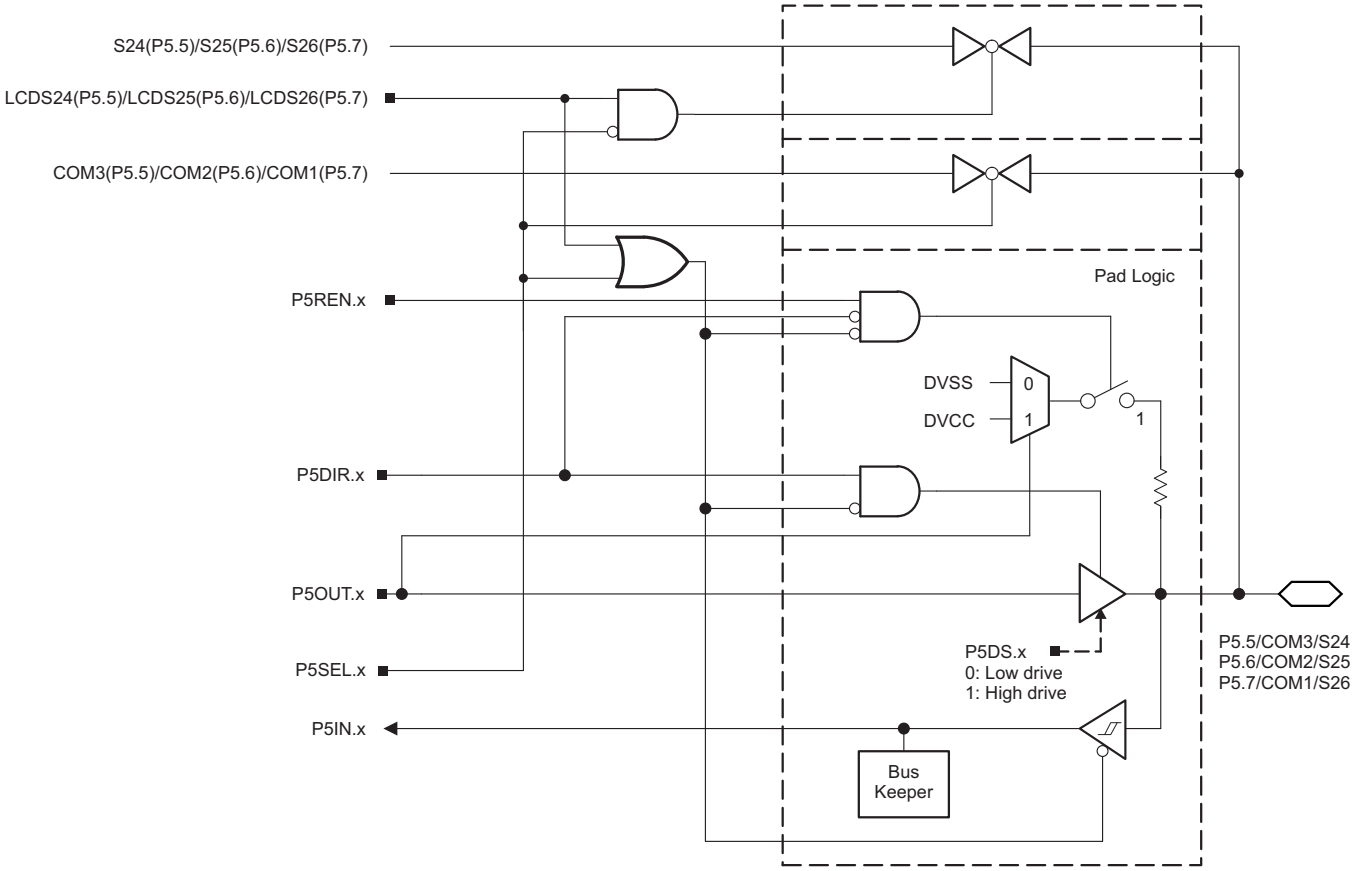

Figure 6-13. Port P5 (P5.5 to P5.7) Diagram (CC430F614x Only)

Table 6-53. Port P5 (P5.5 to P5.7) Pin Functions (CC430F614x Only)

PIN NAME (P5.x)	x	FUNCTION	CONTROL BITS OR SIGNALS		
			P5DIR.x	P5SEL.x	LCDS24 to LCDS26
P5.5/COM3/S24	5	P5.5 (I/O)	I: 0; O: 1	0	0
		COM3 (1)	X	1	X
		S24 (1)	X	0	1
P5.6/COM2/S25	6	P5.6 (I/O)	I: 0; O: 1	0	0
		COM2 (1)	X	1	X
		S25 (1)	X	0	1
P5.7/COM1/S26	7	P5.7 (I/O)	I: 0; O: 1	0	0
		COM1 (1)	X	1	X
		S26 (1)	X	0	1

(1) Setting P5SEL.x bit disables the output driver and the input Schmitt trigger.

6.12.9 Port PJ (PJ.0) JTAG Pin TDO, Input/Output With Schmitt Trigger or Output

Figure 6-14 shows the port diagram. Table 6-54 summarizes the selection of the pin functions.

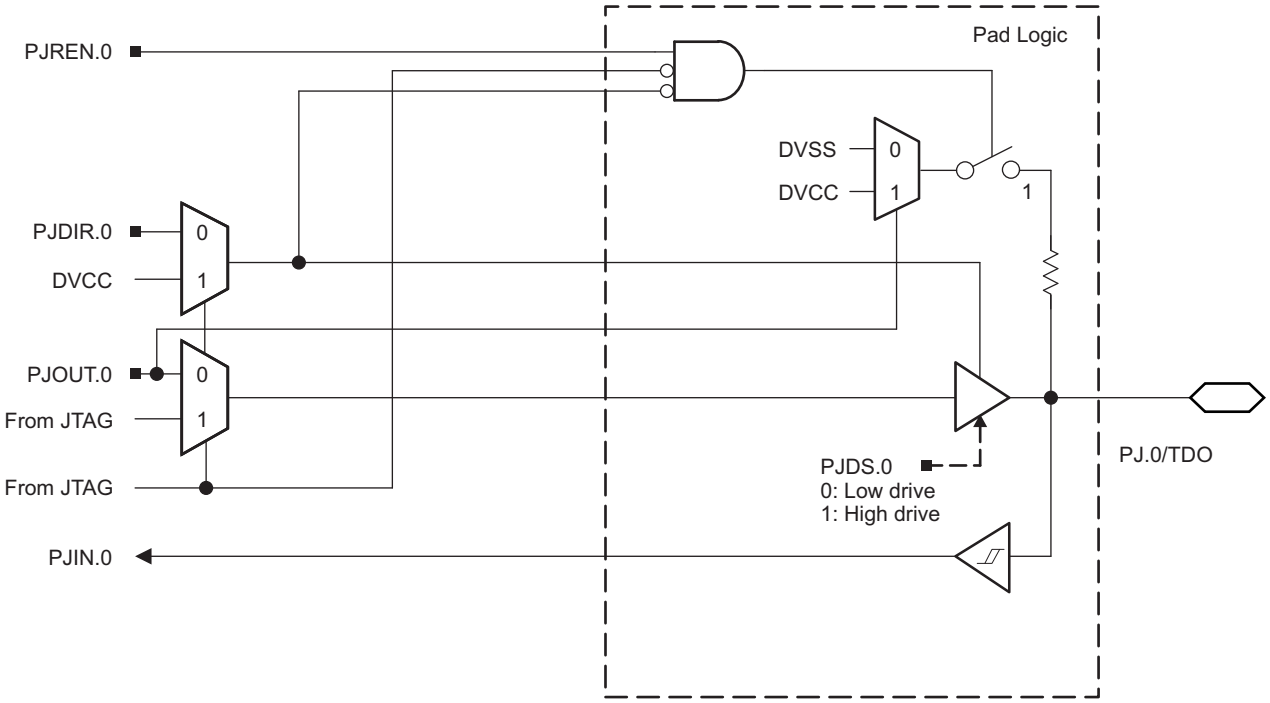

Figure 6-14. Port PJ (PJ.0) Diagram

Copyright © 2012–2018, Texas Instruments Incorporated

6.12.10 Port PJ (PJ.1 to PJ.3) JTAG Pins TMS, TCK, TDI/TCLK, Input/Output With Schmitt Trigger or Output

Figure 6-15 shows the port diagram. Table 6-54 summarizes the selection of the pin functions.

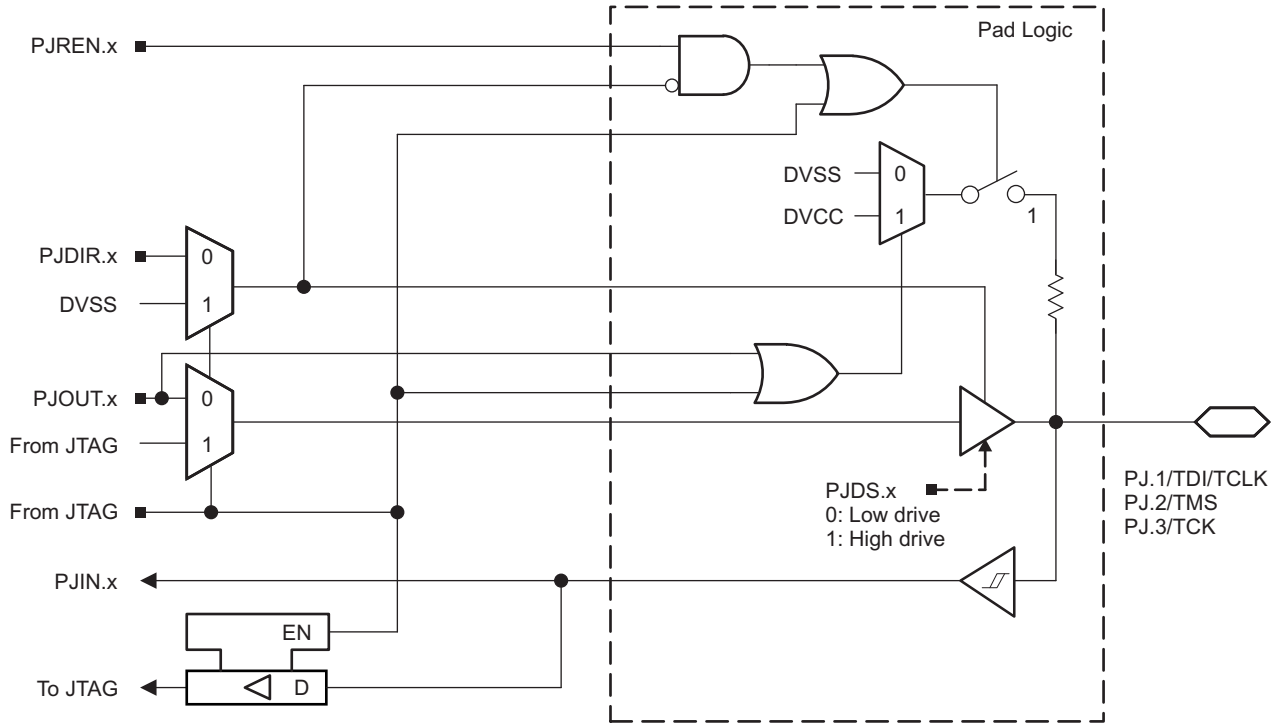

Figure 6-15. Port PJ (PJ.1 to PJ.3) Diagram

Table 6-54. Port PJ (PJ.0 to PJ.3) Pin Functions

PIN NAME (PJ.x)	x	FUNCTION	CONTROL BITS OR SIGNALS(1)
			PJDIR.x
PJ.0/TDO	0	PJ.0 (I/O)(2)	I: 0; O: 1
		TDO(3)	X
PJ.1/TDI/TCLK	1	PJ.1 (I/O)(2)	I: 0; O: 1
		TDI/TCLK(3) (4)	X
PJ.2/TMS	2	PJ.2 (I/O)(2)	I: 0; O: 1
		TMS(3) (4)	X
PJ.3/TCK	3	PJ.3 (I/O)(2)	I: 0; O: 1
		TCK(3) (4)	X

(1) X = Don't care
(2) Default condition
(3) The pin direction is controlled by the JTAG module.
(4) In JTAG mode, pullups are activated automatically on TMS, TCK, and TDI/TCLK. PJREN.x are don't care.

6.13 Device Descriptor Structure

Table 6-55 lists the content of the device descriptor tag-length-value (TLV) structure for CC430F614x and CC430F514x device types.

Table 6-56 lists the content of the device descriptor tag-length-value (TLV) structure for CC430F512x device types.

Table 6-55. Device Descriptor (CC430F614x and CC430F514x)

DESCRIPTION		ADDRESS	SIZE (bytes)	VALUE					
				F6147	F6145	F6143	F5147	F5145	F5143
Info Block	Info length	01A00h	1	06h	06h	06h	06h	06h	06h
	CRC length	01A01h	1	06h	06h	06h	06h	06h	06h
	CRC value	01A02h	2	Per unit	Per unit	Per unit	Per unit	Per unit	Per unit
	Device ID	01A04h	1	035h	036h	037h	038h	039h	03Ah
	Device ID	01A05h	1	081h	081h	081h	081h	081h	081h
	Hardware revision	01A06h	1	Per unit	Per unit	Per unit	Per unit	Per unit	Per unit
	Firmware revision	01A07h	1	Per unit	Per unit	Per unit	Per unit	Per unit	Per unit
Die Record	Die record tag	01A08h	1	08h	08h	08h	08h	08h	08h
	Die record length	01A09h	1	0Ah	0Ah	0Ah	0Ah	0Ah	0Ah
	Lot/wafer ID	01A0Ah	4	Per unit	Per unit	Per unit	Per unit	Per unit	Per unit
	Die X position	01A0Eh	2	Per unit	Per unit	Per unit	Per unit	Per unit	Per unit
	Die Y position	01A10h	2	Per unit	Per unit	Per unit	Per unit	Per unit	Per unit
	Test results	01A12h	2	Per unit	Per unit	Per unit	Per unit	Per unit	Per unit
ADC10 Calibration	ADC10 calibration Tag	01A14h	1	13h	13h	13h	13h	13h	13h
	ADC10 calibration length	01A15h	1	10h	10h	10h	10h	10h	10h
	ADC gain factor	01A16h	2	Per unit	Per unit	Per unit	Per unit	Per unit	Per unit
	ADC offset	01A18h	2	Per unit	Per unit	Per unit	Per unit	Per unit	Per unit
	ADC 1.5-V reference Temperature sensor 30°C	01A1Ah	2	Per unit	Per unit	Per unit	Per unit	Per unit	Per unit
	ADC 1.5-V reference Temperature sensor 85°C	01A1Ch	2	Per unit	Per unit	Per unit	Per unit	Per unit	Per unit
	ADC 2.0-V reference Temperature sensor 30°C	01A1Eh	2	Per unit	Per unit	Per unit	Per unit	Per unit	Per unit
	ADC 2.0-V reference Temperature sensor 85°C	01A20h	2	Per unit	Per unit	Per unit	Per unit	Per unit	Per unit
	ADC 2.5-V reference Temperature sensor 30°C	01A22h	2	Per unit	Per unit	Per unit	Per unit	Per unit	Per unit
	ADC 2.5-V reference Temperature sensor 85°C	01A24h	2	Per unit	Per unit	Per unit	Per unit	Per unit	Per unit
REF Calibration	REF calibration tag	01A26h	1	12h	12h	12h	12h	12h	12h
	REF calibration length	01A27h	1	06h	06h	06h	06h	06h	06h
	1.5-V reference factor	01A28h	2	Per unit	Per unit	Per unit	Per unit	Per unit	Per unit
	2.0-V reference factor	01A2Ah	2	Per unit	Per unit	Per unit	Per unit	Per unit	Per unit
	2.5-V reference factor	01A2Ch	2	Per unit	Per unit	Per unit	Per unit	Per unit	Per unit
Peripheral Descriptor (PD)	Peripheral descriptor tag	01A2Eh	1	02h	02h	02h	02h	02h	02h
	Peripheral descriptor length	01A2Fh	1	5Dh	5Dh	5Dh	5Bh	5Bh	5Bh
	Peripheral descriptors	01A30h	PD Length	...	...	...	...	...	...

Copyright © 2012–2018, Texas Instruments Incorporated

Table 6-56. Device Descriptor Table CC430F512x

DESCRIPTION		ADDRESS	SIZE (bytes)	VALUE	
				F5125	F5123
Info Block	Info length	01A00h	1	06h	06h
	CRC length	01A01h	1	06h	06h
	CRC value	01A02h	2	Per unit	Per unit
	Device ID	01A04h	1	03Bh	03Ch
	Device ID	01A05h	1	081h	081h
	Hardware revision	01A06h	1	Per unit	Per unit
	Firmware revision	01A07h	1	Per unit	Per unit
Die Record	Die record tag	01A08h	1	08h	08h
	Die record length	01A09h	1	0Ah	0Ah
	Lot/wafer ID	01A0Ah	4	Per unit	Per unit
	Die X position	01A0Eh	2	Per unit	Per unit
	Die Y position	01A10h	2	Per unit	Per unit
	Test results	01A12h	2	Per unit	Per unit
Empty Descriptor	Empty tag	01A14h	1	05h	05h
	Empty tag length	01A15h	1	10h	10h
		01A16h	16	Undefined	Undefined
REF Calibration	REF calibration tag	01A26h	1	12h	12h
	REF calibration length	01A27h	1	06h	06h
	1.5-V reference factor	01A28h	2	Per unit	Per unit
	2.0-V reference factor	01A2Ah	2	Per unit	Per unit
	2.5-V reference factor	01A2Ch	2	Per unit	Per unit
Peripheral Descriptor (PD)	Peripheral descriptor tag	01A2Eh	1	02h	02h
	Peripheral descriptor length	01A2Fh	1	59h	59h
	Peripheral descriptors	01A30h	PD Length	...	...

7 Applications, Implementation, and Layout

NOTE

Information in the following Applications section is not part of the TI component specification, and TI does not warrant its accuracy or completeness. TI's customers are responsible for determining suitability of components for their purposes. Customers should validate and test their design implementation to confirm system functionality.

7.1 Application Circuits

Figure 7-1 shows a typical application circuit for the CC430F61xx. Table 7-1 lists the bill of materials.

Copyright © 2012–2018, Texas Instruments Incorporated

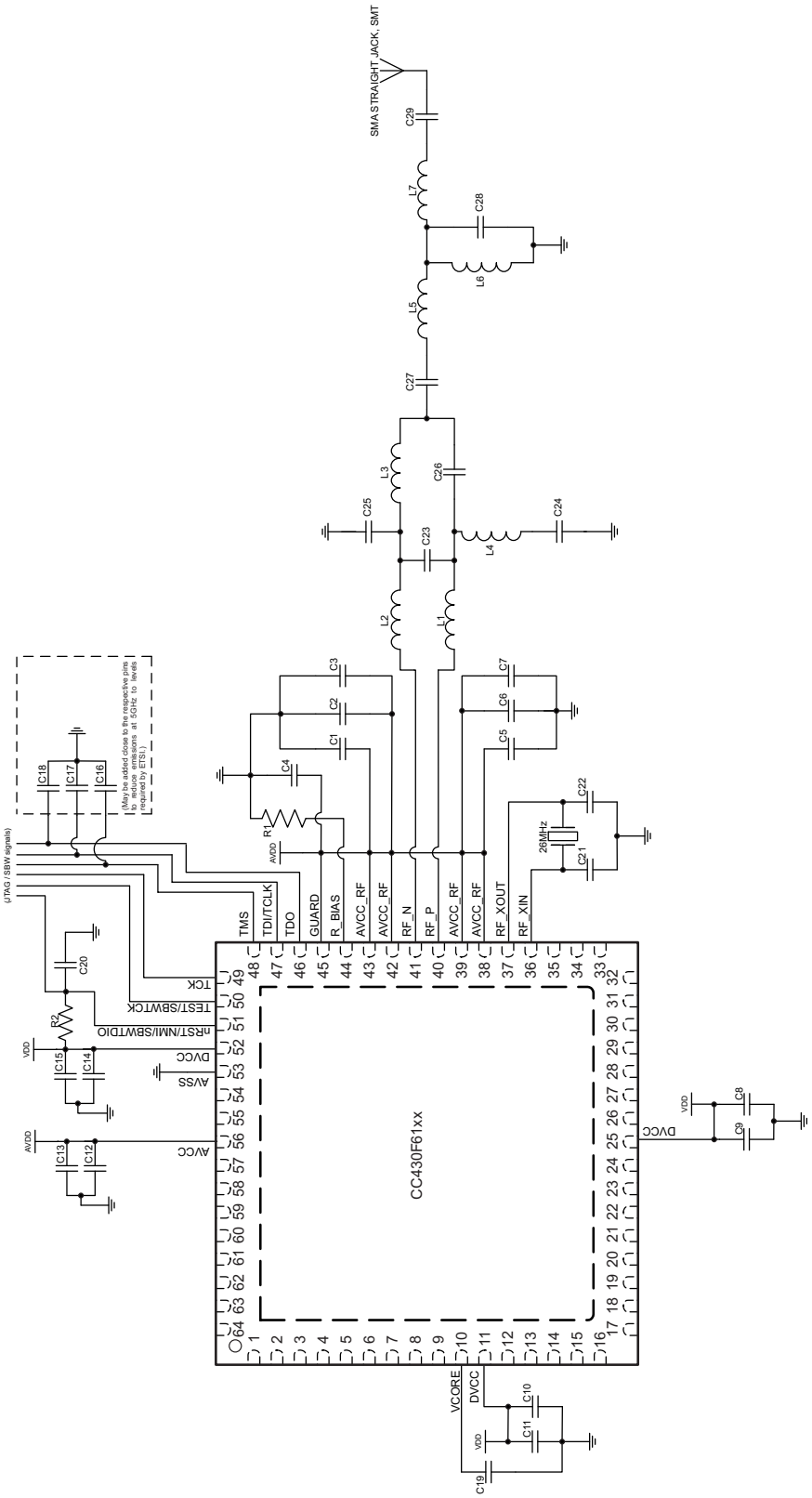

Copyright © 2017, Texas Instruments Incorporated

For a complete reference design including layout, see the CC430 wireless development tools, their related documentation, and the *MSP430 Hardware Tools User's Guide*.

Figure 7-1. Typical Application Circuit CC430F61xx

Figure 7-2 shows a typical application circuit for the CC430F51xx. Table 7-1 lists the bill of materials.

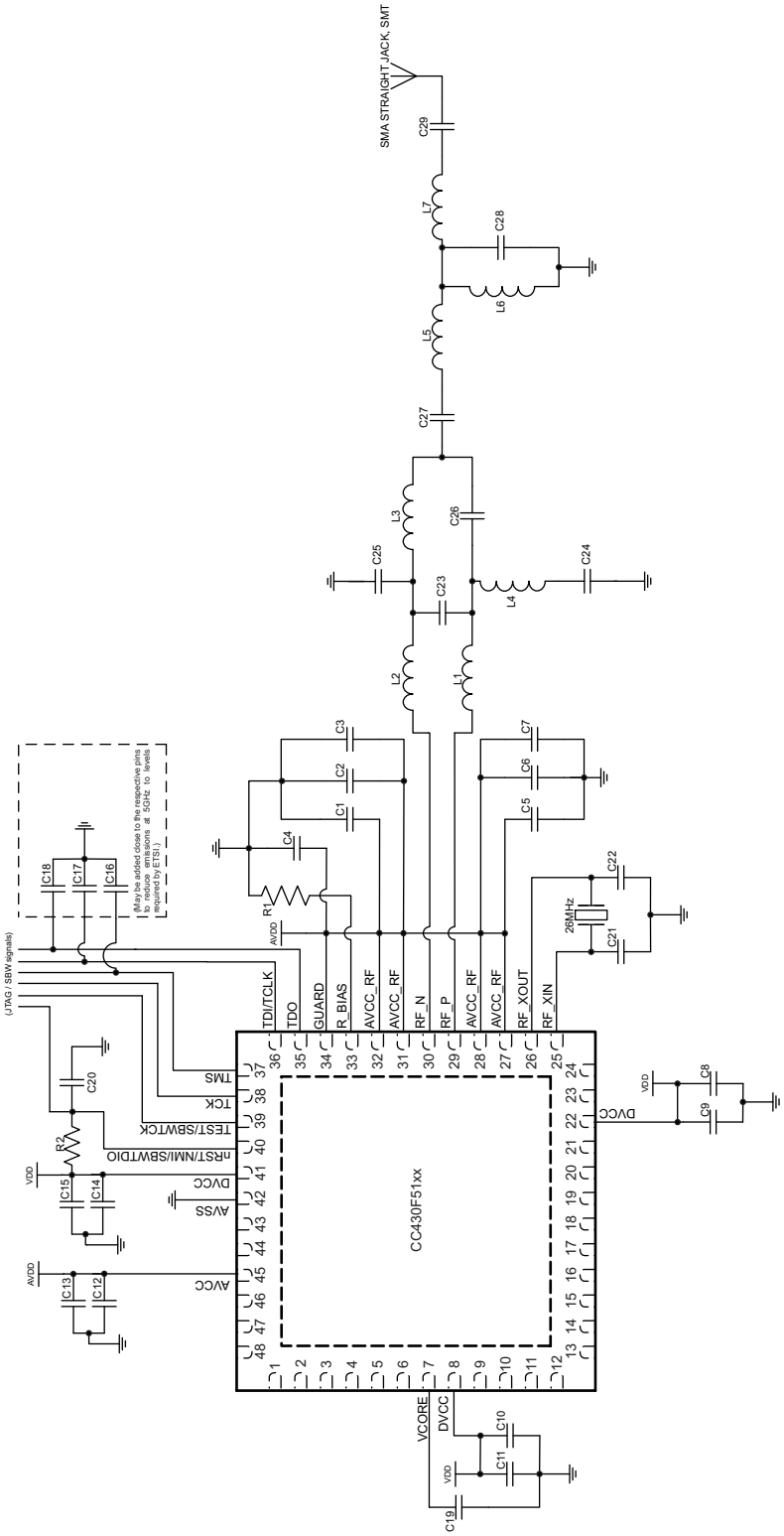

Copyright © 2017, Texas Instruments Incorporated

For a complete reference design including layout, see the CC430 wireless development tools, their related documentation, and the *MSP430 Hardware Tools User's Guide*.

Figure 7-2. Typical Application Circuit CC430F51xx

Table 7-1. Bill of Materials

COMPONENTS	FOR 315 MHz	FOR 433 MHz	FOR 868 or 915 MHz	COMMENT
C1, C3, C4, C5, C7, C9, C11, C13, C15	100 nF			Decoupling capacitors
C8, C10, C12, C14	10 µF			Decoupling capacitors
C2, C6, C16, C17, C18	2 pF			Decoupling capacitors
C19	470 nF			V_{CORE} capacitor
C20	2.2 nF			$\overline{RST}$ decoupling cap (optimized for SBW)
C21, C22	27 pF			Load capacitors for 26-MHz crystal (1)
R1	56 kΩ			R_BIAS (±1% required)
R2	47kΩ			$\overline{RST}$ pullup
L1, L2	Capacitors: 220 pF	0.016 µH	0.012 µH	
L3, L4	0.033 µH	0.027 µH	0.018 µH	
L5	0.033 µH	0.047 µH	0.015 µH	
L6	dnp (2)	dnp (2)	0.0022 µH	
L7	0.033 µH	0.051 µH	0.015 µH	
C23	dnp (2)	2.7 pF	1 pF	
C24	220 pF	220 pF	100 pF	
C25	6.8 pF	3.9 pF	1.5 pF	
C26	6.8 pF	3.9 pF	1.5 pF	
C27	220 pF	220 pF	1.5 pF	
C28	10 pF	4.7 pF	8.2 pF	
C29	220 pF	220 pF	1.5 pF	

(1) The load capacitance C_L seen by the crystal is $C_L = 1 / ((1 / C21) + (1 / C22)) + C_{parasitic}$. The parasitic capacitance $C_{parasitic}$ includes pin capacitance and PCB stray capacitance. It can be typically estimated to be approximately 2.5 pF.
(2) dnp = do not populate

8 Device and Documentation Support

8.1 Getting Started and Next Steps

For an introduction to the MSP430™ family of devices and the tools and libraries that are available to help with your development, visit the Getting Started page.

8.2 Device Nomenclature

To designate the stages in the product development cycle, TI assigns prefixes to the part numbers of all MSP MCU devices. Each MSP MCU commercial family member has one of two prefixes: MSP or XMS. These prefixes represent evolutionary stages of product development from engineering prototypes (XMS) through fully qualified production devices (MSP).

XMS – Experimental device that is not necessarily representative of the final device's electrical specifications

MSP – Fully qualified production device

XMS devices are shipped against the following disclaimer:

"Developmental product is intended for internal evaluation purposes."

MSP devices have been characterized fully, and the quality and reliability of the device have been demonstrated fully. TI's standard warranty applies.

Predictions show that prototype devices (XMS) have a greater failure rate than the standard production devices. TI recommends that these devices not be used in any production system because their expected end-use failure rate still is undefined. Only qualified production devices are to be used.

TI device nomenclature also includes a suffix with the device family name. This suffix indicates the temperature range, package type, and distribution format. Figure 8-1 provides a legend for reading the complete device name.

Copyright © 2012–2018, Texas Instruments Incorporated

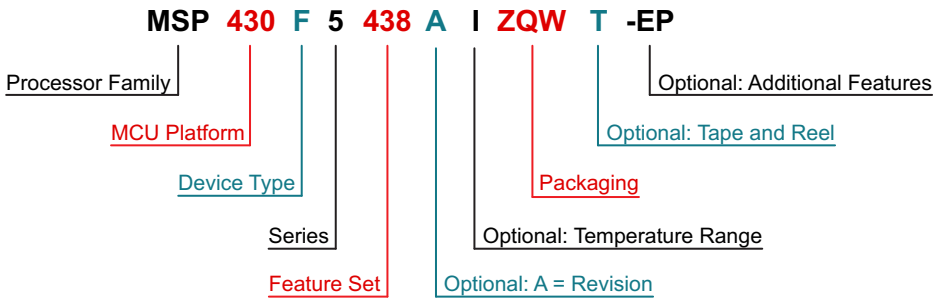

Processor Family	CC = Embedded RF Radio MSP = Mixed-Signal Processor XMS = Experimental Silicon PMS = Prototype Device	
MCU Platform	430 = MSP430 low-power microcontroller platform	
Device Type	**Memory Type** C = ROM F = Flash FR = FRAM G = Flash or FRAM (Value Line) L = No Nonvolatile Memory	**Specialized Application** AFE = Analog Front End BQ = Contactless Power CG = ROM Medical FE = Flash Energy Meter FG = Flash Medical FW = Flash Electronic Flow Meter
Series	1 = Up to 8 MHz 2 = Up to 16 MHz 3 = Legacy 4 = Up to 16 MHz with LCD	5 = Up to 25 MHz 6 = Up to 25 MHz with LCD 0 = Low-Voltage Series
Feature Set	Various levels of integration within a series	
Optional: A = Revision	N/A	
Optional: Temperature Range	S = 0°C to 50°C C = 0°C to 70°C I = –40°C to 85°C T = –40°C to 105°C	
Packaging	http://www.ti.com/packaging	
Optional: Tape and Reel	T = Small reel R = Large reel No markings = Tube or tray	
Optional: Additional Features	-EP = Enhanced Product (–40°C to 105°C) -HT = Extreme Temperature Parts (–55°C to 150°C) -Q1 = Automotive Q100 Qualified	

Figure 8-1. Device Nomenclature

8.3 Tools and Software

The CC430 microcontrollers are supported by a wide variety of software and hardware development tools. Tools are available from TI and various third parties.

Design Kits and Evaluation Modules

CC430 Sub-GHz RF Experimenter's Board The MSP-EXPCC430RFx Experimenter Kit is a complete sub-GHz development platform for the CC430 devices from the MSP430 family of ultra-low-power microcontrollers. The kit provides two sub-GHz wireless modules: the MSP-EXP430F6137Rx Base Board with the CC430F6137, and the MSP-EXP430F5137Rx Satellite Board with the CC430F5137.

Chronos: Wireless Development Tool in a Watch The eZ430-Chronos is a highly integrated, wearable wireless development system based for the CC430 in a sports watch. It may be used as a reference platform for watch systems, a personal display for personal area networks, or as a wireless sensor node for remote data collection.

Sub-1 GHz RF Spectrum Analyzer Tool The MSP-SA430-SUB1GHZ Spectrum Analyzer is CC430-based reference design that can be used to implement an easy and affordable tool to jumpstart RF development in the sub-GHz frequency range. More and more electronic devices include a built-in RF link. RF transceivers are inexpensive - but the equipment to design and debug such systems is not. The CC430-based spectrum analyzer provides an affordable development tool that reduces the time needed on expensive measurement equipment.

Software

MSP430Ware™ Software MSP430Ware software is a collection of code examples, data sheets, and other design resources for all MSP430 devices delivered in a convenient package. In addition to providing a complete collection of existing MSP430 design resources, MSP430Ware software also includes a high-level API called MSP Driver Library. This library makes it easy to program MSP430 hardware. MSP430Ware software is available as a component of CCS or as a stand-alone package.

CC430F613x Code Examples C Code examples that configure each of the integrated peripherals for various application needs.

ULP (Ultra-Low Power) Advisor ULP (Ultra-Low Power) Advisor is a tool for guiding developers to write more efficient code to fully utilize the unique ultra-low power features of MSP430 and MSP432 microcontrollers. Aimed at both experienced and new microcontroller developers, ULP Advisor checks your code against a thorough ULP checklist to squeeze every last nano amp out of your application.

Development Tools

Code Composer Studio™ Integrated Development Environment for MSP Microcontrollers Code Composer Studio is an integrated development environment (IDE) that supports all MSP microcontroller devices. Code Composer Studio comprises a suite of embedded software utilities used to develop and debug embedded applications. It includes an optimizing C/C++ compiler, source code editor, project build environment, debugger, profiler, and many other features.

GCC - Open Source Compiler for MSP430 Microcontrollers TI has partnered with Red Hat to bring you a new and fully supported open source compiler as the successor to the community driven MSPGCC. This free GCC 4.9 compiler supports all MSP430 devices and has no code size limit. In addition, this compiler can be used stand-alone or selected within Code Composer Studio v6.0 or later.

MSP MCU Programmer and Debugger The MSP-FET is a powerful emulation development tool – often called a debug probe – which allows users to quickly begin application development on MSP low-power microcontrollers (MCU).

MSP-GANG Production Programmer The MSP Gang Programmer is a device programmer that can program up to eight identical devices at the same time. The MSP Gang Programmer connects to a host PC using a standard RS-232 or USB connection and provides flexible programming options that allow the user to fully customize the process.

Copyright © 2012–2018, Texas Instruments Incorporated

8.4 Documentation Support

The following documents describe the CC430F613x, CC430F612x, and CC430F513x devices. Copies of these documents are available on the Internet at www.ti.com.

To receive notification of documentation updates—including silicon errata—go to the product folder for your device on ti.com (for links to the product folders, see Section 8.5). In the upper right corner, click the "Alert me" button. This registers you to receive a weekly digest of product information that has changed (if any). For change details, check the revision history of any revised document.

Errata

CC430F6147 Device Erratasheet Describes the known exceptions to the functional specifications.

CC430F6145 Device Erratasheet Describes the known exceptions to the functional specifications.

CC430F6143 Device Erratasheet Describes the known exceptions to the functional specifications.

CC430F5147 Device Erratasheet Describes the known exceptions to the functional specifications.

CC430F5145 Device Erratasheet Describes the known exceptions to the functional specifications.

CC430F5143 Device Erratasheet Describes the known exceptions to the functional specifications.

CC430F5125 Device Erratasheet Describes the known exceptions to the functional specifications.

CC430F5123 Device Erratasheet Describes the known exceptions to the functional specifications.

User's Guides

CC430 Family User's Guide Detailed information on the modules and peripherals available in this device family.

Code Composer Studio for MSP430 User's Guide This user's guide describes how to use the TI Code Composer Studio IDE with the MSP430 ultra-low-power microcontrollers.

MSP430™ Flash Device Bootloader (BSL) User's Guide The MSP430 bootloader (BSL) lets users communicate with embedded memory in the MSP430 microcontroller during the prototyping phase, final production, and in service. Both the programmable memory (flash memory) and the data memory (RAM) can be modified as required. Do not confuse the bootloader with the bootstrap loader programs found in some digital signal processors (DSPs) that automatically load program code (and data) from external memory to the internal memory of the DSP.

MSP430 Programming With the JTAG Interface This document describes the functions that are required to erase, program, and verify the memory module of the MSP430 flash-based and FRAM-based microcontroller families using the JTAG communication port. In addition, it describes how to program the JTAG access security fuse that is available on all MSP430 devices. This document describes device access using both the standard 4-wire JTAG interface and the 2-wire JTAG interface, which is also referred to as Spy-Bi-Wire (SBW).

MSP430 Hardware Tools User's Guide This manual describes the hardware of the TI MSP-FET430 Flash Emulation Tool (FET). The FET is the program development tool for the MSP430 ultra-low-power microcontroller. Both available interface types, the parallel port interface and the USB interface, are described.

Application Reports

MSP430 32-kHz Crystal Oscillators Selection of the right crystal, correct load circuit, and proper board layout are important for a stable crystal oscillator. This application report summarizes crystal oscillator function and explains the parameters to select the correct crystal for MSP430 ultra-low-power operation. In addition, hints and examples for correct board layout are given. The document also contains detailed information on the possible oscillator tests to ensure stable oscillator operation in mass production.

MSP430 System-Level ESD Considerations System-Level ESD has become increasingly demanding with silicon technology scaling towards lower voltages and the need for designing cost-effective and ultra-low-power components. This application report addresses three different ESD topics to help board designers and OEMs understand and design robust system-level designs: (1) Component-level ESD testing and system-level ESD testing, their differences and why component-level ESD rating does not ensure system-level robustness. (2) General design guidelines for system-level ESD protection at different levels including enclosures, cables, PCB layout, and on-board ESD protection devices. (3) Introduction to System

Efficient ESD Design (SEED), a co-design methodology of on-board and on-chip ESD protection to achieve system-level ESD robustness, with example simulations and test results. A few real-world system-level ESD protection design examples and their results are also discussed.

DN005 CC11xx Sensitivity versus Frequency Offset and Crystal Accuracy This design note provides plots of CC11xx (CC1100, CC1100E, CC1101, CC1110, and CC1111) sensitivity versus frequency offset for different data rates. The required crystal accuracy is calculated from these plots. The results are also applicable for CC430.

AN050 Using the CC1101 in the European 868 MHz SRD Band The CC1101 is a truly low cost, highly integrated, and very flexible RF transceiver. The CC1101 is primarily designed for use in low-power applications in the 315, 433, 868 and 915 MHz SRD/ISM bands. This application note describes how to use the CC1101 in the European 863 – 870 MHz SRD frequency bands in order to comply with EN 300 220 requirements. The application note is also applicable for CC1110, CC1111, and CC430 SoCs as they use the same radio as CC1101.

DN010 Close-in Reception with CC1101 This document describes how the CC1100E and CC1101 can be used in close-range applications. The chips have a saturation limit of approximately −15 dBm at 250 kbps, which might be a challenge for some short-range applications. Two suggested solutions are presented, the first is a double-transmit scheme and the second is to shift the receivers dynamic range during close-range reception.

DN013 Programming Output Power on CC1101 The CC1101 RF output power level is set by the PATABLE register setting. This register setting also influences the power levels at the different harmonics and the current consumption for the device. These parameters must therefore be considered when choosing the optimal register settings. This document gives complete CC1101 PA tables with typical output power, harmonics, and current consumption for the different register settings at 25°C and 3.0 V supply voltage.

DN017 CC11xx 868/915 MHz RF Matching This design note gives a short introduction to RF matching and important aspects when designing products using the CC11xx parts. Because all of the CC11xx parts have the same RF front end, the same matching network can be used between the radio and the antenna. TI provides a reference design for all CC11xx products. These reference designs show recommended placement and values for decoupling capacitors and components in the matching network.

Copyright © 2012–2018, Texas Instruments Incorporated

8.5 Related Links

Table 8-1 lists quick access links. Categories include technical documents, support and community resources, tools and software, and quick access to sample or buy.

Table 8-1. Related Links

PARTS	PRODUCT FOLDER	ORDER NOW	TECHNICAL DOCUMENTS	TOOLS & SOFTWARE	SUPPORT & COMMUNITY
CC430F6147	Click here	Click here	Click here	Click here	Click here
CC430F6145	Click here	Click here	Click here	Click here	Click here
CC430F6143	Click here	Click here	Click here	Click here	Click here
CC430F5147	Click here	Click here	Click here	Click here	Click here
CC430F5145	Click here	Click here	Click here	Click here	Click here
CC430F5143	Click here	Click here	Click here	Click here	Click here
CC430F5125	Click here	Click here	Click here	Click here	Click here
CC430F5123	Click here	Click here	Click here	Click here	Click here

8.6 Community Resources

The following links connect to TI community resources. Linked contents are provided "AS IS" by the respective contributors. They do not constitute TI specifications and do not necessarily reflect TI's views; see TI's Terms of Use.

TI E2E™ Community
TI's Engineer-to-Engineer (E2E) Community. Created to foster collaboration among engineers. At e2e.ti.com, you can ask questions, share knowledge, explore ideas, and help solve problems with fellow engineers.

TI Embedded Processors Wiki
Texas Instruments Embedded Processors Wiki. Established to help developers get started with embedded processors from Texas Instruments and to foster innovation and growth of general knowledge about the hardware and software surrounding these devices.

8.7 Trademarks

MSP430, MSP430Ware, E2E are trademarks of Texas Instruments.
All other trademarks are the property of their respective owners.

8.8 Electrostatic Discharge Caution

This integrated circuit can be damaged by ESD. Texas Instruments recommends that all integrated circuits be handled with appropriate precautions. Failure to observe proper handling and installation procedures can cause damage.

ESD damage can range from subtle performance degradation to complete device failure. Precision integrated circuits may be more susceptible to damage because very small parametric changes could cause the device not to meet its published specifications.

8.9 Export Control Notice

Recipient agrees to not knowingly export or re-export, directly or indirectly, any product or technical data (as defined by the U.S., EU, and other Export Administration Regulations) including software, or any controlled product restricted by other applicable national regulations, received from disclosing party under nondisclosure obligations (if any), or any direct product of such technology, to any destination to which such export or re-export is restricted or prohibited by U.S. or other applicable laws, without obtaining prior authorization from U.S. Department of Commerce and other competent Government authorities to the extent required by those laws.

8.10 Glossary

TI Glossary This glossary lists and explains terms, acronyms, and definitions.

9 Mechanical, Packaging, and Orderable Information

The following pages include mechanical, packaging, and orderable information. This information is the most current data available for the designated devices. This data is subject to change without notice and revision of this document. For browser-based versions of this data sheet, refer to the left-hand navigation.

Copyright © 2012–2018, Texas Instruments Incorporated

PACKAGING INFORMATION

Orderable part number	Status (1)	Material type (2)	Package | Pins	Package qty | Carrier	RoHS (3)	Lead finish/ Ball material (4)	MSL rating/ Peak reflow (5)	Op temp (°C)	Part marking (6)
CC430F5123IRGZR	Active	Production	VQFN (RGZ) | 48	2500 | LARGE T&R	Yes	NIPDAU	Level-3-260C-168 HR	-40 to 85	CC430 F5123
CC430F5123IRGZR.B	Active	Production	VQFN (RGZ) | 48	2500 | LARGE T&R	Yes	NIPDAU	Level-3-260C-168 HR	-40 to 85	CC430 F5123
CC430F5123IRGZT	Active	Production	VQFN (RGZ) | 48	250 | SMALL T&R	Yes	NIPDAU	Level-3-260C-168 HR	-40 to 85	CC430 F5123
CC430F5123IRGZT.B	Active	Production	VQFN (RGZ) | 48	250 | SMALL T&R	Yes	NIPDAU	Level-3-260C-168 HR	-40 to 85	CC430 F5123
CC430F5125IRGZR	Active	Production	VQFN (RGZ) | 48	2500 | LARGE T&R	Yes	NIPDAU	Level-3-260C-168 HR	-40 to 85	CC430 F5125
CC430F5125IRGZR.B	Active	Production	VQFN (RGZ) | 48	2500 | LARGE T&R	Yes	NIPDAU	Level-3-260C-168 HR	-40 to 85	CC430 F5125
CC430F5125IRGZT	Active	Production	VQFN (RGZ) | 48	250 | SMALL T&R	Yes	NIPDAU	Level-3-260C-168 HR	-40 to 85	CC430 F5125
CC430F5125IRGZT.B	Active	Production	VQFN (RGZ) | 48	250 | SMALL T&R	Yes	NIPDAU	Level-3-260C-168 HR	-40 to 85	CC430 F5125
CC430F5143IRGZR	Active	Production	VQFN (RGZ) | 48	2500 | LARGE T&R	Yes	NIPDAU	Level-3-260C-168 HR	-40 to 85	CC430 F5143
CC430F5143IRGZR.B	Active	Production	VQFN (RGZ) | 48	2500 | LARGE T&R	Yes	NIPDAU	Level-3-260C-168 HR	-40 to 85	CC430 F5143
CC430F5143IRGZT	Active	Production	VQFN (RGZ) | 48	250 | SMALL T&R	Yes	NIPDAU	Level-3-260C-168 HR	-40 to 85	CC430 F5143
CC430F5143IRGZT.B	Active	Production	VQFN (RGZ) | 48	250 | SMALL T&R	Yes	NIPDAU	Level-3-260C-168 HR	-40 to 85	CC430 F5143
CC430F5145IRGZR	Active	Production	VQFN (RGZ) | 48	2500 | LARGE T&R	Yes	NIPDAU	Level-3-260C-168 HR	-40 to 85	CC430 F5145
CC430F5145IRGZR.B	Active	Production	VQFN (RGZ) | 48	2500 | LARGE T&R	Yes	NIPDAU	Level-3-260C-168 HR	-40 to 85	CC430 F5145
CC430F5145IRGZT	Active	Production	VQFN (RGZ) | 48	250 | SMALL T&R	Yes	NIPDAU	Level-3-260C-168 HR	-40 to 85	CC430 F5145
CC430F5145IRGZT.B	Active	Production	VQFN (RGZ) | 48	250 | SMALL T&R	Yes	NIPDAU	Level-3-260C-168 HR	-40 to 85	CC430 F5145

Orderable part number	Status (1)	Material type (2)	Package | Pins	Package qty | Carrier	RoHS (3)	Lead finish/ Ball material (4)	MSL rating/ Peak reflow (5)	Op temp (°C)	Part marking (6)
CC430F5147IRGZR	Active	Production	VQFN (RGZ) | 48	2500 | LARGE T&R	Yes	NIPDAU	Level-3-260C-168 HR	-40 to 85	CC430 F5147
CC430F5147IRGZR.B	Active	Production	VQFN (RGZ) | 48	2500 | LARGE T&R	Yes	NIPDAU	Level-3-260C-168 HR	-40 to 85	CC430 F5147
CC430F5147IRGZT	Active	Production	VQFN (RGZ) | 48	250 | SMALL T&R	Yes	NIPDAU	Level-3-260C-168 HR	-40 to 85	CC430 F5147
CC430F5147IRGZT.B	Active	Production	VQFN (RGZ) | 48	250 | SMALL T&R	Yes	NIPDAU	Level-3-260C-168 HR	-40 to 85	CC430 F5147
CC430F6147IRGCR	Active	Production	VQFN (RGC) | 64	2000 | LARGE T&R	Yes	NIPDAU | NIPDAUAG	Level-3-260C-168 HR	-40 to 85	CC430F6147
CC430F6147IRGCR.B	Active	Production	VQFN (RGC) | 64	2000 | LARGE T&R	Yes	NIPDAU	Level-3-260C-168 HR	-40 to 85	CC430F6147
CC430F6147IRGCT	Active	Production	VQFN (RGC) | 64	250 | SMALL T&R	Yes	NIPDAU | NIPDAUAG	Level-3-260C-168 HR	-40 to 85	CC430F6147
CC430F6147IRGCT.B	Active	Production	VQFN (RGC) | 64	250 | SMALL T&R	Yes	NIPDAU	Level-3-260C-168 HR	-40 to 85	CC430F6147

(1) **Status:** For more details on status, see our product life cycle.

(2) **Material type:** When designated, preproduction parts are prototypes/experimental devices, and are not yet approved or released for full production. Testing and final process, including without limitation quality assurance, reliability performance testing, and/or process qualification, may not yet be complete, and this item is subject to further changes or possible discontinuation. If available for ordering, purchases will be subject to an additional waiver at checkout, and are intended for early internal evaluation purposes only. These items are sold without warranties of any kind.

(3) **RoHS values:** Yes, No, RoHS Exempt. See the TI RoHS Statement for additional information and value definition.

(4) **Lead finish/Ball material:** Parts may have multiple material finish options. Finish options are separated by a vertical ruled line. Lead finish/Ball material values may wrap to two lines if the finish value exceeds the maximum column width.

(5) **MSL rating/Peak reflow:** The moisture sensitivity level ratings and peak solder (reflow) temperatures. In the event that a part has multiple moisture sensitivity ratings, only the lowest level per JEDEC standards is shown. Refer to the shipping label for the actual reflow temperature that will be used to mount the part to the printed circuit board.

(6) **Part marking:** There may be an additional marking, which relates to the logo, the lot trace code information, or the environmental category of the part.

Multiple part markings will be inside parentheses. Only one part marking contained in parentheses and separated by a "~" will appear on a part. If a line is indented then it is a continuation of the previous line and the two combined represent the entire part marking for that device.

Important Information and Disclaimer: The information provided on this page represents TI's knowledge and belief as of the date that it is provided. TI bases its knowledge and belief on information provided by third parties, and makes no representation or warranty as to the accuracy of such information. Efforts are underway to better integrate information from third parties. TI has taken and continues to take reasonable steps to provide representative

and accurate information but may not have conducted destructive testing or chemical analysis on incoming materials and chemicals. TI and TI suppliers consider certain information to be proprietary, and thus CAS numbers and other limited information may not be available for release.

In no event shall TI's liability arising out of such information exceed the total purchase price of the TI part(s) at issue in this document sold by TI to Customer on an annual basis.

TAPE AND REEL INFORMATION

REEL DIMENSIONS

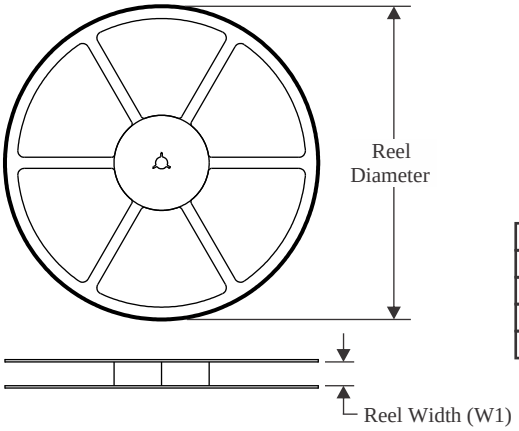

TAPE DIMENSIONS

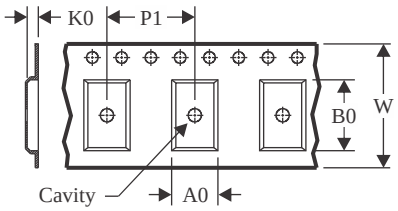

A0	Dimension designed to accommodate the component width
B0	Dimension designed to accommodate the component length
K0	Dimension designed to accommodate the component thickness
W	Overall width of the carrier tape
P1	Pitch between successive cavity centers

QUADRANT ASSIGNMENTS FOR PIN 1 ORIENTATION IN TAPE

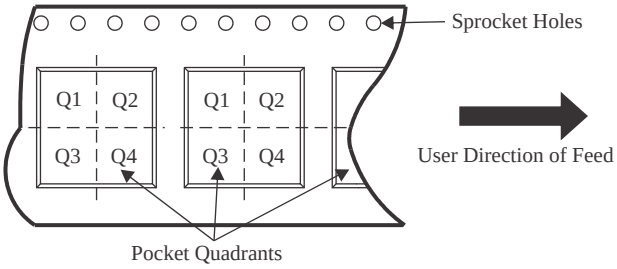

*All dimensions are nominal

Device	Package Type	Package Drawing	Pins	SPQ	Reel Diameter (mm)	Reel Width W1 (mm)	A0 (mm)	B0 (mm)	K0 (mm)	P1 (mm)	W (mm)	Pin1 Quadrant
CC430F5123IRGZR	VQFN	RGZ	48	2500	330.0	16.4	7.3	7.3	1.5	12.0	16.0	Q2
CC430F5125IRGZR	VQFN	RGZ	48	2500	330.0	16.4	7.3	7.3	1.5	12.0	16.0	Q2
CC430F5143IRGZR	VQFN	RGZ	48	2500	330.0	16.4	7.3	7.3	1.5	12.0	16.0	Q2
CC430F5145IRGZR	VQFN	RGZ	48	2500	330.0	16.4	7.3	7.3	1.5	12.0	16.0	Q2
CC430F5147IRGZR	VQFN	RGZ	48	2500	330.0	16.4	7.3	7.3	1.5	12.0	16.0	Q2

TAPE AND REEL BOX DIMENSIONS

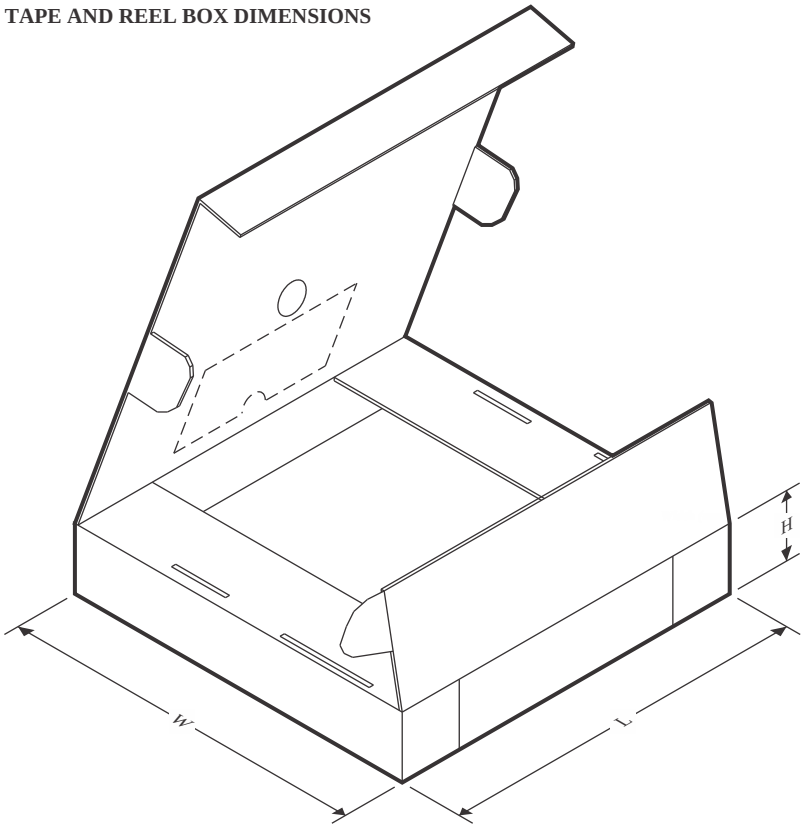

*All dimensions are nominal

Device	Package Type	Package Drawing	Pins	SPQ	Length (mm)	Width (mm)	Height (mm)
CC430F5123IRGZR	VQFN	RGZ	48	2500	350.0	350.0	43.0
CC430F5125IRGZR	VQFN	RGZ	48	2500	350.0	350.0	43.0
CC430F5143IRGZR	VQFN	RGZ	48	2500	350.0	350.0	43.0
CC430F5145IRGZR	VQFN	RGZ	48	2500	350.0	350.0	43.0
CC430F5147IRGZR	VQFN	RGZ	48	2500	350.0	350.0	43.0

GENERIC PACKAGE VIEW

RGZ 48

VQFN - 1 mm max height

7 x 7, 0.5 mm pitch

PLASTIC QUADFLAT PACK- NO LEAD

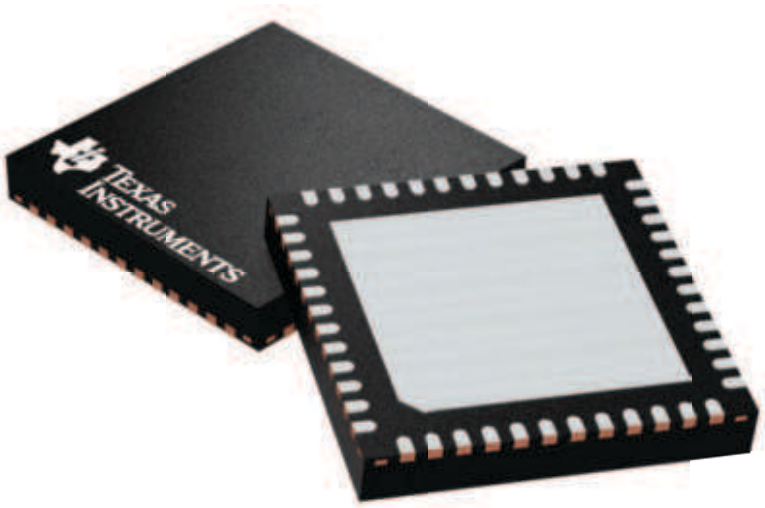

Images above are just a representation of the package family, actual package may vary.
Refer to the product data sheet for package details.

4224671/A

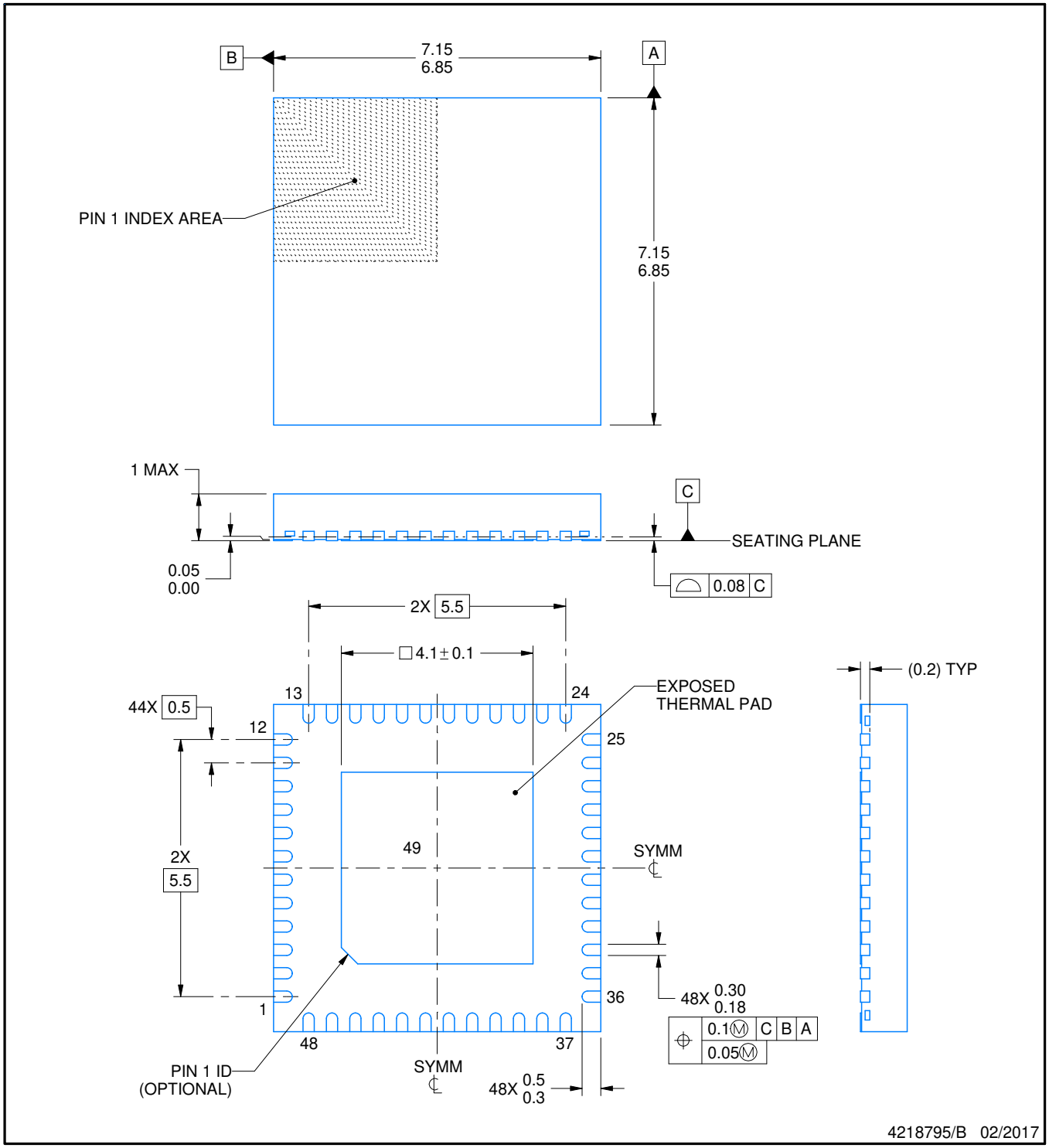

NOTES:

1. All linear dimensions are in millimeters. Any dimensions in parenthesis are for reference only. Dimensioning and tolerancing per ASME Y14.5M.
2. This drawing is subject to change without notice.
3. The package thermal pad must be soldered to the printed circuit board for thermal and mechanical performance.

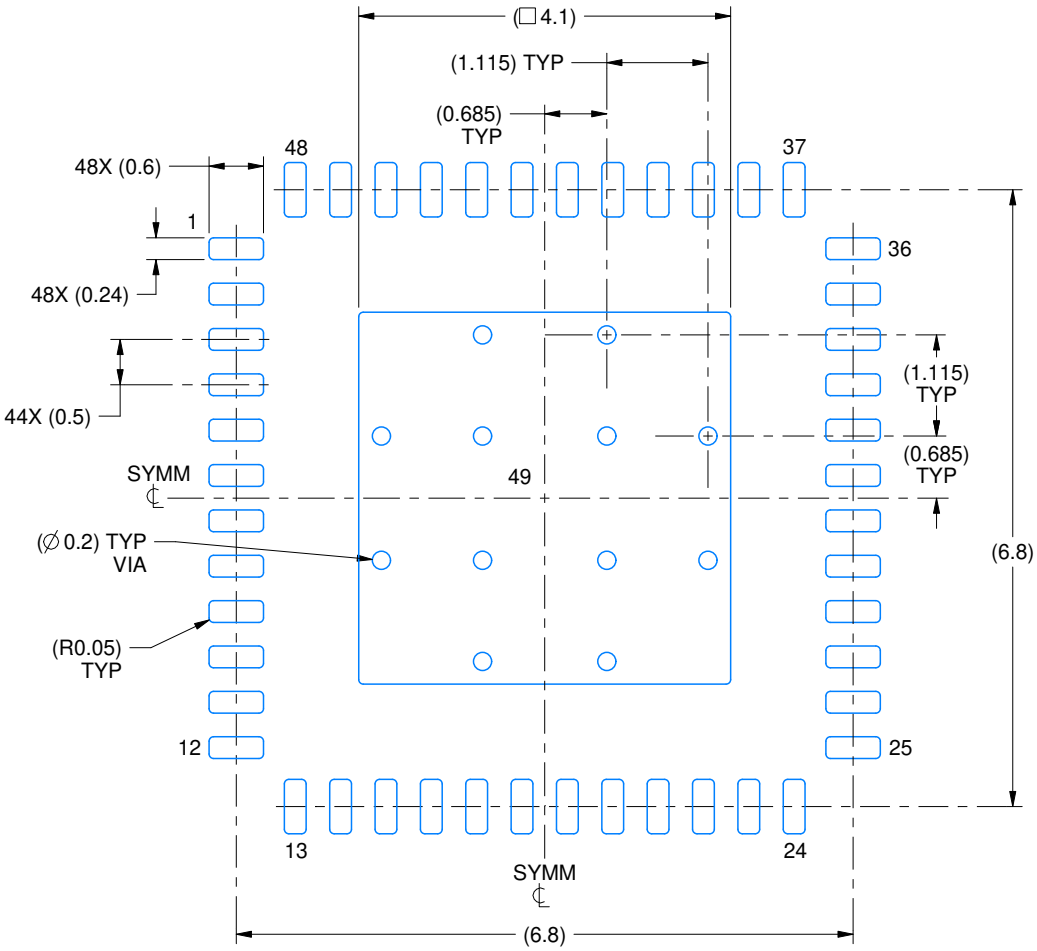

LAND PATTERN EXAMPLE
EXPOSED METAL SHOWN
SCALE:12X

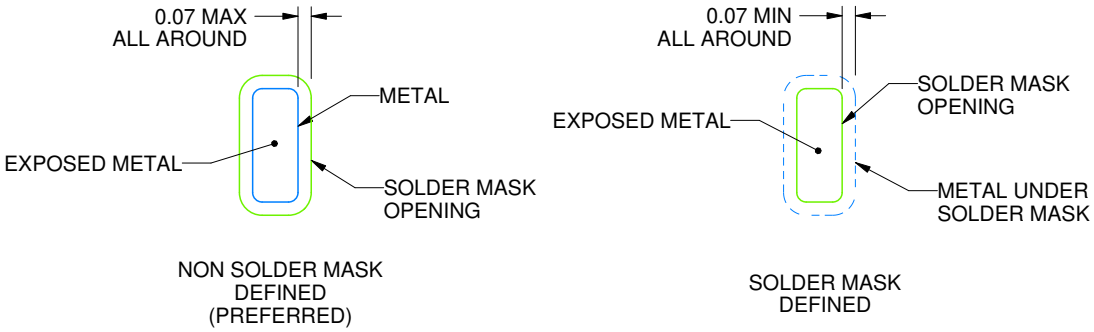

SOLDER MASK DETAILS

4218795/B 02/2017

NOTES: (continued)

4. This package is designed to be soldered to a thermal pad on the board. For more information, see Texas Instruments literature number SLUA271 (www.ti.com/lit/slua271).
5. Vias are optional depending on application, refer to device data sheet. If any vias are implemented, refer to their locations shown on this view. It is recommended that vias under paste be filled, plugged or tented.

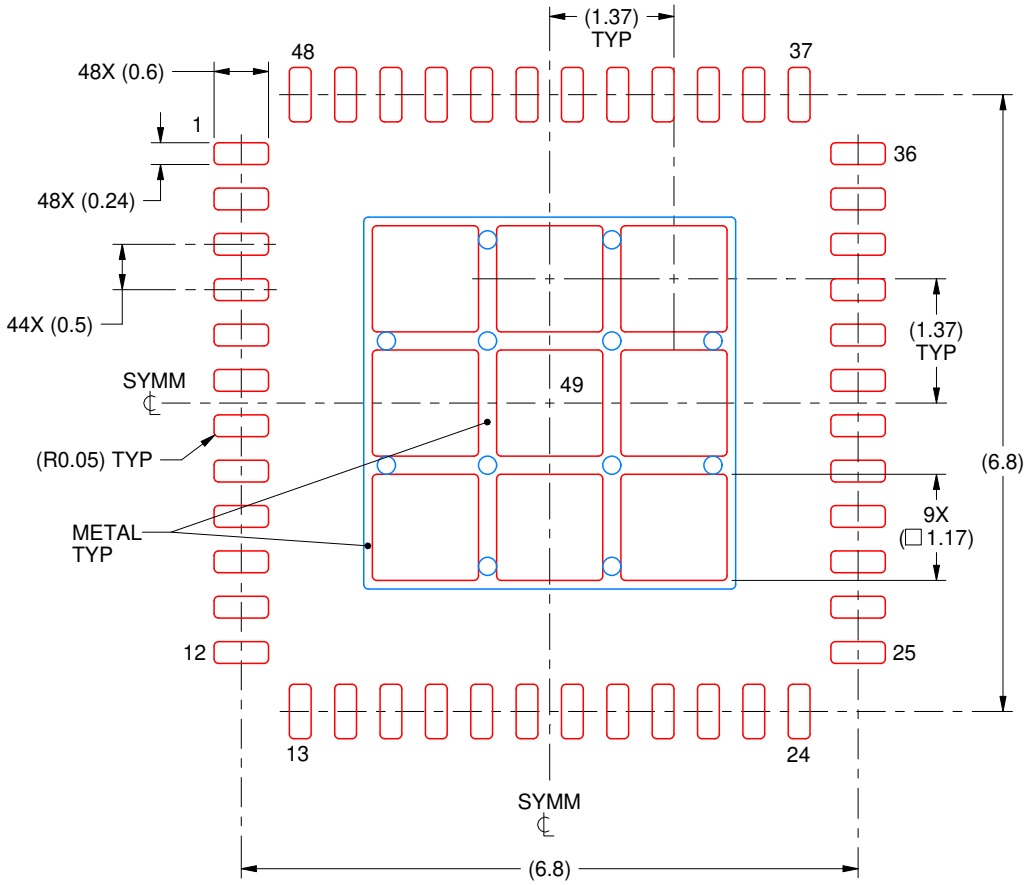

SOLDER PASTE EXAMPLE
BASED ON 0.125 mm THICK STENCIL

EXPOSED PAD 49
73% PRINTED SOLDER COVERAGE BY AREA UNDER PACKAGE
SCALE:12X

4218795/B 02/2017

NOTES: (continued)

6. Laser cutting apertures with trapezoidal walls and rounded corners may offer better paste release. IPC-7525 may have alternate design recommendations.

GENERIC PACKAGE VIEW

RGC 64

VQFN - 1 mm max height

9 x 9, 0.5 mm pitch

PLASTIC QUAD FLATPACK - NO LEAD

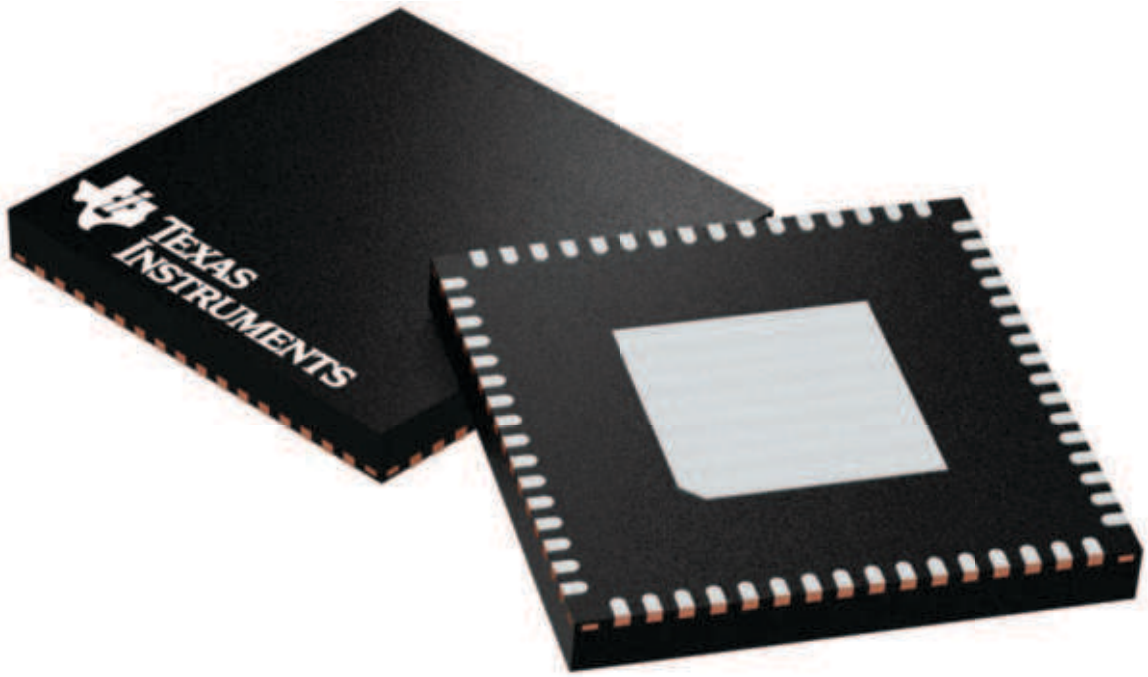

Images above are just a representation of the package family, actual package may vary.
Refer to the product data sheet for package details.

4224597/A

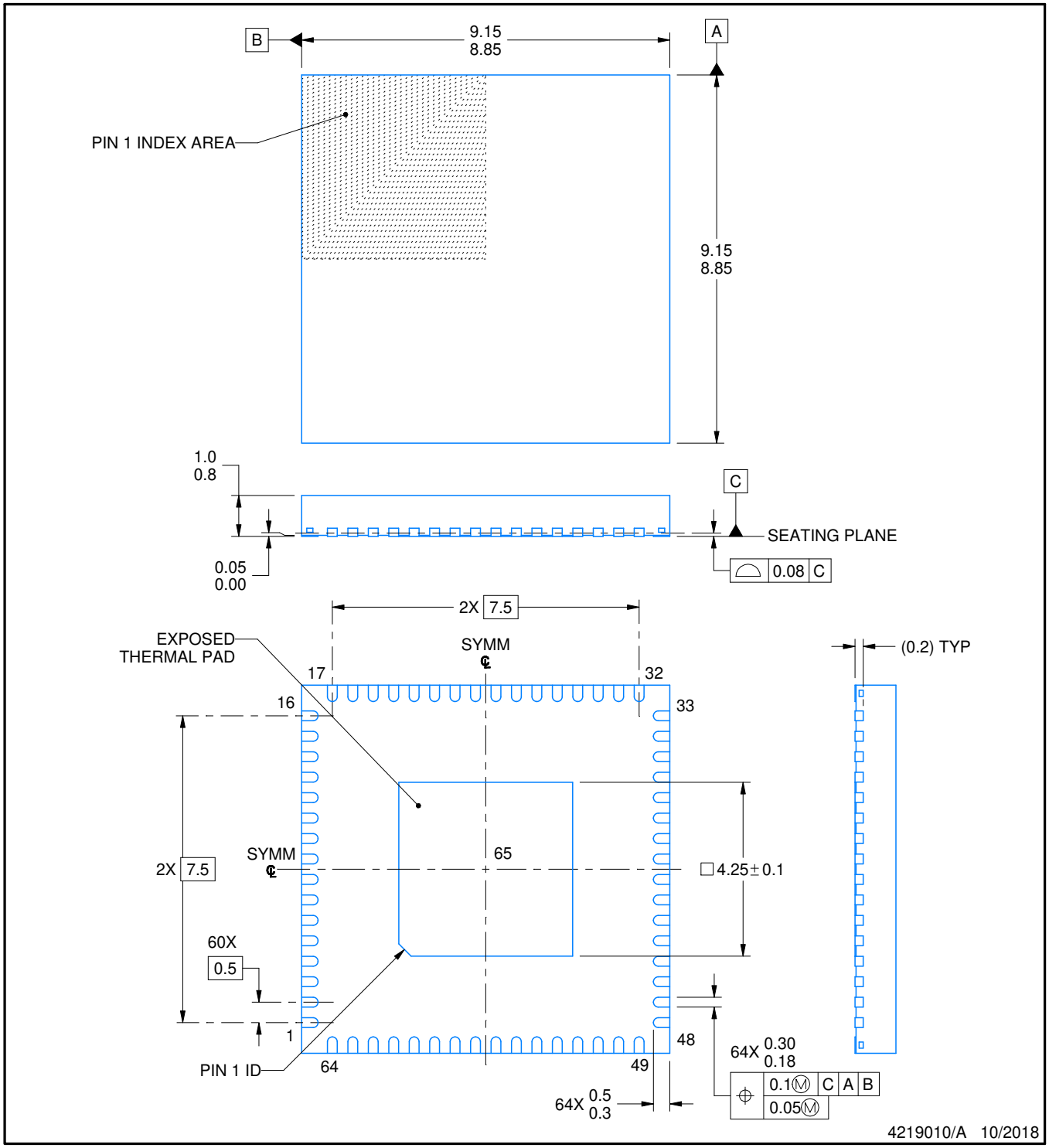

NOTES:

1. All linear dimensions are in millimeters. Any dimensions in parenthesis are for reference only. Dimensioning and tolerancing per ASME Y14.5M.
2. This drawing is subject to change without notice.
3. The package thermal pad must be soldered to the printed circuit board for thermal and mechanical performance.

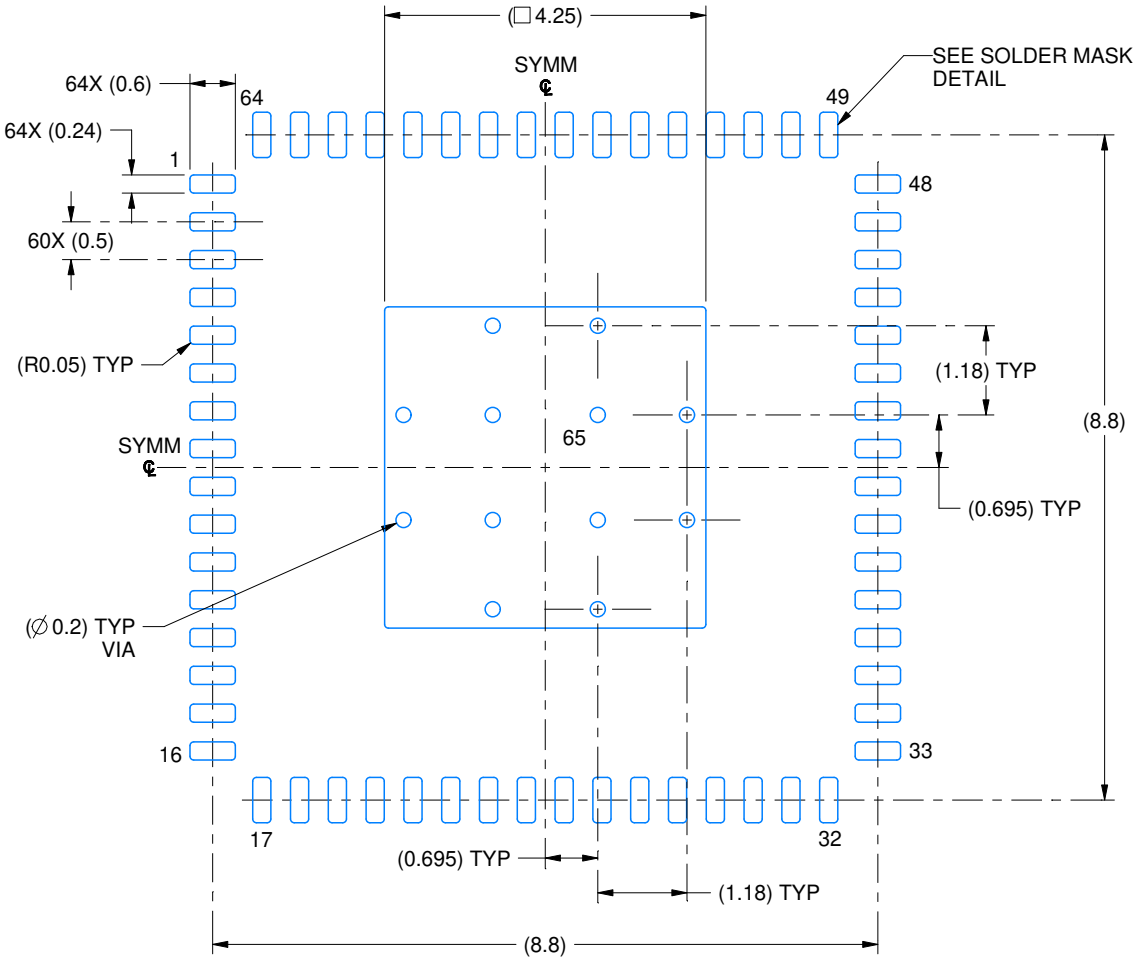

LAND PATTERN EXAMPLE
EXPOSED METAL SHOWN
SCALE: 10X

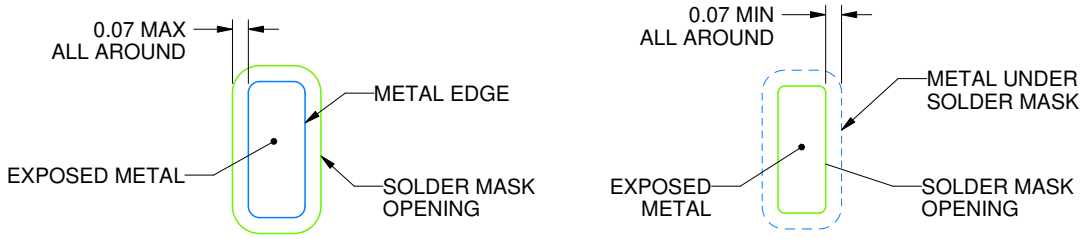

NON SOLDER MASK DEFINED (PREFERRED)

SOLDER MASK DEFINED

SOLDER MASK DETAILS

4219010/A 10/2018

NOTES: (continued)

4. This package is designed to be soldered to a thermal pad on the board. For more information, see Texas Instruments literature number SLUA271 (www.ti.com/lit/slua271).
5. Vias are optional depending on application, refer to device data sheet. If any vias are implemented, refer to their locations shown on this view. It is recommended that vias under paste be filled, plugged or tented.

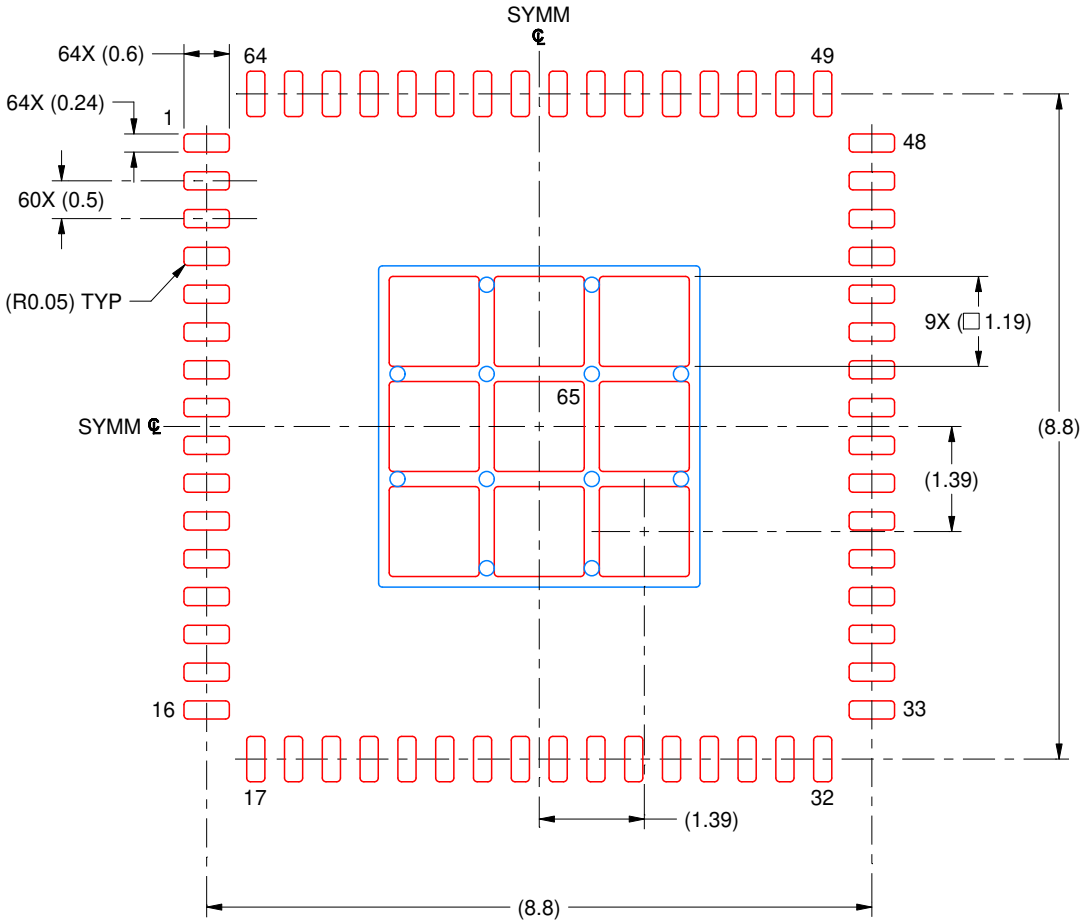

SOLDER PASTE EXAMPLE
BASED ON 0.125 MM THICK STENCIL
SCALE: 10X

EXPOSED PAD 65
71% PRINTED SOLDER COVERAGE BY AREA UNDER PACKAGE

4219010/A 10/2018

NOTES: (continued)

6. Laser cutting apertures with trapezoidal walls and rounded corners may offer better paste release. IPC-7525 may have alternate design recommendations.

IMPORTANT NOTICE AND DISCLAIMER

TI PROVIDES TECHNICAL AND RELIABILITY DATA (INCLUDING DATASHEETS), DESIGN RESOURCES (INCLUDING REFERENCE DESIGNS), APPLICATION OR OTHER DESIGN ADVICE, WEB TOOLS, SAFETY INFORMATION, AND OTHER RESOURCES “AS IS” AND WITH ALL FAULTS, AND DISCLAIMS ALL WARRANTIES, EXPRESS AND IMPLIED, INCLUDING WITHOUT LIMITATION ANY IMPLIED WARRANTIES OF MERCHANTABILITY, FITNESS FOR A PARTICULAR PURPOSE OR NON-INFRINGEMENT OF THIRD PARTY INTELLECTUAL PROPERTY RIGHTS.

These resources are intended for skilled developers designing with TI products. You are solely responsible for (1) selecting the appropriate TI products for your application, (2) designing, validating and testing your application, and (3) ensuring your application meets applicable standards, and any other safety, security, regulatory or other requirements.

These resources are subject to change without notice. TI grants you permission to use these resources only for development of an application that uses the TI products described in the resource. Other reproduction and display of these resources is prohibited. No license is granted to any other TI intellectual property right or to any third party intellectual property right. TI disclaims responsibility for, and you fully indemnify TI and its representatives against any claims, damages, costs, losses, and liabilities arising out of your use of these resources.

TI’s products are provided subject to TI’s Terms of Sale, TI’s General Quality Guidelines, or other applicable terms available either on ti.com or provided in conjunction with such TI products. TI’s provision of these resources does not expand or otherwise alter TI’s applicable warranties or warranty disclaimers for TI products. Unless TI explicitly designates a product as custom or customer-specified, TI products are standard, catalog, general purpose devices.

TI objects to and rejects any additional or different terms you may propose.

Copyright © 2025, Texas Instruments Incorporated

Last updated 10/2025