CD54HCT258, CD74HCT258
QUADRUPLE 2-LINE TO 1-LINE SELECTORS/MULTIPLEXERS WITH 3-STATE OUTPUTS

SCHS276A – MAY 2003

- **4.5-V to 5.5-V V_{CC} Operation**
- **Wide Operating Temperature Range of –55°C to 125°C**
- **Balanced Propagation Delays and Transition Times**
- **Standard Outputs Drive Up To 10 LS-TTL Loads**
- **Significant Power Reduction Compared to LS-TTL Logic ICs**
- **Inputs Are TTL-Voltage Compatible**

CD54HCT258 . . . F PACKAGE
CD74HCT258 . . . E PACKAGE
(TOP VIEW)

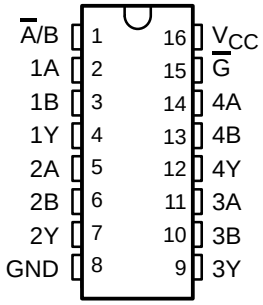

description/ordering information

These devices are designed to multiplex signals from 4-bit data sources to 4-output data lines in bus-organized systems. The 3-state outputs do not load the data lines when the output-enable ($\overline{G}$) input is at a high logic level.

To ensure the high-impedance state during power up or power down, $\overline{G}$ should be tied to V_{CC} through a pullup resistor; the minimum value of the resistor is determined by the current-sinking capability of the driver.

ORDERING INFORMATION

T_A	PACKAGE†		ORDERABLE PART NUMBER	TOP-SIDE MARKING
–55°C to 125°C	PDIP – E	Tube	CD74HCT258E	CD74HCT258E
	CDIP – F	Tube	CD54HCT258F3A	CD54HCT258F3A

† Package drawings, standard packing quantities, thermal data, symbolization, and PCB design guidelines are available at www.ti.com/sc/package.

FUNCTION TABLE

INPUTS				OUTPUT
$\overline{G}$	$\overline{A}$/B	A	B	Y
H	X	X	X	Z
L	L	L	X	H
L	L	H	X	L
L	H	X	L	H
L	H	X	H	L

Please be aware that an important notice concerning availability, standard warranty, and use in critical applications of Texas Instruments semiconductor products and disclaimers thereto appears at the end of this data sheet.

PRODUCTION DATA information is current as of publication date. Products conform to specifications per the terms of Texas Instruments standard warranty. Production processing does not necessarily include testing of all parameters.

Copyright © 2003, Texas Instruments Incorporated

On products compliant to MIL-PRF-38535, all parameters are tested unless otherwise noted. On all other products, production processing does not necessarily include testing of all parameters.

logic diagram (positive logic)

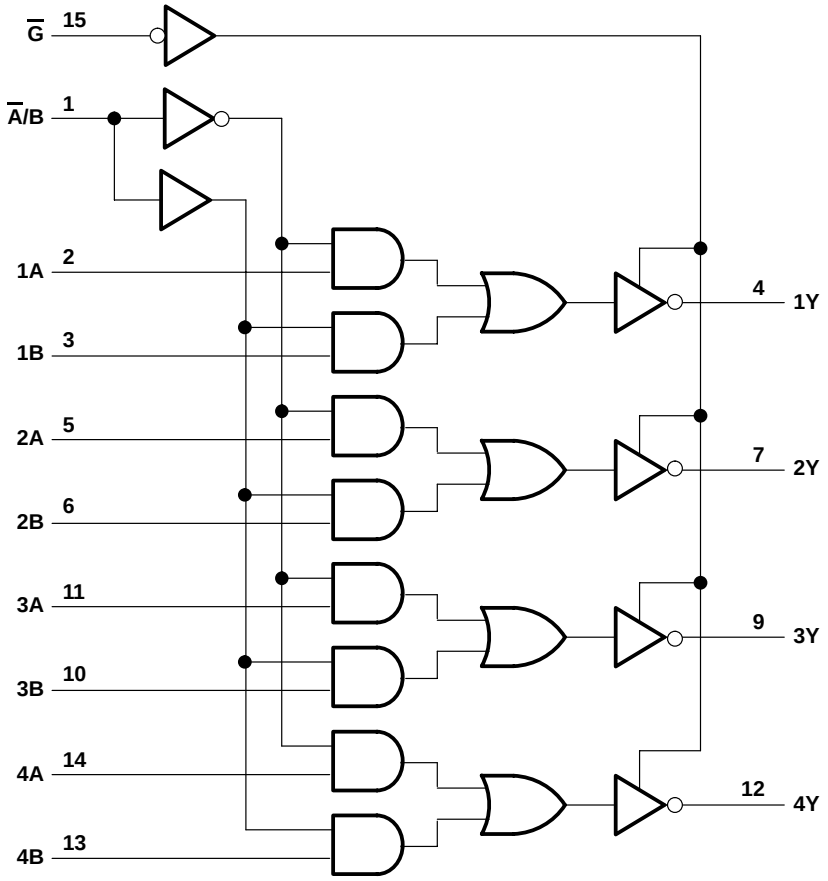

absolute maximum ratings over operating free-air temperature range (unless otherwise noted)†

Supply voltage range, V_{CC} . . . . . –0.5 V to 7 V
Input clamp current, I_{IK} ($V_I < 0$ or $V_I > V_{CC}$) (see Note 1) . . . . . ±20 mA
Output clamp current, I_{OK} ($V_O < 0$ or $V_O > V_{CC}$) (see Note 1) . . . . . ±20 mA
Continuous output drain current per output, I_O ($V_O = 0$ to V_{CC}) . . . . . ±35 mA
Continuous output source or sink current per output, I_O ($V_O = 0$ to V_{CC}) . . . . . ±25 mA
Continuous current through V_{CC} or GND . . . . . ±50 mA
Package thermal impedance, θ_{JA} (see Note 2): E package . . . . . 69°C/W
Storage temperature range, T_{stg} . . . . . –65°C to 150°C

† Stresses beyond those listed under “absolute maximum ratings” may cause permanent damage to the device. These are stress ratings only, and functional operation of the device at these or any other conditions beyond those indicated under “recommended operating conditions” is not implied. Exposure to absolute-maximum-rated conditions for extended periods may affect device reliability.

NOTES: 1. The input and output voltage ratings may be exceeded if the input and output current ratings are observed.
2. The package thermal impedance is calculated in accordance with JESD 51-7.

recommended operating conditions (see Note 3)

		MIN	MAX	UNIT
V_{CC}	Supply voltage	4.5	5.5	V
V_{IH}	High-level input voltage	2		V
V_{IL}	Low-level input voltage		0.8	V
V_I	Input voltage		V_{CC}	V
V_O	Output voltage		V_{CC}	V
$\Delta t/\Delta v$	Input transition rise or fall rate		500	ns
T_A	Operating free-air temperature	–55	125	°C

NOTE 3: All unused inputs of the device must be held at V_{CC} or GND to ensure proper device operation. Refer to the TI application report, *Implications of Slow or Floating CMOS Inputs*, literature number SCBA004.

electrical characteristics over recommended operating free-air temperature range (unless otherwise noted)

PARAMETER	TEST CONDITIONS		V_{CC}	T_A = 25°C		T_A = –55°C TO 125°C		T_A = –40°C TO 85°C		UNIT
				MIN	MAX	MIN	MAX	MIN	MAX	
V_{OH}	$V_I = V_{IH}$ or V_{IL}	I_{OH} = –20 μA	4.5 V	4.4		4.4		4.4		V
		I_{OH} = –6 mA		3.98		3.7		3.84		
V_{OL}	$V_I = V_{IH}$ or V_{IL}	I_{OL} = 20 μA	4.5 V		0.1		0.1		0.1	V
		I_{OL} = 6 mA			0.26		0.4		0.33	
I_I	$V_I = V_{CC}$ or 0		5.5 V		±0.1		±1		±1	μA
I_{OZ}	$V_O = V_{CC}$ or 0		5.5 V		±0.5		±10		±5	μA
I_{CC}	$V_I = V_{CC}$ or 0,	I_O = 0	5.5 V		8		160		80	μA
ΔI_{CC}†	One input at V_{CC} – 2.1 V, Other inputs at 0 or V_{CC}		4.5 V to 5.5 V	100	360		490		450	μA
C_i					10		10		10	pF
C_o					20		20		20	pF

† Additional quiescent supply current per input pin, TTL inputs high, 1 unit load. For dual-supply systems, theoretical worst-case (V_I = 2.4 V, V_{CC} = 5.5 V) specification is 1.8 mA.

HCT INPUT LOADING TABLE

INPUT	UNIT LOAD
$\overline{G}$	1.5
A or B	0.5
$\overline{A}$/B	1.5

Unit Load is ΔI_{CC} limit specified in electrical characteristics table (e.g., 360 μA max at 25°C).

switching characteristics over recommended operating free-air temperature range (unless otherwise noted) (see Figure 1)

PARAMETER	FROM (INPUT)	TO (OUTPUT)	LOAD CAPACITANCE	V_{CC}	T_A = 25°C			T_A = –55°C TO 125°C		T_A = –40°C TO 85°C		UNIT
					MIN	TYP	MAX	MIN	MAX	MIN	MAX	
t_{pd}	A or B	Any Y	C_L = 50 pF	4.5 V			27		41		34	ns
			C_L = 15 pF	5 V		11						
	$\overline{A}$/B	Any Y	C_L = 50 pF	4.5 V			34		51		43	
			C_L = 15 pF	5 V		14						
t_{en}	$\overline{G}$	Any Y	C_L = 50 pF	4.5 V			28		42		35	ns
			C_L = 15 pF	5 V		11						
t_{dis}	$\overline{G}$	Any Y	C_L = 50 pF	4.5 V			30		45		38	ns
			C_L = 15 pF	5 V		12						
t_t		Any Y	C_L = 50 pF				12		18		15	ns

operating characteristics, V_{CC} = 5 V, T_A = 25°C

PARAMETER		TYP	UNIT
C_{pd}	Power dissipation capacitance per multiplexer†	49	pF

† C_{pd} is used to determine the dynamic power consumption per multiplexer.
$P_D = V_{CC}^2 fi (C_{pd} + C_L)$
where: P_D = dynamic power dissipation
fi = input frequency
C_L = output load capacitance
V_{CC} = supply voltage

PARAMETER MEASUREMENT INFORMATION

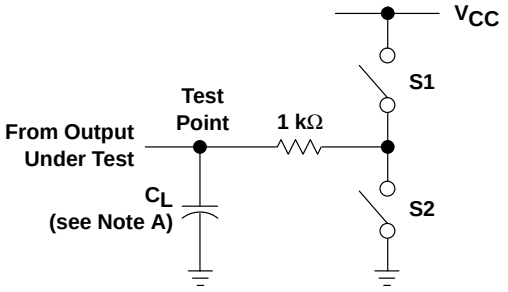

LOAD CIRCUIT

PARAMETER		S1	S2
t_{en}	t_{PZH}	Open	Closed
	t_{PZL}	Closed	Open
t_{dis}	t_{PHZ}	Open	Closed
	t_{PLZ}	Closed	Open
t_{pd} or t_t		Open	Open

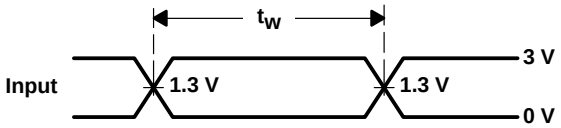

VOLTAGE WAVEFORMS
PULSE DURATION

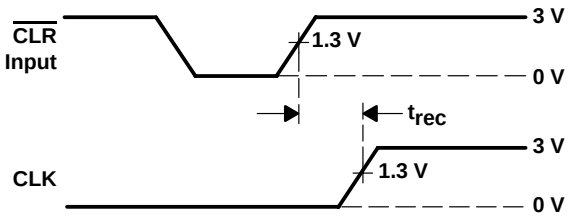

VOLTAGE WAVEFORMS
RECOVERY TIME

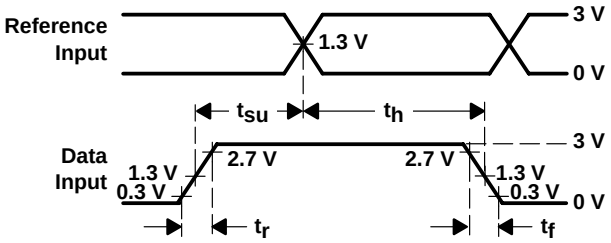

VOLTAGE WAVEFORMS
SETUP AND HOLD AND INPUT RISE AND FALL TIMES

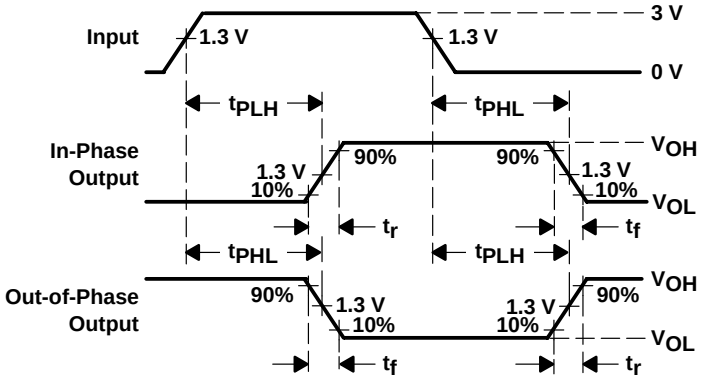

VOLTAGE WAVEFORMS
PROPAGATION DELAY AND OUTPUT TRANSITION TIMES

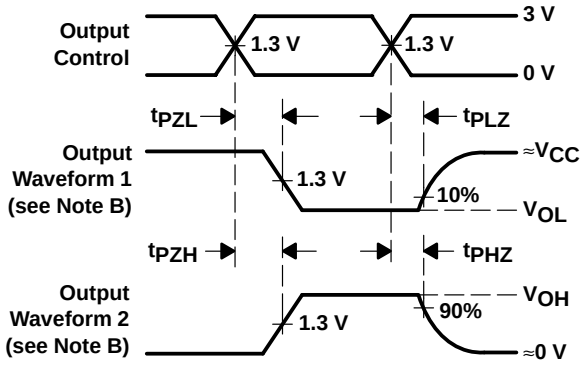

VOLTAGE WAVEFORMS
OUTPUT ENABLE AND DISABLE TIMES

NOTES: A. C_L includes probe and test-fixture capacitance.
B. Waveform 1 is for an output with internal conditions such that the output is low except when disabled by the output control. Waveform 2 is for an output with internal conditions such that the output is high except when disabled by the output control.
C. Phase relationships between waveforms were chosen arbitrarily. All input pulses are supplied by generators having the following characteristics: PRR ≤ 1 MHz, Z_O = 50 Ω, t_r = 6 ns, t_f = 6 ns.
D. For clock inputs, f_{max} is measured with the input duty cycle at 50%.
E. The outputs are measured one at a time with one input transition per measurement.
F. t_{PLZ} and t_{PHZ} are the same as t_{dis}.
G. t_{PZL} and t_{PZH} are the same as t_{en}.
H. t_{PLH} and t_{PHL} are the same as t_{pd}.

Figure 1. Load Circuit and Voltage Waveforms

PACKAGING INFORMATION

Orderable part number	Status (1)	Material type (2)	Package | Pins	Package qty | Carrier	RoHS (3)	Lead finish/ Ball material (4)	MSL rating/ Peak reflow (5)	Op temp (°C)	Part marking (6)
5962-8970801EA	Active	Production	CDIP (J) | 16	25 | TUBE	No	SNPB	N/A for Pkg Type	-55 to 125	5962-8970801EA CD54HCT258F3A
CD54HCT258F3A	Active	Production	CDIP (J) | 16	25 | TUBE	No	SNPB	N/A for Pkg Type	-55 to 125	5962-8970801EA CD54HCT258F3A
CD54HCT258F3A.A	Active	Production	CDIP (J) | 16	25 | TUBE	No	SNPB	N/A for Pkg Type	-55 to 125	5962-8970801EA CD54HCT258F3A
CD74HCT258E	Active	Production	PDIP (N) | 16	25 | TUBE	Yes	NIPDAU	N/A for Pkg Type	-55 to 125	CD74HCT258E
CD74HCT258E.A	Active	Production	PDIP (N) | 16	25 | TUBE	Yes	NIPDAU	N/A for Pkg Type	-55 to 125	CD74HCT258E

(1) **Status:** For more details on status, see our product life cycle.

(2) **Material type:** When designated, preproduction parts are prototypes/experimental devices, and are not yet approved or released for full production. Testing and final process, including without limitation quality assurance, reliability performance testing, and/or process qualification, may not yet be complete, and this item is subject to further changes or possible discontinuation. If available for ordering, purchases will be subject to an additional waiver at checkout, and are intended for early internal evaluation purposes only. These items are sold without warranties of any kind.

(3) **RoHS values:** Yes, No, RoHS Exempt. See the TI RoHS Statement for additional information and value definition.

(4) **Lead finish/Ball material:** Parts may have multiple material finish options. Finish options are separated by a vertical ruled line. Lead finish/Ball material values may wrap to two lines if the finish value exceeds the maximum column width.

(5) **MSL rating/Peak reflow:** The moisture sensitivity level ratings and peak solder (reflow) temperatures. In the event that a part has multiple moisture sensitivity ratings, only the lowest level per JEDEC standards is shown. Refer to the shipping label for the actual reflow temperature that will be used to mount the part to the printed circuit board.

(6) **Part marking:** There may be an additional marking, which relates to the logo, the lot trace code information, or the environmental category of the part.

Multiple part markings will be inside parentheses. Only one part marking contained in parentheses and separated by a "~" will appear on a part. If a line is indented then it is a continuation of the previous line and the two combined represent the entire part marking for that device.

Important Information and Disclaimer: The information provided on this page represents TI's knowledge and belief as of the date that it is provided. TI bases its knowledge and belief on information provided by third parties, and makes no representation or warranty as to the accuracy of such information. Efforts are underway to better integrate information from third parties. TI has taken and continues to take reasonable steps to provide representative and accurate information but may not have conducted destructive testing or chemical analysis on incoming materials and chemicals. TI and TI suppliers consider certain information to be proprietary, and thus CAS numbers and other limited information may not be available for release.

In no event shall TI's liability arising out of such information exceed the total purchase price of the TI part(s) at issue in this document sold by TI to Customer on an annual basis.

OTHER QUALIFIED VERSIONS OF CD54HCT258, CD74HCT258 :

- Catalog : CD74HCT258
- Military : CD54HCT258

NOTE: Qualified Version Definitions:

- Catalog - TI's standard catalog product
- Military - QML certified for Military and Defense Applications

TUBE

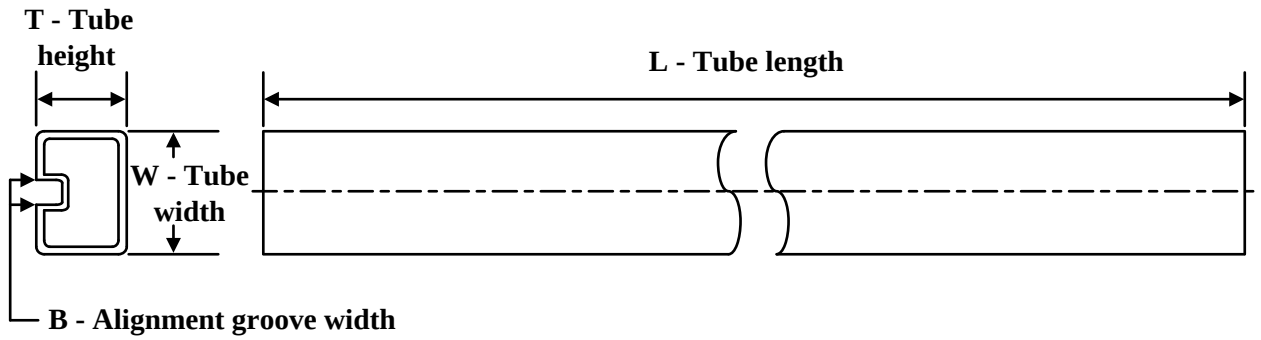

*All dimensions are nominal

Device	Package Name	Package Type	Pins	SPQ	L (mm)	W (mm)	T (µm)	B (mm)
CD74HCT258E	N	PDIP	16	25	506	13.97	11230	4.32
CD74HCT258E	N	PDIP	16	25	506	13.97	11230	4.32
CD74HCT258E.A	N	PDIP	16	25	506	13.97	11230	4.32
CD74HCT258E.A	N	PDIP	16	25	506	13.97	11230	4.32

J (R–GDIP–T**)

14 LEADS SHOWN

CERAMIC DUAL IN–LINE PACKAGE

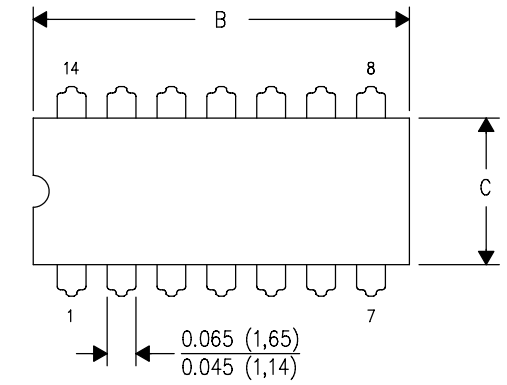

DIM \ PINS **	14	16	18	20
A	0.300 (7,62) BSC	0.300 (7,62) BSC	0.300 (7,62) BSC	0.300 (7,62) BSC
B MAX	0.785 (19,94)	.840 (21,34)	0.960 (24,38)	1.060 (26,92)
B MIN	—	—	—	—
C MAX	0.300 (7,62)	0.300 (7,62)	0.310 (7,87)	0.300 (7,62)
C MIN	0.245 (6,22)	0.245 (6,22)	0.220 (5,59)	0.245 (6,22)

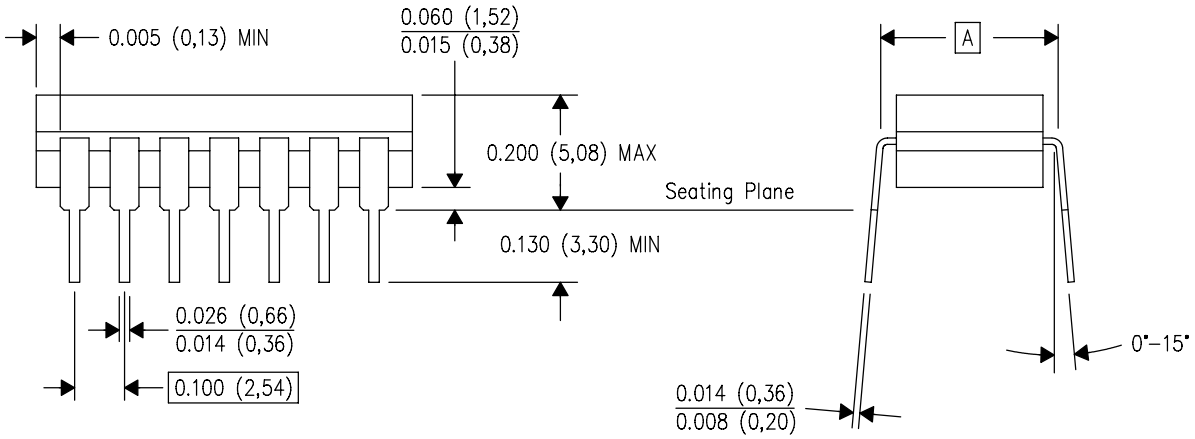

4040083/F 03/03

NOTES:
A. All linear dimensions are in inches (millimeters).
B. This drawing is subject to change without notice.
C. This package is hermetically sealed with a ceramic lid using glass frit.
D. Index point is provided on cap for terminal identification only on press ceramic glass frit seal only.
E. Falls within MIL STD 1835 GDIP1–T14, GDIP1–T16, GDIP1–T18 and GDIP1–T20.

N (R–PDIP–T**)

PLASTIC DUAL–IN–LINE PACKAGE

16 PINS SHOWN

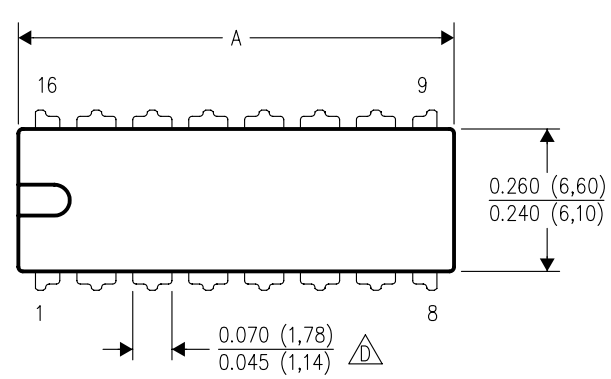

DIM \ PINS **	14	16	18	20
A MAX	0.775 (19,69)	0.775 (19,69)	0.920 (23,37)	1.060 (26,92)
A MIN	0.745 (18,92)	0.745 (18,92)	0.850 (21,59)	0.940 (23,88)
MS–001 VARIATION (C)	AA	BB	AC	AD

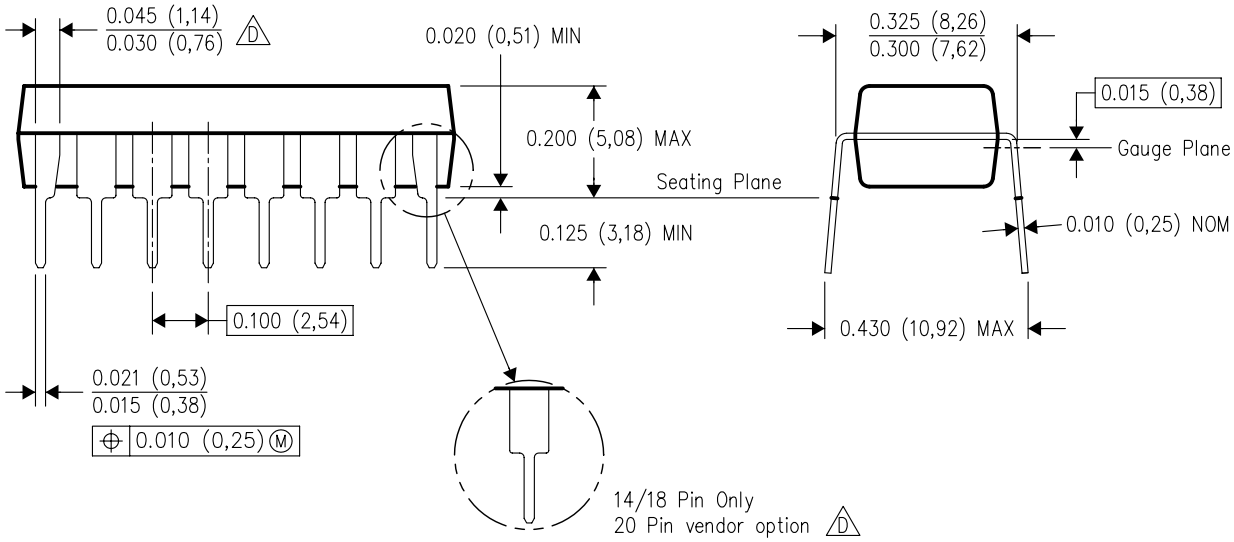

4040049/E 12/2002

NOTES:
A. All linear dimensions are in inches (millimeters).
B. This drawing is subject to change without notice.
C. Falls within JEDEC MS–001, except 18 and 20 pin minimum body length (Dim A).
D. The 20 pin end lead shoulder width is a vendor option, either half or full width.

IMPORTANT NOTICE AND DISCLAIMER

TI PROVIDES TECHNICAL AND RELIABILITY DATA (INCLUDING DATASHEETS), DESIGN RESOURCES (INCLUDING REFERENCE DESIGNS), APPLICATION OR OTHER DESIGN ADVICE, WEB TOOLS, SAFETY INFORMATION, AND OTHER RESOURCES “AS IS” AND WITH ALL FAULTS, AND DISCLAIMS ALL WARRANTIES, EXPRESS AND IMPLIED, INCLUDING WITHOUT LIMITATION ANY IMPLIED WARRANTIES OF MERCHANTABILITY, FITNESS FOR A PARTICULAR PURPOSE OR NON-INFRINGEMENT OF THIRD PARTY INTELLECTUAL PROPERTY RIGHTS.

These resources are intended for skilled developers designing with TI products. You are solely responsible for (1) selecting the appropriate TI products for your application, (2) designing, validating and testing your application, and (3) ensuring your application meets applicable standards, and any other safety, security, regulatory or other requirements.

These resources are subject to change without notice. TI grants you permission to use these resources only for development of an application that uses the TI products described in the resource. Other reproduction and display of these resources is prohibited. No license is granted to any other TI intellectual property right or to any third party intellectual property right. TI disclaims responsibility for, and you fully indemnify TI and its representatives against any claims, damages, costs, losses, and liabilities arising out of your use of these resources.

TI’s products are provided subject to TI’s Terms of Sale, TI’s General Quality Guidelines, or other applicable terms available either on ti.com or provided in conjunction with such TI products. TI’s provision of these resources does not expand or otherwise alter TI’s applicable warranties or warranty disclaimers for TI products. Unless TI explicitly designates a product as custom or customer-specified, TI products are standard, catalog, general purpose devices.

TI objects to and rejects any additional or different terms you may propose.

Copyright © 2026, Texas Instruments Incorporated

Last updated 10/2025