CDx4AC299, CD74AC323, CDx4ACT299 8-Lnput Universal Shift/Storage Register with Common Parallel I/O Pins

1 Features

Type Features

- Buffered inputs
- Typical propagation delay:

  6ns @ V_{CC} = 5V, T_A = 25°C, C_L = 50pF

Family Features

- SCR-Latchup-resistant CMOS process and circuit design
- Speed of bipolar FAST*/AS/S with significantly reduced power consumption
- Balanced propagation delays
- AC types feature 1.5V to 5.5V operation and balanced noise immunity at 30% of the supply
- ± 24mA output drive current
  - Fanout to 15 FAST* ICs
  - Drives 50ohm transmission lines

2 Description

The RCA CDx4AC299 and CD74AC323 and the CDx4ACT299 are 3-state, 8-input universal shift/storage registers with common parallel I/O pins.

Device Information

PART NUMBER	PACKAGE(1)	PACKAGE SIZE(2)	BODY SIZE(3)
CDx4AC(T)299/ CD74AC323	DW (SOIC, 20)	12.80mm × 10.3mm	12.80mm × 7.50mm

(1) For all available packages, see the orderable addendum at the end of the data sheet.
(2) The package size (length × width) is a nominal value and includes pins, where applicable.
(3) The body size (length × width) is a nominal value and does not include pins.

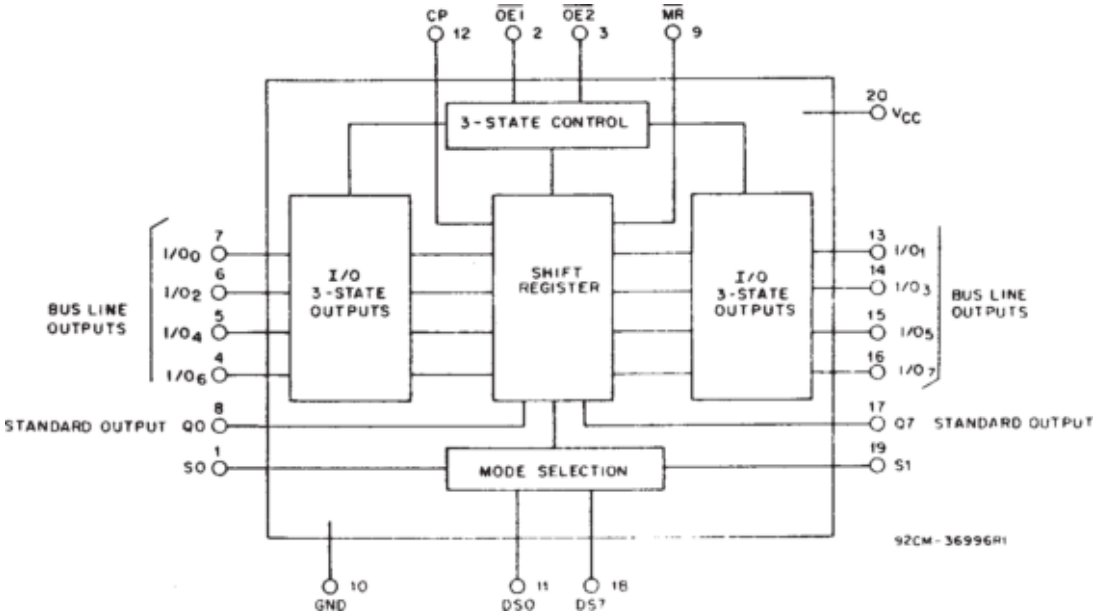

Functional Diagram

*FAST is a Registered Trademark of Fairchild Semiconductor Corp.

An IMPORTANT NOTICE at the end of this data sheet addresses availability, warranty, changes, use in safety-critical applications, intellectual property matters and other important disclaimers. PRODUCTION DATA.

Table of Contents

1 Features.....1
2 Description.....1
3 Pin Configuration and Functions.....3
4 Specifications.....4
4.1 Absolute Maximum Ratings.....4
4.2 ESD Ratings.....4
4.3 Recommended Operating Conditions:.....4
4.4 Thermal Information.....4
4.5 Static Electrical Characteristics, AC Series.....5
4.6 Static Electrical Characteristics, ACT Series.....6
4.7 Switching Characteristics, AC Series.....7
4.8 Switching Characteristics, ACT Series.....7
5 Parameter Measurement Information.....8
6 Detailed Description.....9
6.1 Overview.....9
6.2 Functional Block Diagram.....9
6.3 Device Functional Modes.....10
7 Application and Implementation.....11
7.1 Power Supply Recommendations.....11
7.2 Layout.....11
8 Device and Documentation Support.....13
8.1 Documentation Support (Analog).....13
8.2 Receiving Notification of Documentation Updates.....13
8.3 Support Resources.....13
8.4 Trademarks.....13
8.5 Electrostatic Discharge Caution.....13
8.6 Glossary.....13
9 Revision History.....13
10 Mechanical, Packaging, and Orderable Information.....14

Copyright © 2024 Texas Instruments Incorporated

3 Pin Configuration and Functions

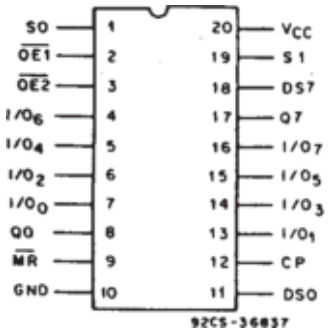

Figure 3-1. Terminal Assignment

Pin Functions

PIN		TYPE[1]	DESCRIPTION
NO.	NAME		
1	SO	I	Mode select 0
2	!OE1	I	Output enable, active low
3	!OE2	I	Output enable, active low
4	I/O6	O	Parallel data input/output
5	I/O4	O	Parallel data input/output
6	I/O2	O	Parallel data input/output
7	I/O0	O	Parallel data input/output
8	Q0	O	Serial output
9	!MR	I	Master reset, active low
10	GND	-	Ground
11	DSO	I	Serial data input
12	CP	I	Clock, rising edge triggered
13	I/O1	O	Parallel data input/output
14	I/O3	O	Parallel data input/output
15	I/O5	O	Parallel data input/output
16	I/O7	O	Parallel data input/output
17	Q7	O	Serial output
18	DS7	I	Serial data input
19	S1	I	Mode select
20	V_{CC}	-	Supply

(1) Signal Types: I = Input, O = Output, I/O = Input or Output

Copyright © 2024 Texas Instruments Incorporated

4 Specifications

4.1 Absolute Maximum Ratings

			MIN	MAX	UNIT
V_{CC}	Supply voltage range		-0.5	7	V
I_{IK}	Input diode current	(V_I < -0.5 V or V_I > V_{CC} ± 0.5 V)		±20	mA
I_{OK}	Output diode current	(V_O < -0.5 V or V_O > V_{CC} + 0.5 V)		±50	mA
I_O	Output source or sink current per output pin	(V_O > -0.5 V or V_O < V_{CC} + 0.5 V)		±50	mA
	V_{CC} or ground current, I_{CC} or I_{GND}			±100	mA (1)
T_A	Operating-temperature range		-55	+125	°C
T_{stg}	Storage temperature		-65	+150	°C

(1) For up to 4 outputs per device; add ± 25 mA for each additional output.

4.2 ESD Ratings

			VALUE	UNIT
$V_{(ESD)}$	Electrostatic discharge	Human body model (HBM), per ANSI/ESDA/JEDEC JS-001(1)	±2000	V

(1) JEDEC document JEP155 states that 500-V HBM allows safe manufacturing with a standard ESD control process.

4.3 Recommended Operating Conditions:

For maximum reliability, normal operating conditions should be selected so that operation is always within the following ranges:

		MIN	MAX	UNIT
V_{CC} (1)	Supply-Voltage : (For T_A = Full Package-Temperature Range)			
	AC Types	1.5	5.5	V
	ACT Types	4.5	5.5	V
V_I, V_O	Input or Output voltage	0	V_{CC}	V
T_A	Operating Temperature	-55	+125	°C
dt/dv	Input Rise and Fall Slew Rate			
	at 1.5 V to 3 V (AC Types)	0	50	ns/V
	at 3.6 V to 5.5 V (AC Types)	0	20	ns/V
	at 4.5 V to 5.5 V (ACT Types)	0	10	ns/V

(1) Unless otherwise specified, all voltages are referenced to ground.

4.4 Thermal Information

THERMAL METRIC(1)		CDx4AC(T)299/ CD74AC323 DW (SOIC, 20) 20 PINS	UNIT
$R_{\theta JA}$	Junction-to-ambient thermal resistance	40	°C/W

(1) For more information about traditional and new thermal metrics, see the *Semiconductor and IC Package Thermal Metrics* application report, SPRA953.

Copyright © 2024 Texas Instruments Incorporated

4.5 Static Electrical Characteristics, AC Series

CHARACTERISTICS		TEST CONDITIONS		V_{CC} (V)	AMBIENT TEMPERATURE (T_A) - °C						UNIT
					+25		-40 to+85		-55 to +125		
		V_I (V)	I_O (mA)		MIN	MAX	MIN	MAX	MIN	MAX	
V_{IH}	High-Level Input Voltage			1.5	1.2	—	1.2	—	1.2	—	V
				3	2.1	—	2.1	—	2.1	—	
				5.5	3.85	—	3.85	—	3.85	—	
V_{IL}	Low-Level Input Voltage			1 5	—	0.3	—	0.3	—	0.3	V
				3	—	0.9	—	0.9	—	0.9	
				5.5	—	1.65	—	1.65	—	1.65	
V_{OH}	High-Level Output Voltage	V_{IH} or V_{IL}	-0.05	1.5	1.4	—	1.4	—	1.4	—	V
			-0.05	3	2.9	—	2.9	—	2.9	—	
			-0.05	4.5	4.4	—	4.4	—	4.4	—	
			-4	3	2.58	—	2.48	—	2.4	—	
			-24	4.5	3.94	—	3.8	—	3.7	—	
		(1), (2)	-75	5.5	—	—	3.85	—	—	—	
			-50	5.5	—	—	—	—	3.85	—	
V_{OL}	Low-Level Output Voltage	V_{IH} or V_{IL}	0.05	1.5	—	0.1	—	0.1	—	0.1	V
			0.05	3	—	0.1	—	0.1	—	0.1	
			0.05	4.5	—	0.1	—	0.1	—	0.1	
			12	3	—	0.36	—	0.44	—	0.5	
			24	4.5	—	0.36	—	0.44	—	0.5	
		(1), (2)	75	5.5	—	—	—	1.65	—	—	
			50	5.5	—	—	—	—	—	1.65	
I_I	Input Leakage Current	V_{CC} or GND		5.5	—	±0.1	—	±1	—	±1	μA
I_{OZ}	3-Stage Leakage Current	V_{IH} or V_{IL} V_O= V_{CC} or GND		5.5	—	±0.5	—	±5	—	±10	μA
Ice	Quiescent Supply Current, MSI	V_{CC} or GND	0	5.5	—	8	—	80	—	160	μA

(1) Test one output at a time for a 1-second maximum duration. Measurement is made by forcing current and measuring voltage to minimize power dissipation.
(2) Test verifies a minimum 50-ohm transmission-line-drive capability at +85°C, 75 ohms at +125°C.

Copyright © 2024 Texas Instruments Incorporated

4.6 Static Electrical Characteristics, ACT Series

CHARACTERISTICS		TEST CONDITIONS		V_{CC} (V)	AMBIENT TEMPERATURE (T_A) - °C						UNIT
					+25		-40 to +85		-55 to +125		
		V_I (V)	I_O (mA)		MIN	MAX	MIN	MAX	MIN	MAX	
V_{IH}	High-Level Input Voltage			4.5 to 5.5	2	—	2	—	2	—	V
V_{IL}	Low-Level Input Voltage			4.5 to 5.5	—	0.8	—	0.8	—	0.8	V
V_{OH}	High-Level Output Voltage	V_{IH} or V_{IL}	-0.05	4.5	4.4	—	4.4	—	4.4	—	V
			-24	4.5	3.94	—	3.8	—	3.7	—	
		(1), (2)	-75	5.5	—	—	3.85	—	—	—	
			-50	5.5	—	—	—	—	3.85	—	
V_{OL}	Low-Level Output Voltage	V_{IH} or V_{IL}	0.05	4.5	—	0.1	—	0.1	—	0.1	V
			24	4.5	—	0.36	—	0.44	—	0.5	
		(1), (2)	75	5.5	—	—	—	1.65	—	—	
			50	5.5	—	—	—	—	—	1.65	
I_I	Input Leakage Current	V_{CC} or GND		5.5	—	±0.1	—	±1	—	±1	μA
I_{OZ}	3-State Leakage Current	V_{IH} or V_{IL} V_O V_{CC} or GND		5.5	—	±0.5	—	±5	—	±10	μA
I_{CC}	Quiescent Supply Current, MSI	V_{CC} or GND	0	5.5	—	8	—	80	—	160	μA
	Additional Quiescent Supply Current per Input Pin	V_{CC}-2.1		4.5 to 5.5	—	2.4	—	2.8	—	3	mA
ΔI_{CC}	TTL Inputs High										
	1 Unit Load										

(1) Test one output at a time for a 1-second maximum duration. Measurement is made by forcing current and measuring voltage to minimize power dissipation.
(2) Test verifies a minimum 50-ohm transmission-line-drive capability at +85°C, 75 ohms at + 125°C.

Table 4-1. Act Input Loading Table

INPUT	UNIT LOADS (1)	
	299	323
S1.S0, $\overline{OE1}$, $\overline{OE2}$	0.83	0.83
I/O_0 - I/O_7, CP, DS0, DS7	0.67	067
$\overline{MR}$	1.33	067

(1) Unit load is ΔI_{CC} limit specified in Static Characteristics Chart, e.g., 2.4 mA max. @ 25°C.

Copyright © 2024 Texas Instruments Incorporated

4.7 Switching Characteristics, AC Series

t_r, t_f = 3 ns, C_L = 50 pF

SYMBOL	CHARACTERISTICS	V_{CC} (V)	AMBIENT TEMPERATURE (T_A) - °C				UNIT
			-40 to +85		-55 to +125		
			MIN	MAX	MIN	MAX	
t_{PLH} t_{PHL}	Propagation Delays: CP to Q0, Q7	1.5	—	147	—	162	ns
		3.3 (1)	4.7	16.5	4.5	18.1	
		5 (2)	3.3	11.7	3.2	12.9	
t_{PLH} t_{PHL}	CP to (I/O)n	1.5	—	154	—	169	ns
		3.3	4.9	17.2	4.7	18.9	
		5	3.5	12.3	3.4	13.5	
t_{PLH} t_{PHL}	$\overline{MR}$ to Q0, Q7 (299 only)	1.5	—	127	—	140	ns
		3.3	4	14.3	3.9	15.7	
		5	2.9	10.2	2.8	11.2	
t_{PLH} t_{PHL}	$\overline{MR}$ to (I/O)n	1.5	—	158	—	174	ns
		3.3	5	17.7	4.9	19.5	
		5	3.6	12.6	3.5	13.9	
t_{PZL} t_{PZH} t_{PLZ} t_{PHZ}	Enable and Disable Times	1.5		169		186	ns
		3.3	5.8	20.4	5.6	22.4	
		5	3.8	13.5	3.7	14.9	
C_{pd} (3)	Power Dissipation Capacitance	—	280 Typ.		280 Typ.		pF
C_I	Input Capacitance	—	—	10	—	10	pF
C_O	3-State Output Capacitance	—	—	15	—	15	pF

(1) 3.3 V: min. is @ 3.6 V
(2) 5 V: min. is @ 5.5 V
(3) C_{pd} is used to determine the dynamic power consumption, per function.

4.8 Switching Characteristics, ACT Series

t_r, t_f = 3 ns, C_L = 50 pF

SYMBOL	CHARACTERISTICS	V_{CC} (V)	AMBIENT TEMPERATURE (T_A) - °C				UNIT
			-40 to +85		-55 to +125		
			MIN	MAX	MIN	MAX	
t_{PLH} t_{PHL}	Propagation Delays: CP to Q0, Q7	5(1)	3.3	11.7	3.2	12.9	ns
t_{PLH} t_{PHL}	CP to (I/O)n	5	3.7	13.2	3.6	14.5	ns
t_{PLH} t_{PHL}	$\overline{MR}$ to Q0, Q7 (299 only)	5	3.1	11.1	3.1	12.2	ns
t_{PLH} t_{PHL}	$\overline{MR}$ to (I/O)n	5	4.8	16.9	4.7	18.6	ns
t_{PLZ} t_{PHZ} t_{PZL} t_{PZH}	Enable and Disable Times	5	3.8	13.5	3.7	14.9	ns
C_{PD}§	Power Dissipation Capacitance	—	280 Typ.		280 Typ.		pF
C_I	Input Capacitance	—	—	10	—	10	pF
C_O	3-State Output Capacitance	—	—	15	—	15	pF

(1) 5 V: min. is @ 5.5 V

Copyright © 2024 Texas Instruments Incorporated

5 Parameter Measurement Information

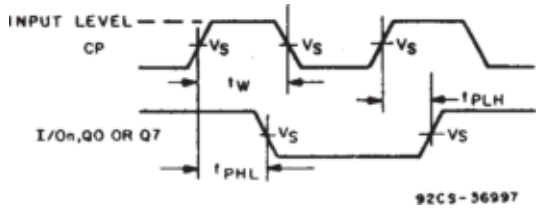

Figure 5-1. Clock Prerequisite and Propagation Delays

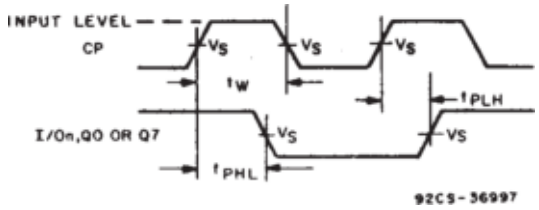

Figure 5-2. Clock Prerequisite and Propagation Delays

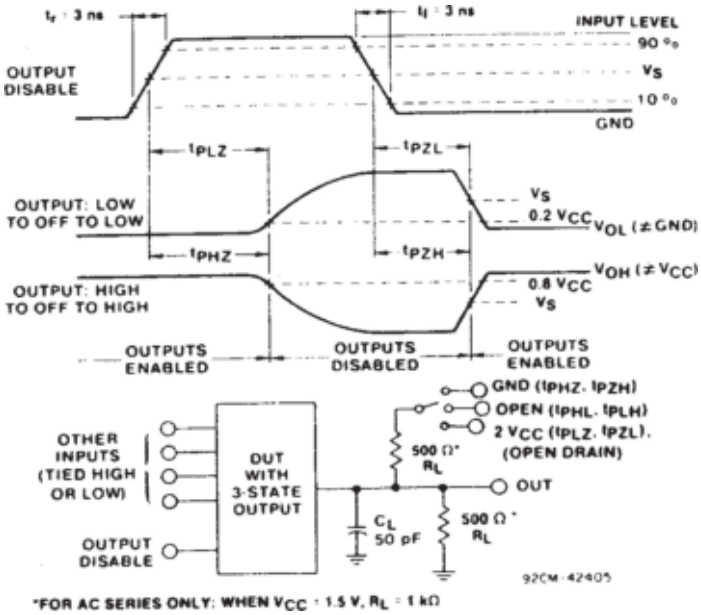

Figure 5-3. Three-state Propagation Delay Times and Test Circuit

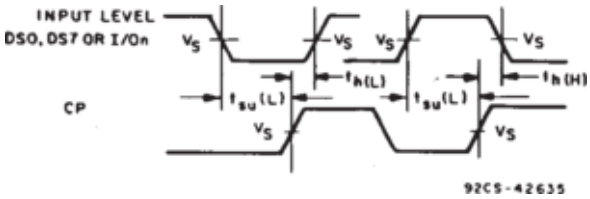

Figure 5-4. Data Prerequisite Times

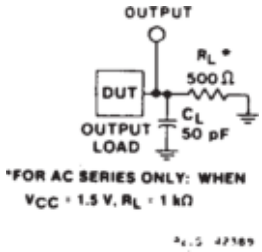

Figure 5-5. Test Circuit

	CD54/74AC	CD54/74ACT
Input Level	V_{CC}	3 V
Input Switching Voltage, V_S	0.5 V_{CC}	1.5 V
Output Switching Voltage, V_S	0.5 V_{CC}	0.5 V_{CC}

Copyright © 2024 Texas Instruments Incorporated

6 Detailed Description

6.1 Overview

The RCA CD54/74AC299 and CD54/74AC323 and the CD54/74ACT299 and CD54/74ACT323 are 3-state, 8-input universal shift/storage registers with common parallel I/O pins. These devices use the RCA ADVANCED CMOS technology. These registers have four synchronous-operating modes controlled by the two select inputs as shown in the Mode Select (S0, S1) table. The Mode Select, the Serial Data (DSO, DS7), and the Parallel Data (I/O_0 - I/O_7) respond only to the LOW-TO-HIGH transition of the clock (CP) pulse. S0, S1 and Data inputs must be present one setup time prior to the positive transition of the clock.

With the CD54/74AC/ACT299, the Master Reset ($\overline{MR}$) is an asynchronous active-LOW input. When $\overline{MR}$ is LOW, the register is cleared regardless of the status of all other inputs With the CD54/74AC/ACT323, the Master Reset ($\overline{MR}$) clears the register in sync with the clock input. The register can be expanded by cascading same units by tying the serial output (QO) to the serial data (DS7) input of the preceding register, and tying the serial output (Q7) to the serial data (DSO) input of the following register. Recirculating the (n x 8) bits is accomplished by tying the Q7 of the last stage to the DSO of the first stage.

The 3-state input/output (I/O) port has three modes of operation:

1. Both Output Enable ($\overline{OE1}$ and $\overline{OE2}$) inputs are LOW and S0 or S1 or both are LOW; the data in the register is present at the eight outputs.
2. When both S0 and S1 are HIGH, I/O terminals are in the high-impedance state but being input ports, ready for parallel data to be loaded into eight registers with one clock transition regardless of the status of $\overline{OE1}$ and $\overline{OE2}$.
3. Either one of the two Output Enable inputs being HIGH will force I/O terminals to be in the off state. It is noted that each I/O terminal is a 3-state output and a CMOS buffer input.

The CD74AC/ACT299 and CD74AC/ACT323 are supplied in 20-lead dual-in-line plastic packages (E suffix) and in 20-lead dual-in-line small-outline plastic packages (M suffix). Both package types are operable over the following temperature ranges: Commercial (0 to 70°C); Industrial (-40 to +85° C); and Extended Industrial/ Military (-55 to +125° C).

The CD54AC/ACT299 and CD54AC/ACT323, available in chip form (H suffix), are operable over the -55 to +125°C temperature range.

6.2 Functional Block Diagram

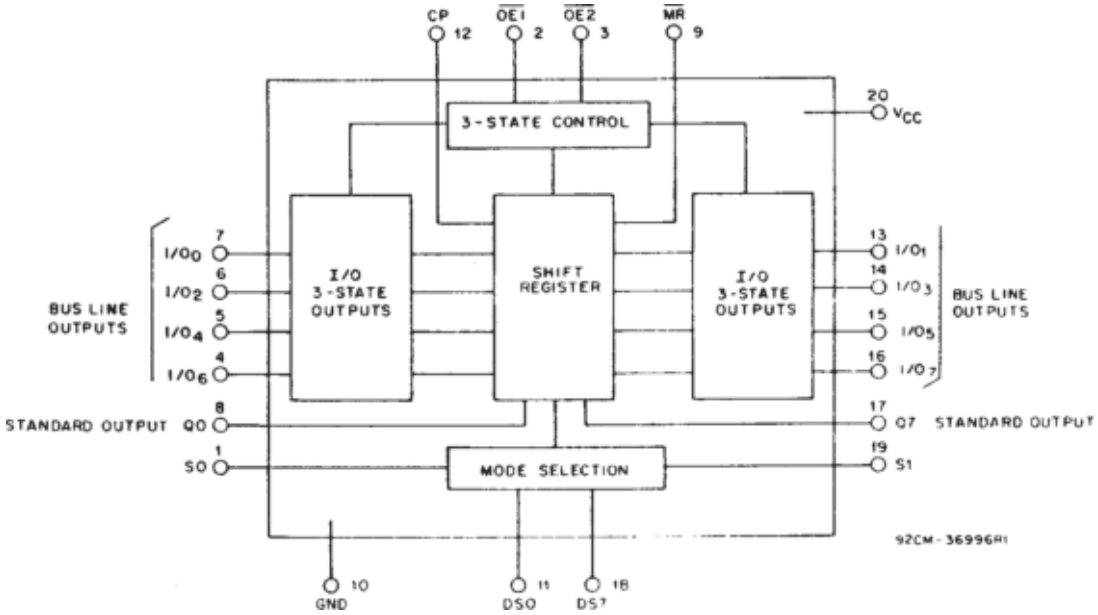

Figure 6-1. Functional Diagram

6.3 Device Functional Modes

FUNCTION	INPUTS							REGISTER OUTPUTS				
	$\overline{MR}$	CP	S0	S1	DS0	DS7	I/O_n	Q0	Q1	…	Q6	Q7
Reset (Clear)	L	X[1]	X	X	X	X	X	L	L	…	L	L
Shift Right	H	↑	h	l	l	X	X	L	q_0	…	q_5	q_6
	H	↑	h	l	h	X	X	H	q_0	…	q_5	q_6
Shift Left	H	↑	l	h	X	l	X	q_1	q_2	…	q_7	L
	H	↑	l	h	X	h	X	q_1	q_2	…	q_7	H
Hold (do nothing)	H	↑	l	l	X	X	X	q_0	q_1	…	q_6	q_7
Parallel Load	H	↑	h	h	X	X	l	L	L	…	L	L
	H	↑	h	h	X	X	h	H	H	…	H	H

Table 6-1. Mode Select

Function table 3-state I/O port operating mode

FUNCTION	INPUTS					INPUTS/OUTPUTS
	$\overline{OE1}$	$\overline{OE2}$	S0	S1	Qn (Register)	I/O_0 I/O_7
Read Register	L	L	L	X	L	L
	L	L	L	X	H	H
	L	L	X	L	L	L
	L	L	X	L	H	H
Load Register	X	X	H	H	Qn = I/O_n	I/O_n = Inputs
Disable I/O	H	X	X	X	X	(Z)
	X	H	X	X	X	(Z)

(1) H = Input voltage high level.

Copyright © 2024 Texas Instruments Incorporated

7 Application and Implementation

Note

Information in the following applications sections is not part of the TI component specification, and TI does not warrant its accuracy or completeness. TI's customers are responsible for determining suitability of components for their purposes, as well as validating and testing their design implementation to confirm system functionality.

7.1 Power Supply Recommendations

The power supply can be any voltage between the minimum and maximum supply voltage rating located in the *Recommended Operating Conditions*. Each V_{CC} terminal should have a good bypass capacitor to prevent power disturbance. A 0.1µF capacitor is recommended for this device. It is acceptable to parallel multiple bypass capacitors to reject different frequencies of noise. The 0.1µF and 1µF capacitors are commonly used in parallel. The bypass capacitor should be installed as close to the power terminal as possible for best results.

7.2 Layout

7.2.1 Layout Guidelines

- Bypass capacitor placement
  - Place near the positive supply terminal of the device
  - Provide an electrically short ground return path
  - Use wide traces to minimize impedance
  - Keep the device, capacitors, and traces on the same side of the board whenever possible
- Signal trace geometry
  - 8mil to 12mil trace width
  - Lengths less than 12cm to minimize transmission line effects
  - Avoid 90° corners for signal traces
  - Use an unbroken ground plane below signal traces
  - Flood fill areas around signal traces with ground
  - For traces longer than 12cm
    - Use impedance controlled traces
    - Source-terminate using a series damping resistor near the output
    - Avoid branches; buffer signals that must branch separately

7.2.2 Layout Example

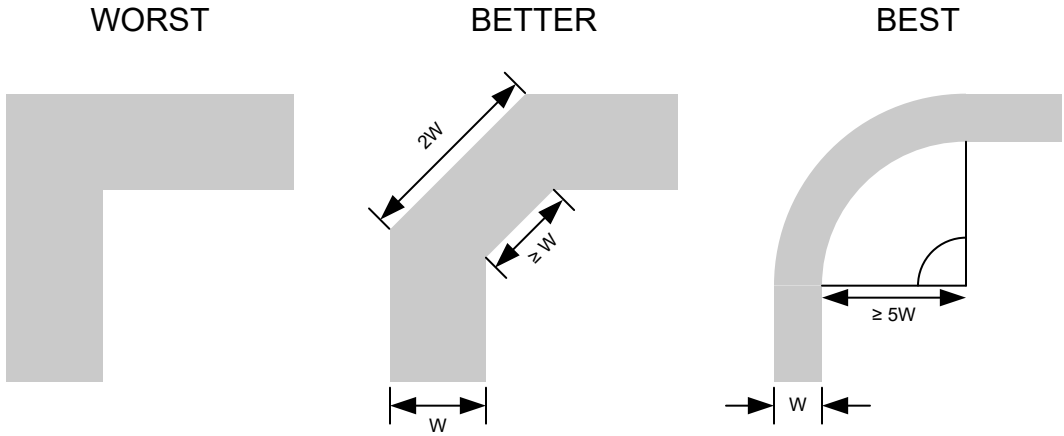

Figure 7-1. Example Trace Corners for Improved Signal Integrity

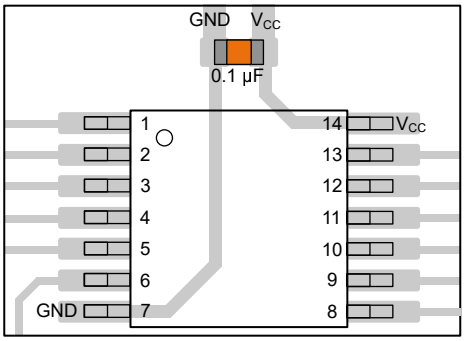

Figure 7-2. Example Bypass Capacitor Placement for TSSOP and Similar Packages

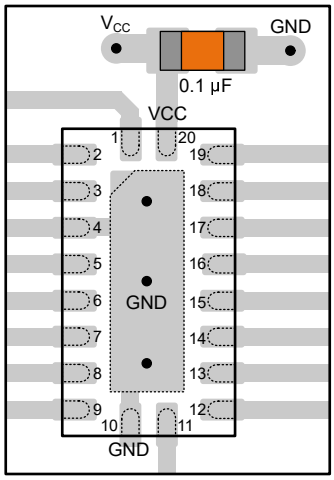

Figure 7-3. Example Bypass Capacitor Placement for WQFN and Similar Packages

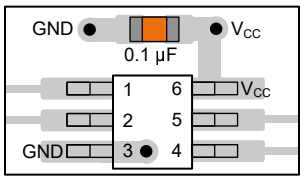

Figure 7-4. Example Bypass Capacitor Placement for SOT, SC70 and Similar Packages

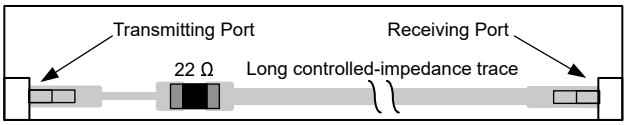

Figure 7-5. Example Damping Resistor Placement for Improved Signal Integrity

Copyright © 2024 Texas Instruments Incorporated

8 Device and Documentation Support

8.1 Documentation Support (Analog)

8.1.1 Related Documentation

The table below lists quick access links. Categories include technical documents, support and community resources, tools and software, and quick access to sample or buy.

Table 8-1. Related Links

PARTS	PRODUCT FOLDER	SAMPLE & BUY	TECHNICAL DOCUMENTS	TOOLS & SOFTWARE	SUPPORT & COMMUNITY
CD54AC299	Click here	Click here	Click here	Click here	Click here
CD74AC299	Click here	Click here	Click here	Click here	Click here
CD54ACT299	Click here	Click here	Click here	Click here	Click here
CD74ACT299	Click here	Click here	Click here	Click here	Click here
CD74AC323	Click here	Click here	Click here	Click here	Click here

8.2 Receiving Notification of Documentation Updates

To receive notification of documentation updates, navigate to the device product folder on ti.com. Click on *Subscribe to updates* to register and receive a weekly digest of any product information that has changed. For change details, review the revision history included in any revised document.

8.3 Support Resources

TI E2E™ support forums are an engineer's go-to source for fast, verified answers and design help — straight from the experts. Search existing answers or ask your own question to get the quick design help you need.

Linked content is provided "AS IS" by the respective contributors. They do not constitute TI specifications and do not necessarily reflect TI's views; see TI's Terms of Use.

8.4 Trademarks

TI E2E™ is a trademark of Texas Instruments.
All trademarks are the property of their respective owners.

8.5 Electrostatic Discharge Caution

This integrated circuit can be damaged by ESD. Texas Instruments recommends that all integrated circuits be handled with appropriate precautions. Failure to observe proper handling and installation procedures can cause damage.

ESD damage can range from subtle performance degradation to complete device failure. Precision integrated circuits may be more susceptible to damage because very small parametric changes could cause the device not to meet its published specifications.

8.6 Glossary

TI Glossary This glossary lists and explains terms, acronyms, and definitions.

9 Revision History

NOTE: Page numbers for previous revisions may differ from page numbers in the current version.

Changes from Revision * (April 2002) to Revision A (December 2024) **Page**

- Added *Applications* section, *Device Information* table, *Pin Functions* table, *ESD Ratings* table, *Thermal Information* table, *Device Functional Modes, Application and Implementation* section, *Device and Documentation Support* section, and *Mechanical, Packaging, and Orderable Information* section 1

10 Mechanical, Packaging, and Orderable Information

The following pages include mechanical, packaging, and orderable information. This information is the most current data available for the designated devices. This data is subject to change without notice and revision of this document. For browser-based versions of this data sheet, refer to the left-hand navigation.

Copyright © 2024 Texas Instruments Incorporated

PACKAGING INFORMATION

Orderable part number	Status (1)	Material type (2)	Package | Pins	Package qty | Carrier	RoHS (3)	Lead finish/ Ball material (4)	MSL rating/ Peak reflow (5)	Op temp (°C)	Part marking (6)
CD54AC299F3A	Active	Production	CDIP (J) | 20	20 | TUBE	No	SNPB	N/A for Pkg Type	-55 to 125	CD54AC299F3A
CD54AC299F3A.A	Active	Production	CDIP (J) | 20	20 | TUBE	No	SNPB	N/A for Pkg Type	-55 to 125	CD54AC299F3A
CD54ACT299F3A	Active	Production	CDIP (J) | 20	20 | TUBE	No	SNPB	N/A for Pkg Type	-55 to 125	CD54ACT299F3A
CD54ACT299F3A.A	Active	Production	CDIP (J) | 20	20 | TUBE	No	SNPB	N/A for Pkg Type	-55 to 125	CD54ACT299F3A
CD74AC299M96	Active	Production	SOIC (DW) | 20	2000 | LARGE T&R	Yes	NIPDAU	Level-1-260C-UNLIM	-55 to 125	AC299M
CD74AC299M96.A	Active	Production	SOIC (DW) | 20	2000 | LARGE T&R	Yes	NIPDAU	Level-1-260C-UNLIM	-55 to 125	AC299M
CD74AC323M	Active	Production	SOIC (DW) | 20	25 | TUBE	Yes	NIPDAU	Level-1-260C-UNLIM	-55 to 125	AC323M
CD74AC323M.A	Active	Production	SOIC (DW) | 20	25 | TUBE	Yes	NIPDAU	Level-1-260C-UNLIM	-55 to 125	AC323M
CD74ACT299M96	Active	Production	SOIC (DW) | 20	2000 | LARGE T&R	Yes	NIPDAU	Level-1-260C-UNLIM	-55 to 125	ACT299M
CD74ACT299M96.A	Active	Production	SOIC (DW) | 20	2000 | LARGE T&R	Yes	NIPDAU	Level-1-260C-UNLIM	-55 to 125	ACT299M

(1) **Status:** For more details on status, see our product life cycle.

(2) **Material type:** When designated, preproduction parts are prototypes/experimental devices, and are not yet approved or released for full production. Testing and final process, including without limitation quality assurance, reliability performance testing, and/or process qualification, may not yet be complete, and this item is subject to further changes or possible discontinuation. If available for ordering, purchases will be subject to an additional waiver at checkout, and are intended for early internal evaluation purposes only. These items are sold without warranties of any kind.

(3) **RoHS values:** Yes, No, RoHS Exempt. See the TI RoHS Statement for additional information and value definition.

(4) **Lead finish/Ball material:** Parts may have multiple material finish options. Finish options are separated by a vertical ruled line. Lead finish/Ball material values may wrap to two lines if the finish value exceeds the maximum column width.

(5) **MSL rating/Peak reflow:** The moisture sensitivity level ratings and peak solder (reflow) temperatures. In the event that a part has multiple moisture sensitivity ratings, only the lowest level per JEDEC standards is shown. Refer to the shipping label for the actual reflow temperature that will be used to mount the part to the printed circuit board.

(6) **Part marking:** There may be an additional marking, which relates to the logo, the lot trace code information, or the environmental category of the part.

Multiple part markings will be inside parentheses. Only one part marking contained in parentheses and separated by a "~" will appear on a part. If a line is indented then it is a continuation of the previous line and the two combined represent the entire part marking for that device.

Important Information and Disclaimer: The information provided on this page represents TI's knowledge and belief as of the date that it is provided. TI bases its knowledge and belief on information provided by third parties, and makes no representation or warranty as to the accuracy of such information. Efforts are underway to better integrate information from third parties. TI has taken and continues to take reasonable steps to provide representative

and accurate information but may not have conducted destructive testing or chemical analysis on incoming materials and chemicals. TI and TI suppliers consider certain information to be proprietary, and thus CAS numbers and other limited information may not be available for release.

In no event shall TI's liability arising out of such information exceed the total purchase price of the TI part(s) at issue in this document sold by TI to Customer on an annual basis.

OTHER QUALIFIED VERSIONS OF CD54AC299, CD54ACT299, CD74AC299, CD74ACT299 :

- Catalog : CD74AC299, CD74ACT299
- Military : CD54AC299, CD54ACT299

NOTE: Qualified Version Definitions:

- Catalog - TI's standard catalog product
- Military - QML certified for Military and Defense Applications

TAPE AND REEL INFORMATION

REEL DIMENSIONS

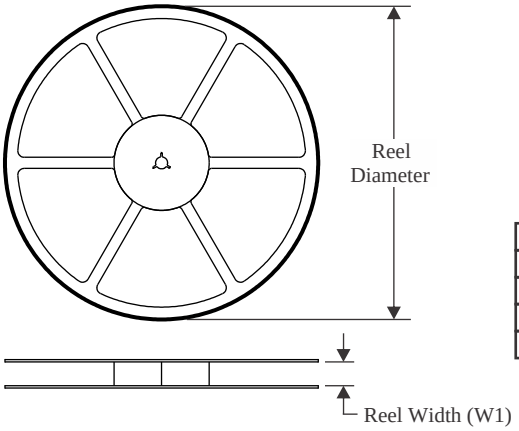

TAPE DIMENSIONS

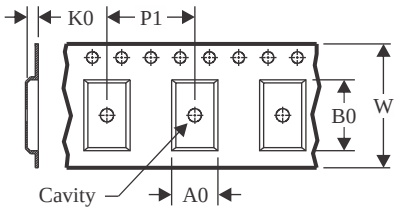

A0	Dimension designed to accommodate the component width
B0	Dimension designed to accommodate the component length
K0	Dimension designed to accommodate the component thickness
W	Overall width of the carrier tape
P1	Pitch between successive cavity centers

QUADRANT ASSIGNMENTS FOR PIN 1 ORIENTATION IN TAPE

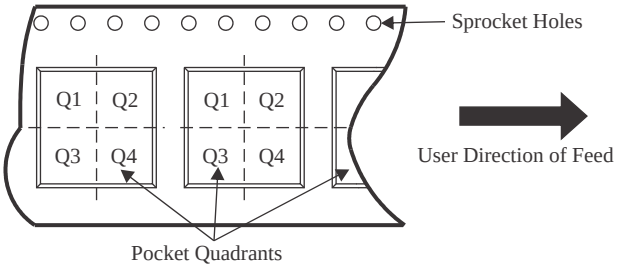

*All dimensions are nominal

Device	Package Type	Package Drawing	Pins	SPQ	Reel Diameter (mm)	Reel Width W1 (mm)	A0 (mm)	B0 (mm)	K0 (mm)	P1 (mm)	W (mm)	Pin1 Quadrant
CD74AC299M96	SOIC	DW	20	2000	330.0	24.4	10.8	13.3	2.7	12.0	24.0	Q1
CD74ACT299M96	SOIC	DW	20	2000	330.0	24.4	10.8	13.3	2.7	12.0	24.0	Q1

TAPE AND REEL BOX DIMENSIONS

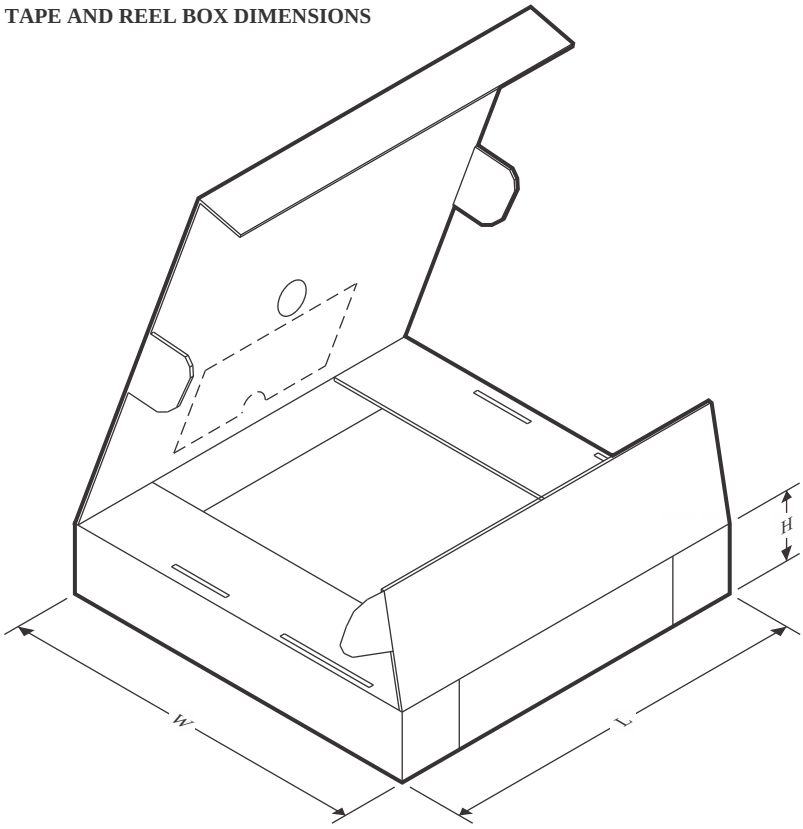

*All dimensions are nominal

Device	Package Type	Package Drawing	Pins	SPQ	Length (mm)	Width (mm)	Height (mm)
CD74AC299M96	SOIC	DW	20	2000	356.0	356.0	45.0
CD74ACT299M96	SOIC	DW	20	2000	356.0	356.0	45.0

TUBE

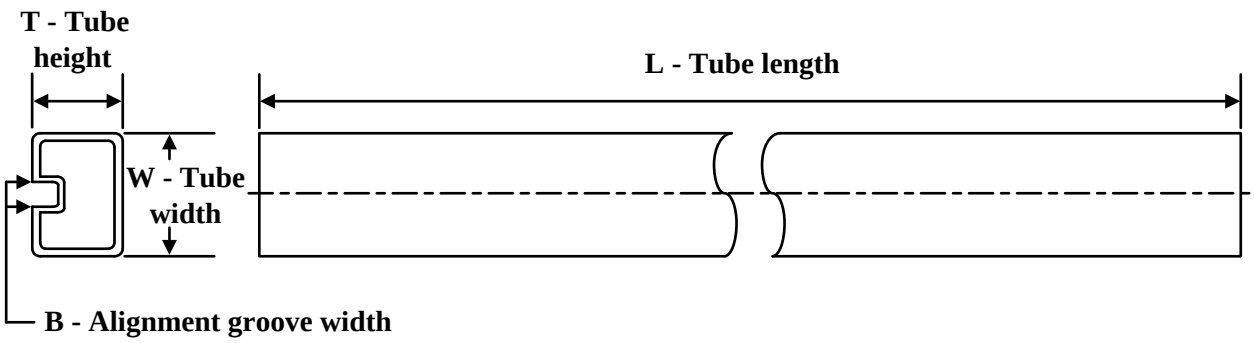

*All dimensions are nominal

Device	Package Name	Package Type	Pins	SPQ	L (mm)	W (mm)	T (µm)	B (mm)
CD74AC323M	DW	SOIC	20	25	507	12.83	5080	6.6
CD74AC323M.A	DW	SOIC	20	25	507	12.83	5080	6.6

J (R–GDIP–T**) CERAMIC DUAL IN–LINE PACKAGE

14 LEADS SHOWN

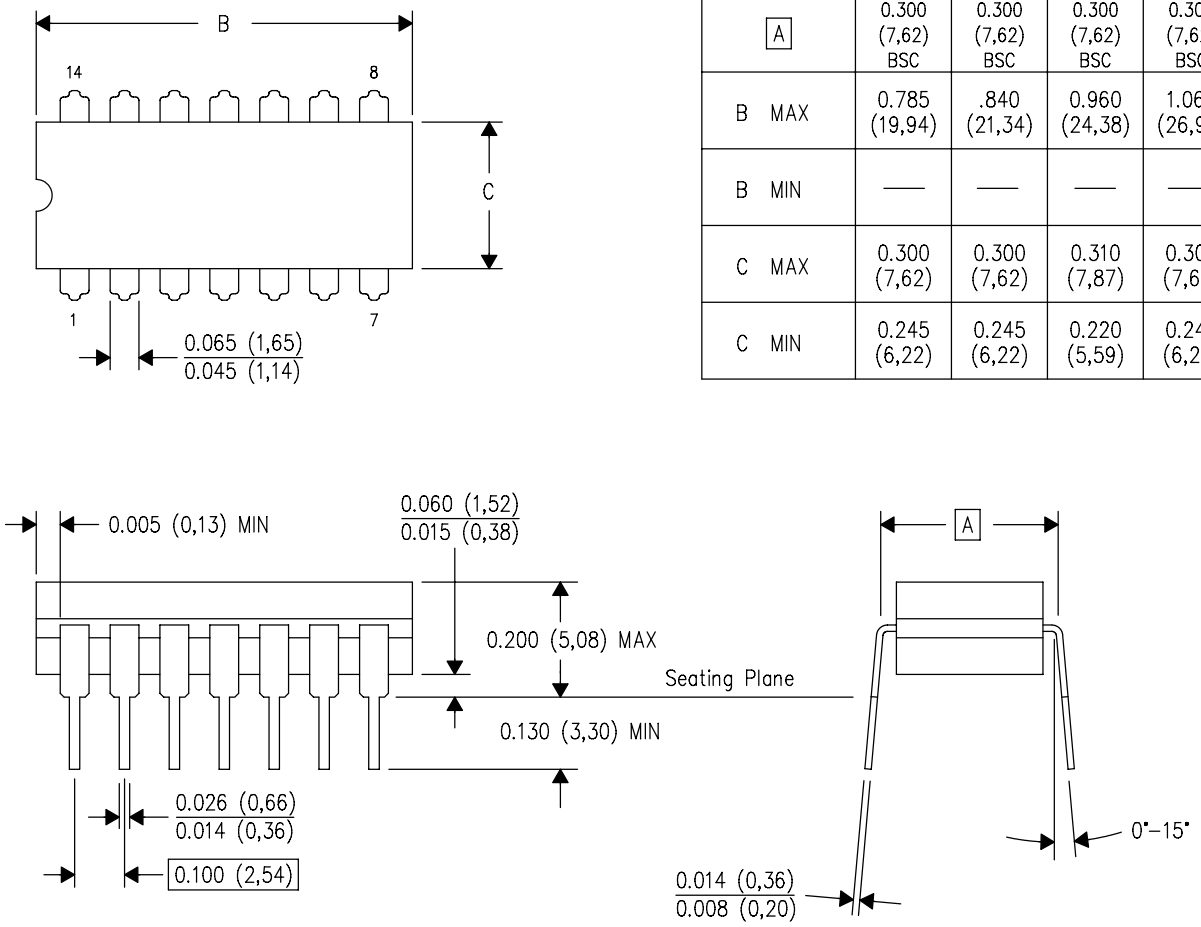

DIM \ PINS **	14	16	18	20
A	0.300 (7,62) BSC	0.300 (7,62) BSC	0.300 (7,62) BSC	0.300 (7,62) BSC
B MAX	0.785 (19,94)	.840 (21,34)	0.960 (24,38)	1.060 (26,92)
B MIN	—	—	—	—
C MAX	0.300 (7,62)	0.300 (7,62)	0.310 (7,87)	0.300 (7,62)
C MIN	0.245 (6,22)	0.245 (6,22)	0.220 (5,59)	0.245 (6,22)

4040083/F 03/03

NOTES:
A. All linear dimensions are in inches (millimeters).
B. This drawing is subject to change without notice.
C. This package is hermetically sealed with a ceramic lid using glass frit.
D. Index point is provided on cap for terminal identification only on press ceramic glass frit seal only.
E. Falls within MIL STD 1835 GDIP1–T14, GDIP1–T16, GDIP1–T18 and GDIP1–T20.

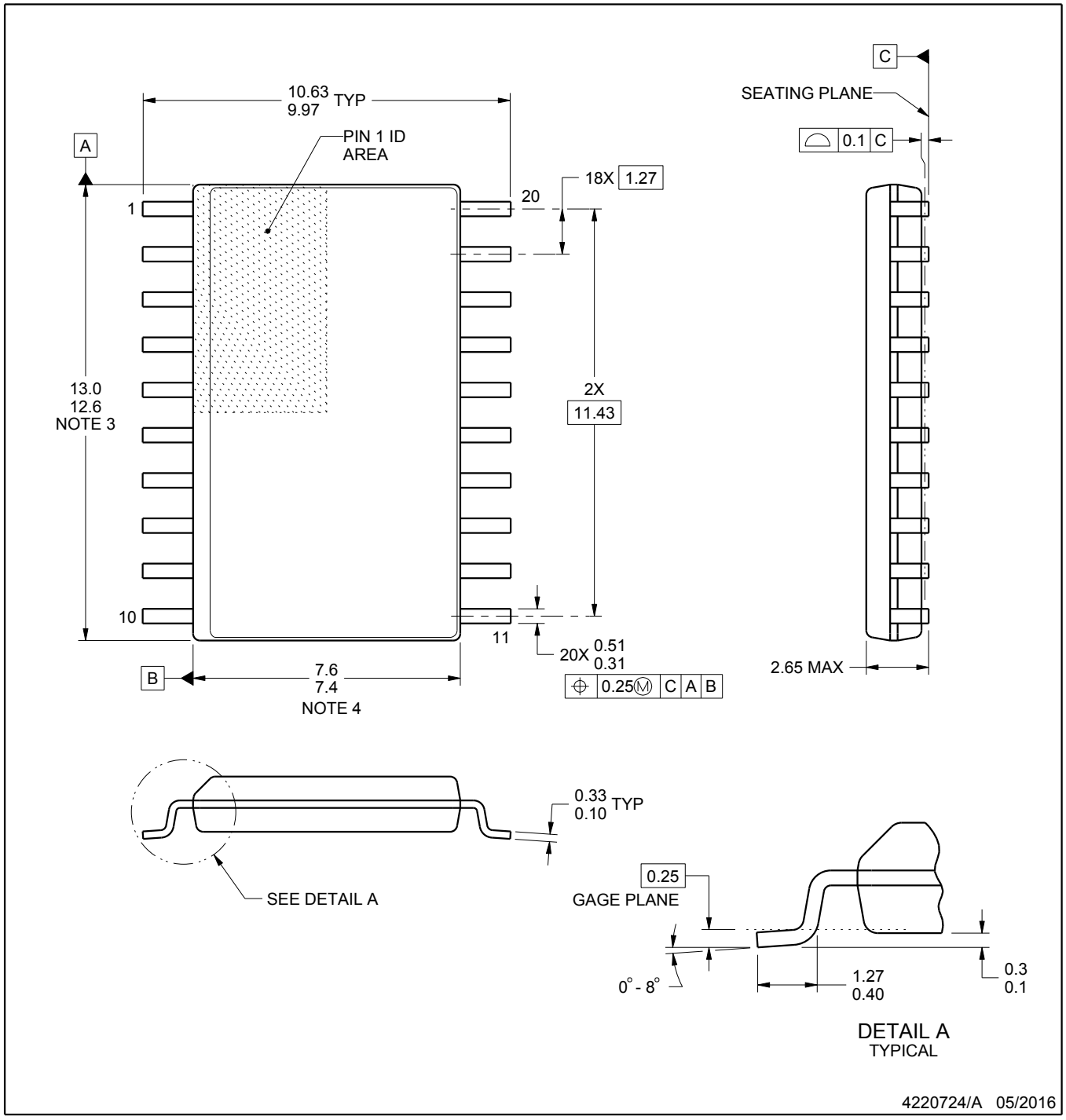

NOTES:

1. All linear dimensions are in millimeters. Dimensions in parenthesis are for reference only. Dimensioning and tolerancing per ASME Y14.5M.
2. This drawing is subject to change without notice.
3. This dimension does not include mold flash, protrusions, or gate burrs. Mold flash, protrusions, or gate burrs shall not exceed 0.15 mm per side.
4. This dimension does not include interlead flash. Interlead flash shall not exceed 0.43 mm per side.
5. Reference JEDEC registration MS-013.

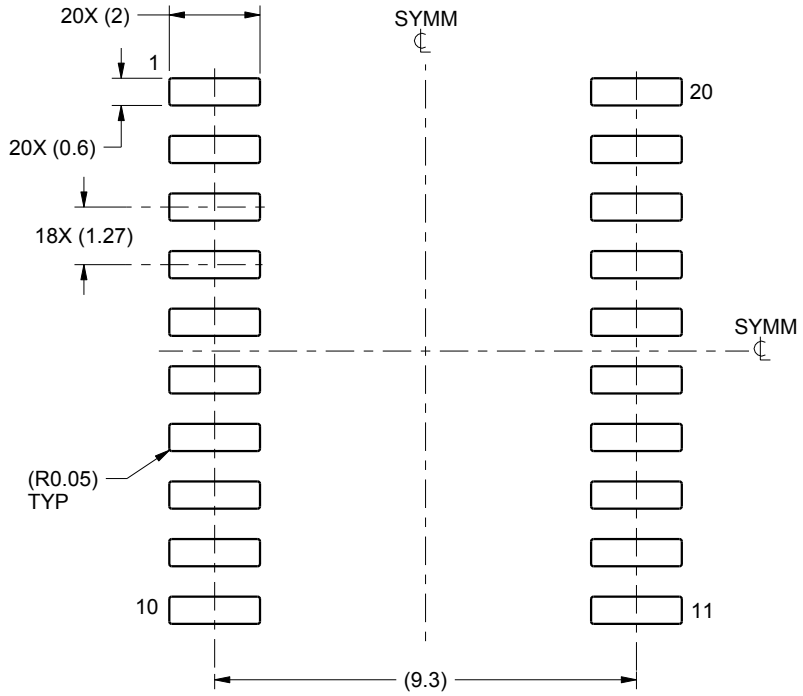

LAND PATTERN EXAMPLE
SCALE:6X

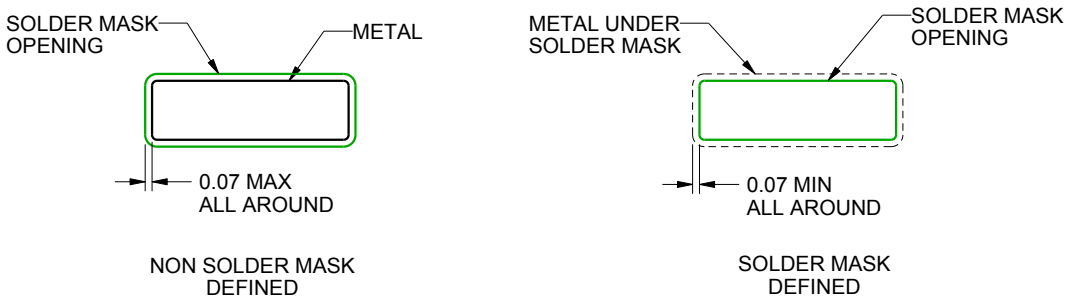

SOLDER MASK DETAILS

4220724/A 05/2016

NOTES: (continued)

6. Publication IPC-7351 may have alternate designs.
7. Solder mask tolerances between and around signal pads can vary based on board fabrication site.

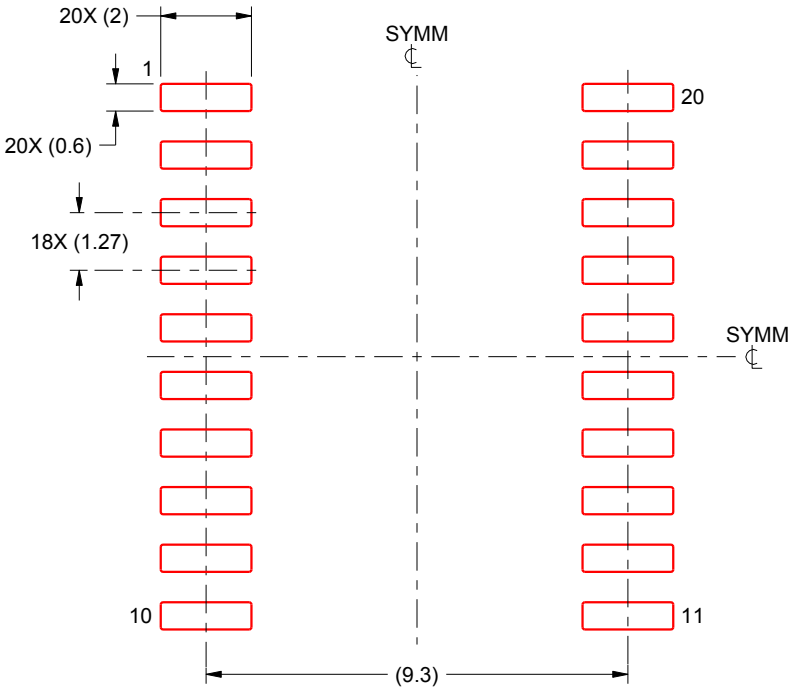

SOLDER PASTE EXAMPLE
BASED ON 0.125 mm THICK STENCIL
SCALE:6X

4220724/A 05/2016

NOTES: (continued)

8. Laser cutting apertures with trapezoidal walls and rounded corners may offer better paste release. IPC-7525 may have alternate design recommendations.
9. Board assembly site may have different recommendations for stencil design.

IMPORTANT NOTICE AND DISCLAIMER

TI PROVIDES TECHNICAL AND RELIABILITY DATA (INCLUDING DATASHEETS), DESIGN RESOURCES (INCLUDING REFERENCE DESIGNS), APPLICATION OR OTHER DESIGN ADVICE, WEB TOOLS, SAFETY INFORMATION, AND OTHER RESOURCES “AS IS” AND WITH ALL FAULTS, AND DISCLAIMS ALL WARRANTIES, EXPRESS AND IMPLIED, INCLUDING WITHOUT LIMITATION ANY IMPLIED WARRANTIES OF MERCHANTABILITY, FITNESS FOR A PARTICULAR PURPOSE OR NON-INFRINGEMENT OF THIRD PARTY INTELLECTUAL PROPERTY RIGHTS.

These resources are intended for skilled developers designing with TI products. You are solely responsible for (1) selecting the appropriate TI products for your application, (2) designing, validating and testing your application, and (3) ensuring your application meets applicable standards, and any other safety, security, regulatory or other requirements.

These resources are subject to change without notice. TI grants you permission to use these resources only for development of an application that uses the TI products described in the resource. Other reproduction and display of these resources is prohibited. No license is granted to any other TI intellectual property right or to any third party intellectual property right. TI disclaims responsibility for, and you fully indemnify TI and its representatives against any claims, damages, costs, losses, and liabilities arising out of your use of these resources.

TI’s products are provided subject to TI’s Terms of Sale, TI’s General Quality Guidelines, or other applicable terms available either on ti.com or provided in conjunction with such TI products. TI’s provision of these resources does not expand or otherwise alter TI’s applicable warranties or warranty disclaimers for TI products. Unless TI explicitly designates a product as custom or customer-specified, TI products are standard, catalog, general purpose devices.

TI objects to and rejects any additional or different terms you may propose.

Copyright © 2026, Texas Instruments Incorporated

Last updated 10/2025