CDx4ACT00 Quadruple 2-Input Positive-nand Gates

1 Features

- Inputs are TTL-voltage compatible
- Speed of bipolar F, AS, and S, with significantly reduced power consumption
- Balanced propagation delays
- ±24mA output drive current
  - Fanout to 15 F devices
- SCR-latchup-resistant CMOS process and circuit design
- Exceeds 2kV ESD protection per MIL-STD-883, method 3015

2 Description

The ‘ACT00 devices contain four independent 2-input NAND gates. Each gate performs the Boolean function of $Y = \overline{A \bullet B}$ in positive logic.

Device Information

PART NUMBER	PACKAGE(1)	PACKAGE SIZE(2)	BODY SIZE(3)
CDx4ACT00	D (SOIC, 14)	8.65mm × 6mm	8.65mm × 3.9mm
	N (PDIP, 14)	19.3mm × 9.4mm	19.3mm × 6.35mm
	J (CDIP, 14)	19.55mm x 7.9mm	19.55 mm x 6.7mm

(1) For more information, see Mechanical, Packaging, and Orderable Information.
(2) The package size (length × width) is a nominal value and includes pins, where applicable.
(3) The body size (length × width) is a nominal value and does not include pins.

Logic Diagram, Each Gate (Positive Logic)

An IMPORTANT NOTICE at the end of this data sheet addresses availability, warranty, changes, use in safety-critical applications, intellectual property matters and other important disclaimers. PRODUCTION DATA.

Table of Contents

1 Features....1
2 Description....1
3 Pin Configuration and Functions....3
4 Specifications....4
4.1 Absolute Maximum Ratings....4
4.2 ESD Ratings....4
4.3 Recommended Operating Conditions....4
4.4 Thermal Information....4
4.5 Electrical Characteristics....5
4.6 Switching Characteristics....5
4.7 Operating Characteristics....5
5 Parameter Measurement Information....6
6 Detailed Description....7
6.1 Functional Block Diagram....7
6.2 Device Functional Modes....7
7 Application and Implementation....8
7.1 Power Supply Recommendations....8
7.2 Layout....8
8 Device and Documentation Support....9
8.1 Documentation Support (Analog)....9
8.2 Receiving Notification of Documentation Updates....9
8.3 Support Resources....9
8.4 Trademarks....9
8.5 Electrostatic Discharge Caution....9
8.6 Glossary....9
9 Revision History....9
10 Mechanical, Packaging, and Orderable Information....9

Copyright © 2024 Texas Instruments Incorporated

3 Pin Configuration and Functions

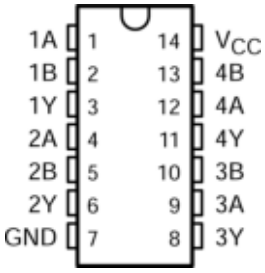

Figure 3-1. CD54ACT00 J Package, 14-Pin CDIP; CD74ACT00 N or D Package, 14-Pin PDIP or SOIC (Top View)

Table 3-1. Pin Functions

PIN		I/O	DESCRIPTION
NAME	SOIC, PDIP, CDIP		
1A	1	I	1A Input
1B	2	I	1B Input
1Y	3	O	1Y Output
2A	4	I	2A Input
2B	5	I	2B Input
2Y	6	O	2Y Output
3Y	8	O	3Y Output
3A	9	I	3A Input
3B	10	I	3B Input
4Y	11	O	4Y Output
4A	12	I	4A Input
4B	13	I	4B Input
GND	7	—	Ground Pin
NC	—	—	No Connection
V_{CC}	14	—	Power Pin

Copyright © 2024 Texas Instruments Incorporated

4 Specifications

4.1 Absolute Maximum Ratings

over operating free-air temperature range (unless otherwise noted)[1]

			MIN	MAX	UNIT
V_{CC}	Supply voltage		–0.5	6	V
I_{IK} [2]	Input clamp current	(V_I < 0 or V_I > V_{CC})		±20	mA
I_{OK} [2]	Output clamp current	(V_O < 0 or V_O > V_{CC})		±50	mA
I_O	Continuous output current	(V_O = 0 to V_{CC})		±50	mA
	Continuous current through V_{CC} or GND			±100	mA
T_{stg}	Storage temperature range		–65	150	°C

(1) Stresses beyond those listed under “absolute maximum ratings” may cause permanent damage to the device. These are stress ratings only, and functional operation of the device at these or any other conditions beyond those indicated under “recommended operating conditions” is not implied. Exposure to absolute-maximum-rated conditions for extended periods may affect device reliability.
(2) The input and output voltage ratings may be exceeded if the input and output current ratings are observed.

4.2 ESD Ratings

			VALUE	UNIT
$V_{(ESD)}$	Electrostatic discharge	Human body model (HBM), per ANSI/ESDA/JEDEC JS-001[1]	±2000	V

(1) JEDEC document JEP155 states that 500-V HBM allows safe manufacturing with a standard ESD control process. Manufacturing with less than 500-V HBM is possible with the necessary precautions.

4.3 Recommended Operating Conditions

over operating free-air temperature range (unless otherwise noted)[1]

		TA = 25°C		-40°C TO 85°C		-55°C TO 125°C		UNIT
		MIN	MAX	MIN	MAX	MIN	MAX	
V_{CC}	Supply voltage	4.5	5.5	4.5	5.5	4.5	5.5	V
V_{IH}	High-level input voltage	2		2		2		V
V_{IL}	Low-level input voltage		0.8		0.8		0.8	V
V_I	Input voltage	0	V_{CC}	0	V_{CC}	0	V_{CC}	V
V_O	Output voltage	0	V_{CC}	0	V_{CC}	0	V_{CC}	V
I_{OH}	High-level output current		-24		-24		-24	mA
I_{OL}	Low-level output current		24		24		24	mA
Δt/Δv	Input transition rise or fall rate		10		10		10	ns/V

(1) All unused inputs of the device must be held at V_{CC} or GND to ensure proper device operation. Refer to the TI application report, *Implications of Slow or Floating CMOS Inputs*, literature number SCBA004.

4.4 Thermal Information

THERMAL METRIC[1]		CD74ACT00		UNIT
		D (SOIC)	N (PDIP)	
		14 PINS	14 PINS	
$R_{\theta JA}$	Junction-to-ambient thermal resistance	119.9	80	°C/W

(1) For more information about traditional and new thermal metrics, see the *Semiconductor and IC Package Thermal Metrics* application report, SPRA953.

Copyright © 2024 Texas Instruments Incorporated

4.5 Electrical Characteristics

over recommended operating free-air temperature range (unless otherwise noted)

PARAMETER	TEST CONDITIONS		V_{CC}	T_A = 25 °C		-40°C TO 85°C		-55°C TO 125°C		UNIT
				MIN	MAX	MIN	MAX	MIN	MAX	
V_{OH}	$V_I = V_{IH}$ or V_{IL}	I_{OH} = -50 µA	4.5 V	4.4		4.4		4.4		V
		I_{OH} = -24 mA	4.5 V	3.94		3.8		3.7		
		I_{OH} = -50 mA(1)	5.5 V					3.85		
		I_{OH} = -75 mA(1)	5.5 V			3.85				
V_{OL}	$V_I = V_{IH}$ or V_{IL}	I_{OL} = 50 µA	4.5 V		0.1		0.1		0.1	V
		I_{OL} = 24 mA	4.5 V		0.36		0.44		0.5	
		I_{OL} = 50 mA(1)	5.5 V						1.65	
		I_{OL} = 75 mA(1)	5.5 V				1.65			
I_I	$V_I = V_{CC}$ or GND		5.5 V		±0.1		±1		±1	µA
I_{CC}	$V_I = V_{CC}$ or GND,	I_O = 0	5.5 V		4		40		80	µA
ΔI_{CC}	$V_I = V_{CC}$ - 2.1 V		4.5 V to 5.5 V		2.4		2.8		3	mA
C_i					10		10		10	PF

(1) Test one output at a time, not exceeding 1-second duration. Measurement is made by forcing indicated current and measuring voltage to minimize power dissipation. Test verifies a minimum 50-Ω transmission-line drive capability at 85°C and 75-Ω transmission-line drive capability at 125°C.

Table 4-1. Act Input Load Table

INPUT	UNIT LOAD
A or B	0.15

Unit load is ΔI_{CC} limit specified in electrical characteristics table (e.g., 2.4 mA at 25°C).

4.6 Switching Characteristics

over recommended operating free-air temperature range, V_{CC} = 5 V ± 0.5 V, C_L = 50 pF (unless otherwise noted) (see Figure 5-1)

PARAMETER	FROM (INPUT)	TO (OUTPUT)	–40°C TO 85°C		–55°C TO 125°C		UNIT
			MIN	MAX	MIN	MAX	
t_{PLH}	A or B	Y	3.4	9.5	3.2	10.8	ns
t_{PHL}			2.8	8	2.7	13.2	

4.7 Operating Characteristics

V_{CC} = 5 V, T_A = 25°C

PARAMETER	TYP	UNIT
C_{pd} Power dissipation capacitance	45	pF

5 Parameter Measurement Information

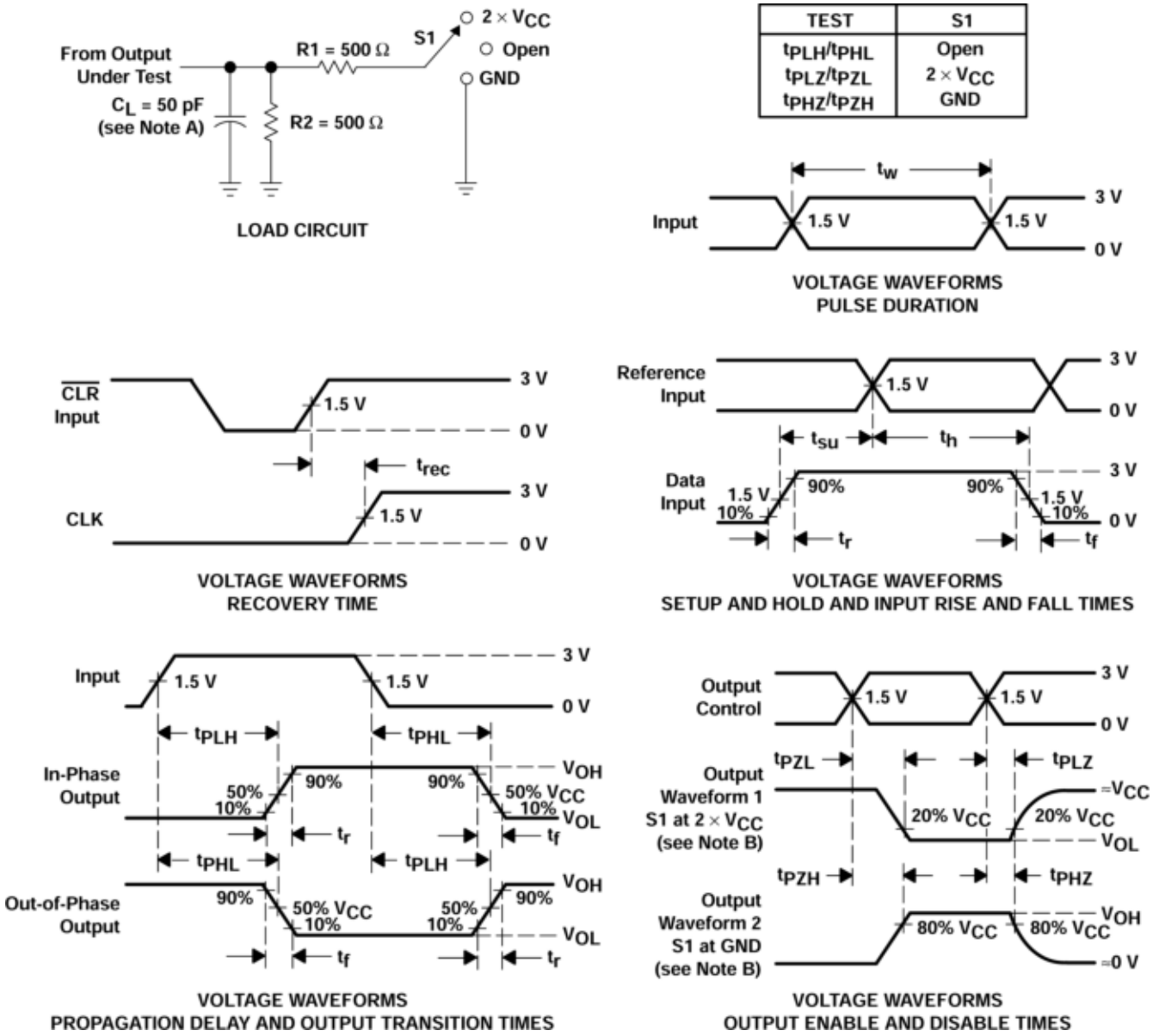

A. C_L includes probe and test-fixture capacitance.
B. Waveform 1 is for an output with internal conditions such that the output is low except when disabled by the output control. Waveform 2 is for an output with internal conditions such that the output is high except when disabled by the output control.
C. All input pulses are supplied by generators having the following characteristics: PRR ≤ 1 MHz, Z_O = 50 Ω, t_r = 3 ns, t_f = 3 ns. Phase relationships between waveforms are arbitrary.
D. For clock inputs, f_{max} is measured with the input duty cycle at 50%.
E. The outputs are measured one at a time with one input transition per measurement.
F. t_{PLH} and t_{PHL} are the same as t_{pd}.
G. t_{PZL} and t_{PZH} are the same as t_{en}.
H. t_{PLZ} and t_{PHZ} are the same as t_{dis}.

Figure 5-1. Load Circuit and Voltage Waveforms

Copyright © 2024 Texas Instruments Incorporated

6 Detailed Description

6.1 Functional Block Diagram

Figure 6-1. Logic Diagram, Each Gate (Positive Logic)

6.2 Device Functional Modes

Function Table (Each Gate) is the function table for the CDx4ACT00.

Table 6-1. Function Table (Each Gate)

INPUTS		OUTPUT Y
A	B	
H	H	L
L	X	H
X	L	H

7 Application and Implementation

Note

Information in the following applications sections is not part of the TI component specification, and TI does not warrant its accuracy or completeness. TI's customers are responsible for determining suitability of components for their purposes, as well as validating and testing their design implementation to confirm system functionality.

7.1 Power Supply Recommendations

The power supply can be any voltage between the minimum and maximum supply voltage rating located in the *Section 4.1* table.

Each V_{CC} pin should have a good bypass capacitor to prevent power disturbance. For devices with a single supply, 0.1 µF is recommended. If there are multiple V_{CC} pins, 0.01 µF or 0.022 µF is recommended for each power pin. It is acceptable to parallel multiple bypass caps to reject different frequencies of noise. A 0.1 µF and 1 µF are commonly used in parallel. The bypass capacitor should be installed as close to the power pin as possible for best results.

7.2 Layout

7.2.1 Layout Guidelines

When using multiple bit logic devices inputs should not ever float.

In many cases, functions or parts of functions of digital logic devices are unused, for example, when only two inputs of a triple-input AND gate are used or only 3 of the 4 buffer gates are used. Such input pins should not be left unconnected because the undefined voltages at the outside connections result in undefined operational states. Specified in Layout Example for the CD74ACT00 are the rules that must be observed under all circumstances. All unused inputs of digital logic devices must be connected to a high or low bias to prevent them from floating. The logic level that must be applied to any particular unused input depends on the function of the device. Generally they will be tied to GND or V_{CC}; whichever makes more sense or is more convenient. It is generally acceptable to float outputs unless the part is a transceiver. If the transceiver has an output enable pin, it will disable the outputs section of the part when asserted. This will not disable the input section of the IOs, so they cannot float when disabled.

7.2.2 Layout Example

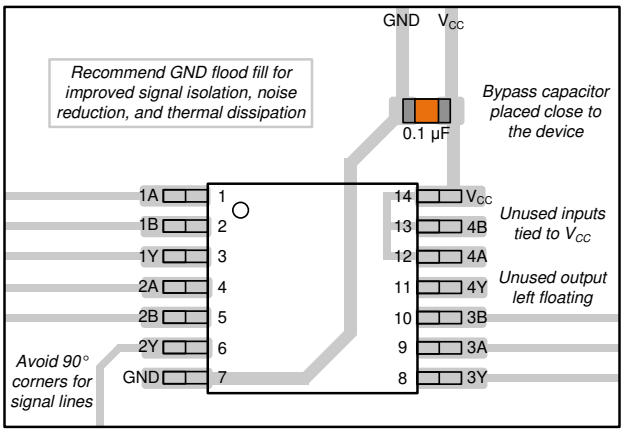

Figure 7-1. Layout Example for the CDx4ACT00

Copyright © 2024 Texas Instruments Incorporated

8 Device and Documentation Support

8.1 Documentation Support (Analog)

8.1.1 Related Documentation

The table below lists quick access links. Categories include technical documents, support and community resources, tools and software, and quick access to sample or buy.

Table 8-1. Related Links

PARTS	PRODUCT FOLDER	SAMPLE & BUY	TECHNICAL DOCUMENTS	TOOLS & SOFTWARE	SUPPORT & COMMUNITY
CD54ACT00	Click here	Click here	Click here	Click here	Click here
CD74ACT00	Click here	Click here	Click here	Click here	Click here

8.2 Receiving Notification of Documentation Updates

To receive notification of documentation updates, navigate to the device product folder on ti.com. Click on *Notifications* to register and receive a weekly digest of any product information that has changed. For change details, review the revision history included in any revised document.

8.3 Support Resources

TI E2E™ support forums are an engineer's go-to source for fast, verified answers and design help — straight from the experts. Search existing answers or ask your own question to get the quick design help you need.

Linked content is provided "AS IS" by the respective contributors. They do not constitute TI specifications and do not necessarily reflect TI's views; see TI's Terms of Use.

8.4 Trademarks

TI E2E™ is a trademark of Texas Instruments.
All trademarks are the property of their respective owners.

8.5 Electrostatic Discharge Caution

This integrated circuit can be damaged by ESD. Texas Instruments recommends that all integrated circuits be handled with appropriate precautions. Failure to observe proper handling and installation procedures can cause damage.

ESD damage can range from subtle performance degradation to complete device failure. Precision integrated circuits may be more susceptible to damage because very small parametric changes could cause the device not to meet its published specifications.

8.6 Glossary

TI Glossary This glossary lists and explains terms, acronyms, and definitions.

9 Revision History

NOTE: Page numbers for previous revisions may differ from page numbers in the current version.

Changes from Revision B (June 2002) to Revision C (August 2024) **Page**

- Added *Device Information* table, *Pin Functions* table, *ESD Ratings* table, *Thermal Information* table, *Device Functional Modes,*Application and Implementation section, *Device and Documentation Support* section, and *Mechanical, Packaging, and Orderable Information* section 1
- Updated RθJA values: D = 86 to 119.9, all values in °C/W..... 4

10 Mechanical, Packaging, and Orderable Information

The following pages include mechanical, packaging, and orderable information. This information is the most current data available for the designated devices. This data is subject to change without notice and revision of this document. For browser-based versions of this data sheet, refer to the left-hand navigation.

PACKAGING INFORMATION

Orderable part number	Status (1)	Material type (2)	Package | Pins	Package qty | Carrier	RoHS (3)	Lead finish/ Ball material (4)	MSL rating/ Peak reflow (5)	Op temp (°C)	Part marking (6)
CD54ACT00F3A	Active	Production	CDIP (J) | 14	25 | TUBE	No	SNPB	N/A for Pkg Type	-55 to 125	CD54ACT00F3A
CD54ACT00F3A.A	Active	Production	CDIP (J) | 14	25 | TUBE	No	SNPB	N/A for Pkg Type	-55 to 125	CD54ACT00F3A
CD74ACT00E	NRND	Production	PDIP (N) | 14	25 | TUBE	Yes	NIPDAU	N/A for Pkg Type	-55 to 125	CD74ACT00E
CD74ACT00E.A	NRND	Production	PDIP (N) | 14	25 | TUBE	Yes	NIPDAU	N/A for Pkg Type	-55 to 125	CD74ACT00E
CD74ACT00M	Obsolete	Production	SOIC (D) | 14	-	-	Call TI	Call TI	-55 to 125	ACT00M
CD74ACT00M96	Active	Production	SOIC (D) | 14	2500 | LARGE T&R	Yes	NIPDAU	Level-1-260C-UNLIM	-55 to 125	ACT00M
CD74ACT00M96.A	Active	Production	SOIC (D) | 14	2500 | LARGE T&R	Yes	NIPDAU	Level-1-260C-UNLIM	-55 to 125	ACT00M
CD74ACT00M96G4	Active	Production	SOIC (D) | 14	2500 | LARGE T&R	Yes	NIPDAU	Level-1-260C-UNLIM	-55 to 125	ACT00M
CD74ACT00M96G4.A	Active	Production	SOIC (D) | 14	2500 | LARGE T&R	Yes	NIPDAU	Level-1-260C-UNLIM	-55 to 125	ACT00M

(1) **Status:** For more details on status, see our product life cycle.

(2) **Material type:** When designated, preproduction parts are prototypes/experimental devices, and are not yet approved or released for full production. Testing and final process, including without limitation quality assurance, reliability performance testing, and/or process qualification, may not yet be complete, and this item is subject to further changes or possible discontinuation. If available for ordering, purchases will be subject to an additional waiver at checkout, and are intended for early internal evaluation purposes only. These items are sold without warranties of any kind.

(3) **RoHS values:** Yes, No, RoHS Exempt. See the TI RoHS Statement for additional information and value definition.

(4) **Lead finish/Ball material:** Parts may have multiple material finish options. Finish options are separated by a vertical ruled line. Lead finish/Ball material values may wrap to two lines if the finish value exceeds the maximum column width.

(5) **MSL rating/Peak reflow:** The moisture sensitivity level ratings and peak solder (reflow) temperatures. In the event that a part has multiple moisture sensitivity ratings, only the lowest level per JEDEC standards is shown. Refer to the shipping label for the actual reflow temperature that will be used to mount the part to the printed circuit board.

(6) **Part marking:** There may be an additional marking, which relates to the logo, the lot trace code information, or the environmental category of the part.

Multiple part markings will be inside parentheses. Only one part marking contained in parentheses and separated by a "~" will appear on a part. If a line is indented then it is a continuation of the previous line and the two combined represent the entire part marking for that device.

Important Information and Disclaimer: The information provided on this page represents TI's knowledge and belief as of the date that it is provided. TI bases its knowledge and belief on information provided by third parties, and makes no representation or warranty as to the accuracy of such information. Efforts are underway to better integrate information from third parties. TI has taken and continues to take reasonable steps to provide representative

and accurate information but may not have conducted destructive testing or chemical analysis on incoming materials and chemicals. TI and TI suppliers consider certain information to be proprietary, and thus CAS numbers and other limited information may not be available for release.

In no event shall TI's liability arising out of such information exceed the total purchase price of the TI part(s) at issue in this document sold by TI to Customer on an annual basis.

OTHER QUALIFIED VERSIONS OF CD54ACT00, CD74ACT00 :

- Catalog : CD74ACT00
- Military : CD54ACT00

NOTE: Qualified Version Definitions:

- Catalog - TI's standard catalog product
- Military - QML certified for Military and Defense Applications

TUBE

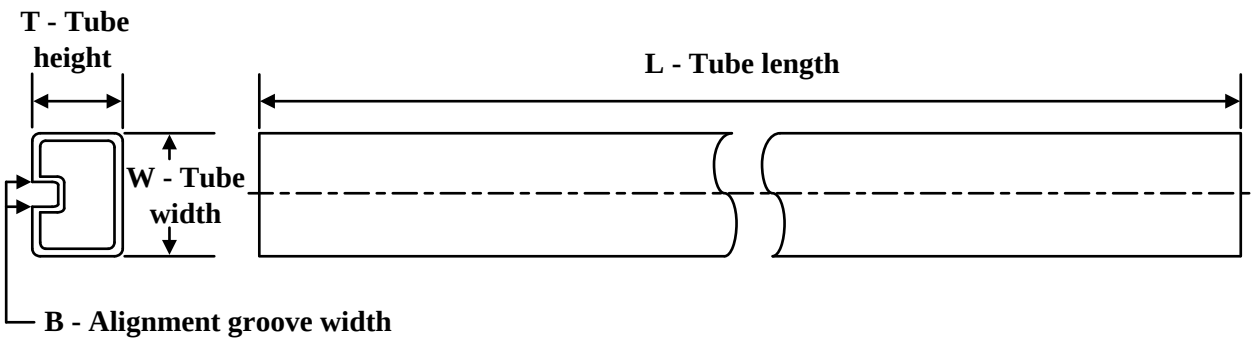

*All dimensions are nominal

Device	Package Name	Package Type	Pins	SPQ	L (mm)	W (mm)	T (µm)	B (mm)
CD74ACT00E	N	PDIP	14	25	506	13.97	11230	4.32
CD74ACT00E	N	PDIP	14	25	506	13.97	11230	4.32
CD74ACT00E.A	N	PDIP	14	25	506	13.97	11230	4.32
CD74ACT00E.A	N	PDIP	14	25	506	13.97	11230	4.32

J 14

CDIP - 5.08 mm max height

CERAMIC DUAL IN LINE PACKAGE

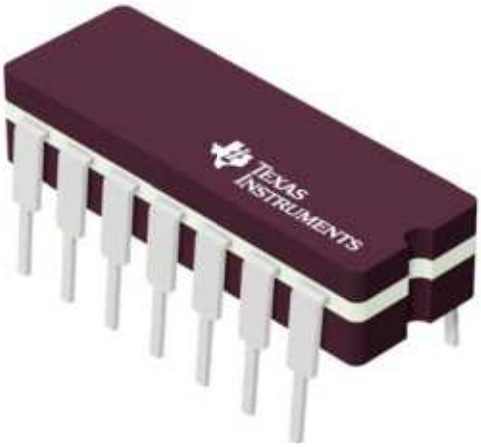

Images above are just a representation of the package family, actual package may vary.
Refer to the product data sheet for package details.

4040083-5/G

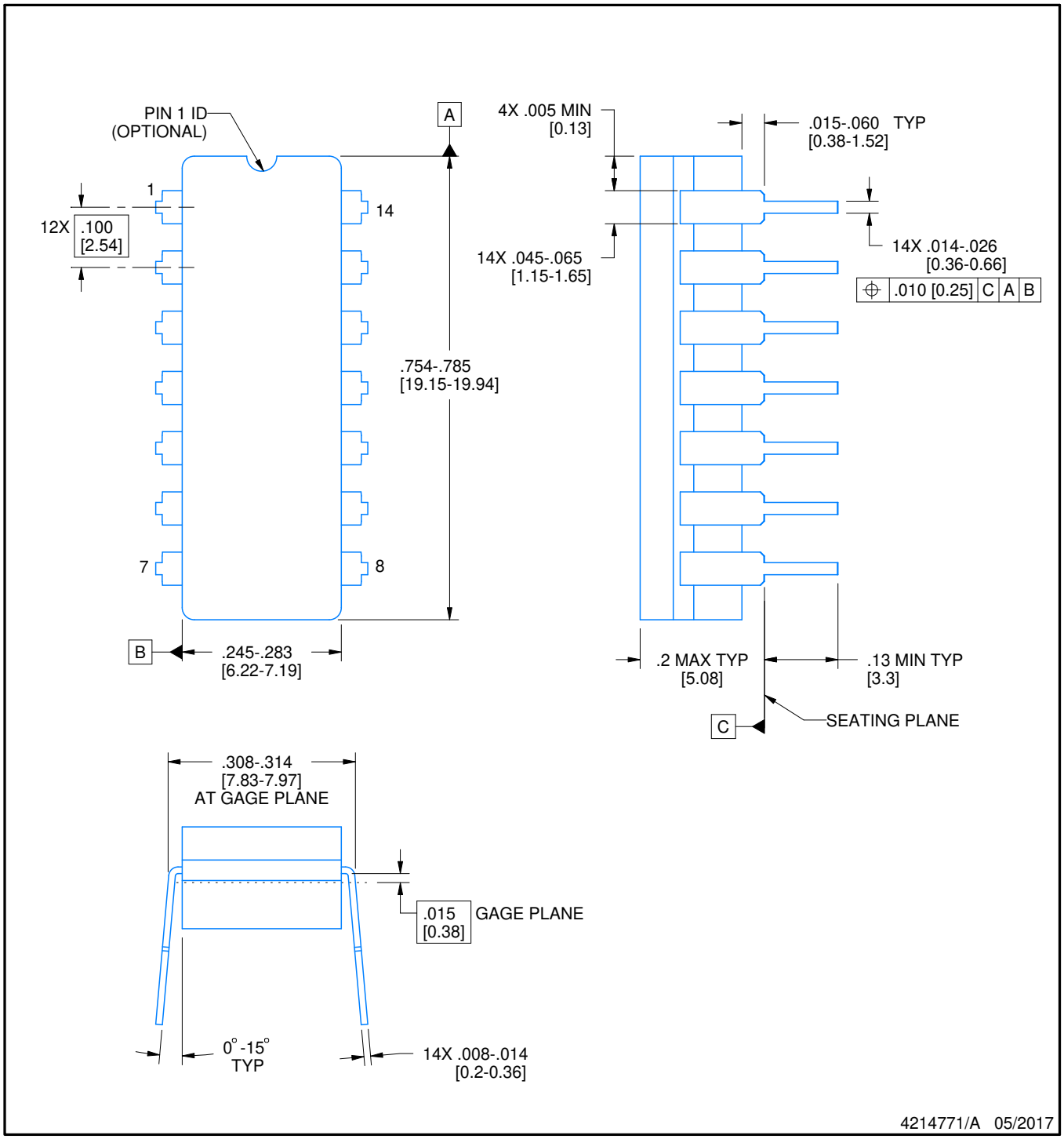

NOTES:

1. All controlling linear dimensions are in inches. Dimensions in brackets are in millimeters. Any dimension in brackets or parenthesis are for reference only. Dimensioning and tolerancing per ASME Y14.5M.
2. This drawing is subject to change without notice.
3. This package is hermitically sealed with a ceramic lid using glass frit.
4. Index point is provided on cap for terminal identification only and on press ceramic glass frit seal only.
5. Falls within MIL-STD-1835 and GDIP1-T14.

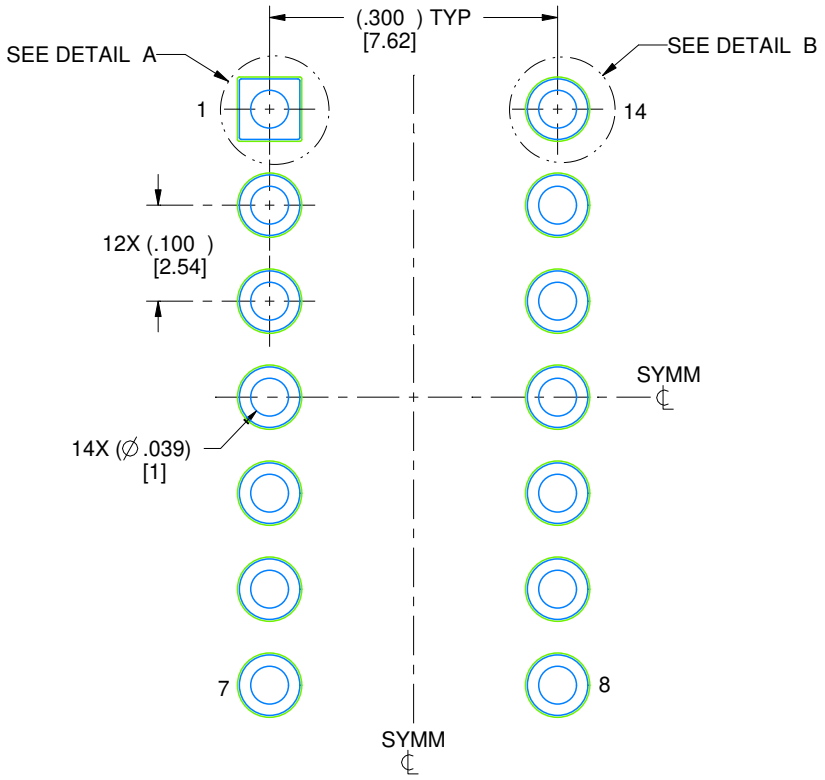

LAND PATTERN EXAMPLE
NON-SOLDER MASK DEFINED
SCALE: 5X

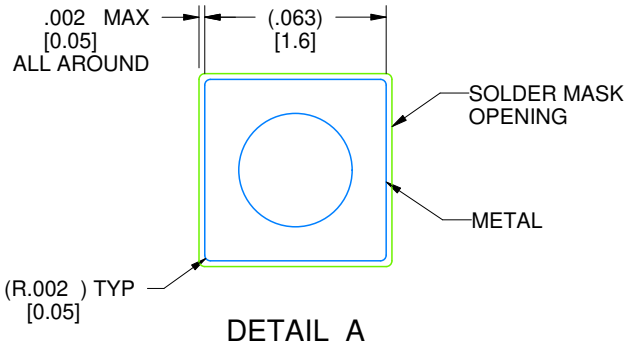

DETAIL A
SCALE: 15X

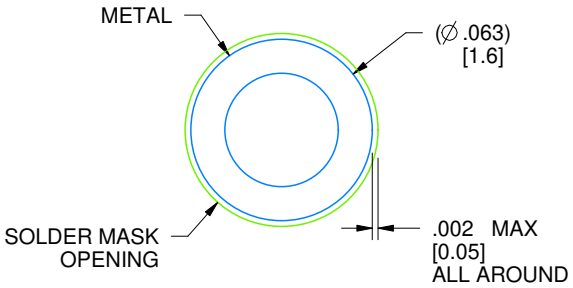

DETAIL B
13X, SCALE: 15X

4214771/A 05/2017

N (R–PDIP–T**) PLASTIC DUAL–IN–LINE PACKAGE

16 PINS SHOWN

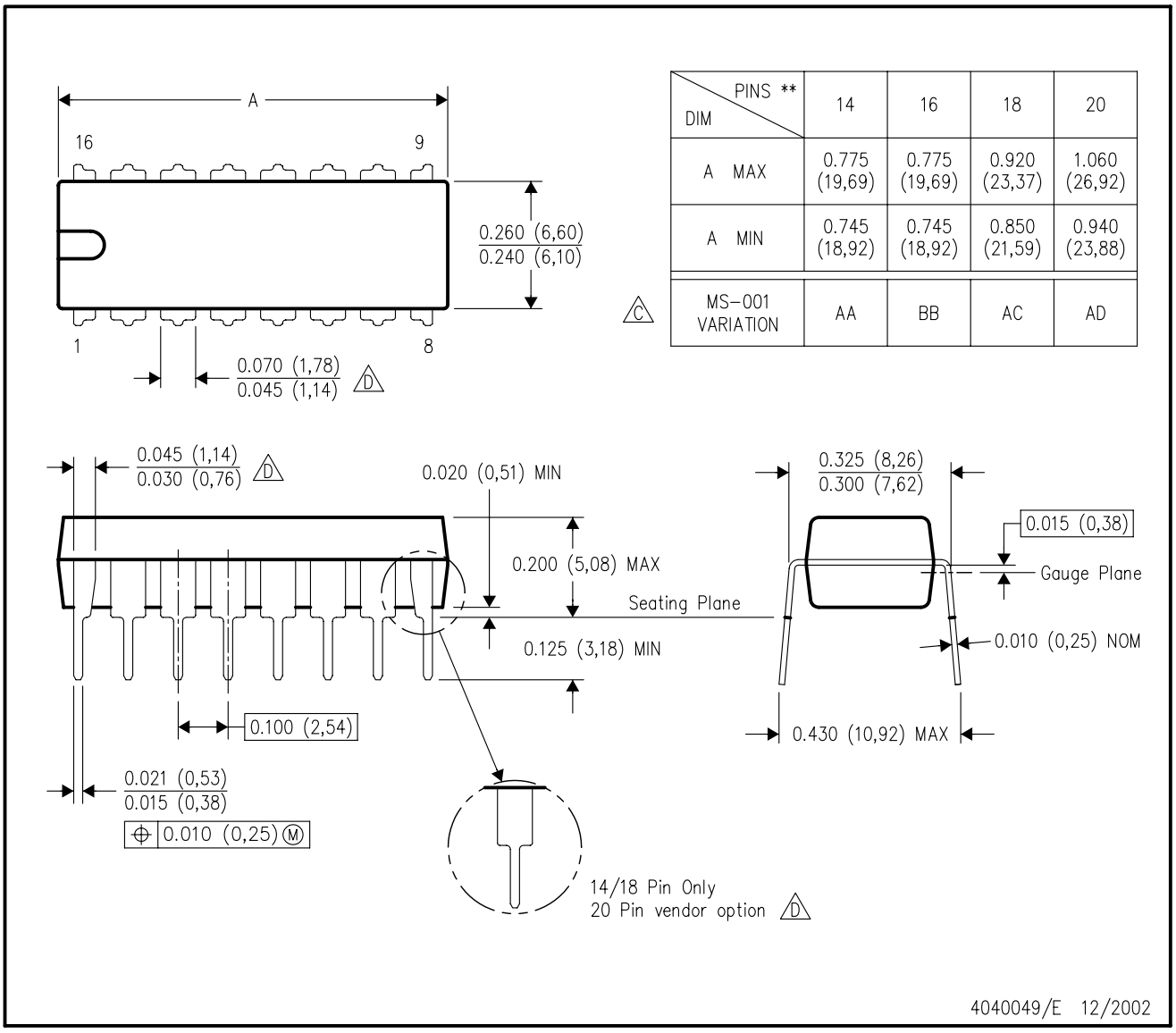

DIM \ PINS **	14	16	18	20
A MAX	0.775 (19,69)	0.775 (19,69)	0.920 (23,37)	1.060 (26,92)
A MIN	0.745 (18,92)	0.745 (18,92)	0.850 (21,59)	0.940 (23,88)
MS–001 VARIATION (C)	AA	BB	AC	AD

NOTES:
A. All linear dimensions are in inches (millimeters).
B. This drawing is subject to change without notice.
C. Falls within JEDEC MS–001, except 18 and 20 pin minimum body length (Dim A).
D. The 20 pin end lead shoulder width is a vendor option, either half or full width.

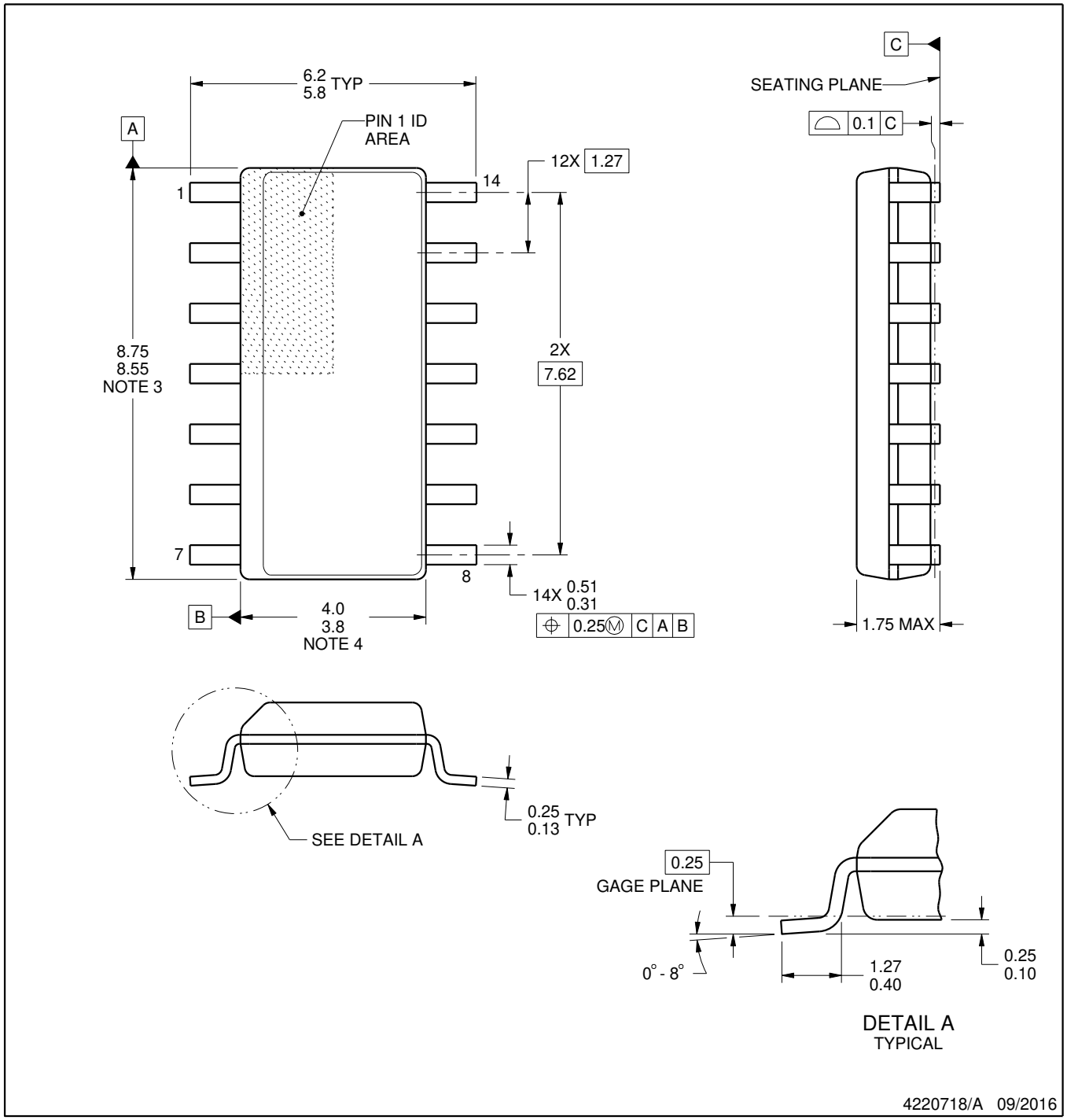

NOTES:

1. All linear dimensions are in millimeters. Dimensions in parenthesis are for reference only. Dimensioning and tolerancing per ASME Y14.5M.
2. This drawing is subject to change without notice.
3. This dimension does not include mold flash, protrusions, or gate burrs. Mold flash, protrusions, or gate burrs shall not exceed 0.15 mm, per side.
4. This dimension does not include interlead flash. Interlead flash shall not exceed 0.43 mm, per side.
5. Reference JEDEC registration MS-012, variation AB.

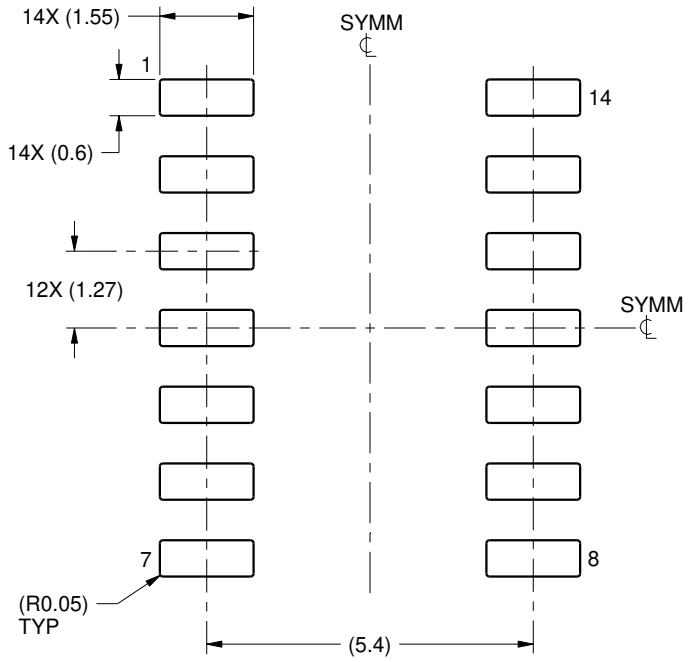

LAND PATTERN EXAMPLE
SCALE:8X

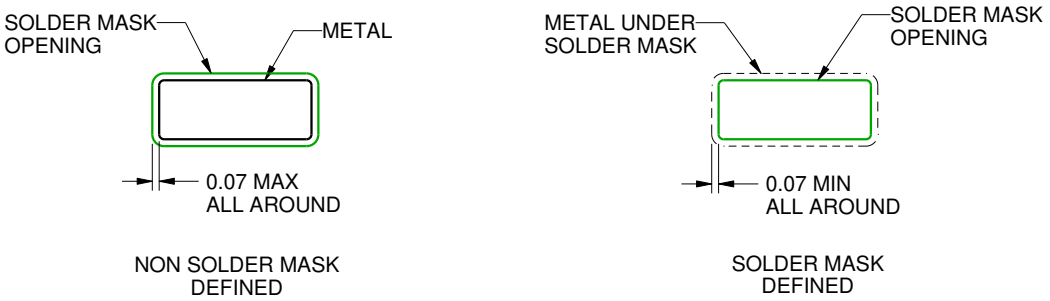

SOLDER MASK DETAILS

4220718/A 09/2016

NOTES: (continued)

6. Publication IPC-7351 may have alternate designs.
7. Solder mask tolerances between and around signal pads can vary based on board fabrication site.

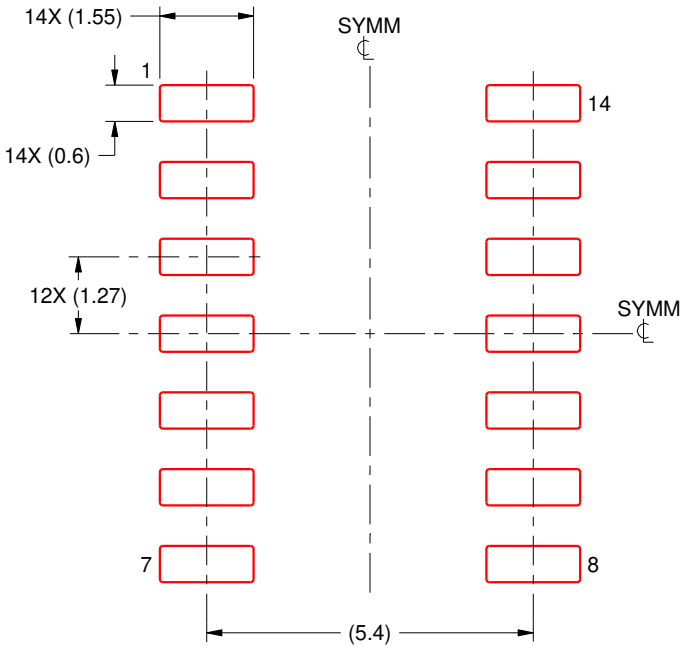

SOLDER PASTE EXAMPLE
BASED ON 0.125 mm THICK STENCIL
SCALE:8X

4220718/A 09/2016

NOTES: (continued)

8. Laser cutting apertures with trapezoidal walls and rounded corners may offer better paste release. IPC-7525 may have alternate design recommendations.
9. Board assembly site may have different recommendations for stencil design.

IMPORTANT NOTICE AND DISCLAIMER

TI PROVIDES TECHNICAL AND RELIABILITY DATA (INCLUDING DATASHEETS), DESIGN RESOURCES (INCLUDING REFERENCE DESIGNS), APPLICATION OR OTHER DESIGN ADVICE, WEB TOOLS, SAFETY INFORMATION, AND OTHER RESOURCES “AS IS” AND WITH ALL FAULTS, AND DISCLAIMS ALL WARRANTIES, EXPRESS AND IMPLIED, INCLUDING WITHOUT LIMITATION ANY IMPLIED WARRANTIES OF MERCHANTABILITY, FITNESS FOR A PARTICULAR PURPOSE OR NON-INFRINGEMENT OF THIRD PARTY INTELLECTUAL PROPERTY RIGHTS.

These resources are intended for skilled developers designing with TI products. You are solely responsible for (1) selecting the appropriate TI products for your application, (2) designing, validating and testing your application, and (3) ensuring your application meets applicable standards, and any other safety, security, regulatory or other requirements.

These resources are subject to change without notice. TI grants you permission to use these resources only for development of an application that uses the TI products described in the resource. Other reproduction and display of these resources is prohibited. No license is granted to any other TI intellectual property right or to any third party intellectual property right. TI disclaims responsibility for, and you fully indemnify TI and its representatives against any claims, damages, costs, losses, and liabilities arising out of your use of these resources.

TI’s products are provided subject to TI’s Terms of Sale, TI’s General Quality Guidelines, or other applicable terms available either on ti.com or provided in conjunction with such TI products. TI’s provision of these resources does not expand or otherwise alter TI’s applicable warranties or warranty disclaimers for TI products. Unless TI explicitly designates a product as custom or customer-specified, TI products are standard, catalog, general purpose devices.

TI objects to and rejects any additional or different terms you may propose.

Copyright © 2026, Texas Instruments Incorporated

Last updated 10/2025