CDx4AC24x, CDx4ACT24x Octal Buffer/Line Drivers, 3-State

1 Features

- SCR-Latch-up-resistant CMOS process and circuit design
- Speed of bipolar FAST /AS/S with significantly reduced power consumption
- Balanced propagation delays
- AC types feature 1.5V to 5.5V operation and balanced noise immunity at 30% of the supply
- ±24mA output drive current
  - Fanout to 15 FAST* ICs
  - Drives 50ohm transmission lines

2 Description

The RCA CD54/74AC240, CD54/74AC241, and CD54/74AC244 and the CD54/74ACT240, CD54/74ACT241, and CD54/74ACT244 3-state octal buffer/line drivers use the RCA ADVANCED CMOS technology.

Device Information

PART NUMBER	PACKAGE(1)	PACKAGE SIZE(2)	BODY SIZE(3)
CDx4AC/ACT24x	DW (SOIC, 20)	12.8mm x 10.3mm	12.8mm x 7.5mm
	N (PDIP, 20)	24.33mm x 9.4mm	24.33mm x 6.35mm

(1) For more information, see Section 10.
(2) The package size (length × width) is a nominal value and includes pins, where applicable.
(3) The body size (length × width) is a nominal value and does not include pins.

Simplified Schematic

**FAST is a Registered Trademark of Fairchild Semiconductor Corp.*

An IMPORTANT NOTICE at the end of this data sheet addresses availability, warranty, changes, use in safety-critical applications, intellectual property matters and other important disclaimers. PRODUCTION DATA.

Table of Contents

1 Features....1
2 Description....1
3 Pin Configuration and Functions....3
4 Specifications....5
4.1 Absolute Maximum Ratings....5
4.2 Recommended Operating Conditions....5
4.3 Thermal Information....5
4.4 Static Electrical Characteristics: AC Series....6
4.5 Electrical Characteristics: ACT Series....7
4.6 Switching Characteristics: AC Series....8
4.7 Switching Characteristics: ACT Series....8
5 Parameter Measurement Information....10
6 Detailed Description....12
6.1 Overview....12
6.2 Functional Block Diagram....12
6.3 Device Functional Modes....12
7 Application and Implementation....14
7.1 Power Supply Recommendations....14
7.2 Layout....14
8 Device and Documentation Support....15
8.1 Documentation Support (Analog)....15
8.2 Receiving Notification of Documentation Updates....15
8.3 Support Resources....15
8.4 Trademarks....15
8.5 Electrostatic Discharge Caution....15
8.6 Glossary....15
9 Revision History....15
10 Mechanical, Packaging, and Orderable Information....16

Copyright © 2024 Texas Instruments Incorporated

3 Pin Configuration and Functions

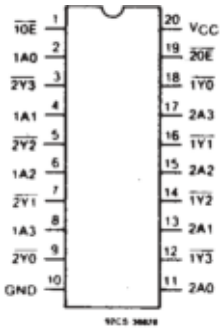

Figure 3-1. CD54/74AC, ACT240 Types Terminal Assignment

Figure 3-2. CD54/74AC, ACT241 Types Terminal Assignment

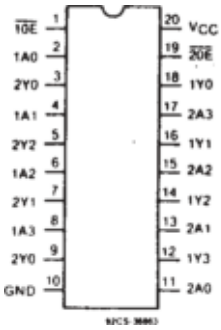

Figure 3-3. CD54/74AC, ACT244 Types Terminal Assignment

Table 3-1. Pin Functions

PIN		TYPE[1]	DESCRIPTION
NO.	NAME		
1$\overline{OE}$	1	I	Bank 1, output enable, active low
1A0	2	I	Bank 1, channel 1 input
2Y3	3	O	Bank 2, channel 4 output
1A1	4	I	Bank 1, channel 2 input
2Y2	5	O	Bank 2, channel 3 output
1A2	6	I	Bank 1, channel 3 input
2Y1	7	O	Bank 2, channel 2 output
1A3	8	I	Bank 1, channel 4 input
2Y0	9	O	Bank 2, channel 1 output
GND	10	G	Ground
2A0	11	I	Bank 2, channel 1 input
1Y3	12	O	Bank 1, channel 4 output
2A1	13	I	Bank 2, channel 2 input
1Y2	14	O	Bank 1, channel 3 output
2A2	15	I	Bank 2, channel 3 input
1Y1	16	O	Bank 1, channel 2 output
2A3	17	I	Bank 2, channel 4 input
1Y0	18	O	Bank 1, channel 1 output
2$\overline{OE}$	19	I	Bank 2, output enable, active low
V_{CC}	20	P	Positive supply
Thermal pad[2]		—	The thermal pad can be connected to GND or left floating. Do not connect to any other signal or supply

(1) I = input, O = output, I/O = input or output, G = ground, P = power.
(2) RKS package only.

Copyright © 2024 Texas Instruments Incorporated

4 Specifications

4.1 Absolute Maximum Ratings

over operating free-air temperature range (unless otherwise noted)[1]

			MIN	MAX	UNIT
V_{cc}	Supply voltage		−0.5	6	V
I_{IK}	Input diode current	(V_I < −0.5 V or V_I > V_{CC} + 0.5 V)		±20	mA
I_{OK}	Output diode current	(V_o < −0.5 V or V_O > V_{CC} + 0.5 V)		±50	mA
I_O	Output source or sink current per output pin	(V_O > −0.5 V or V_O < V_{CC} + 0.5 V)		±50	mA
	V_{CC} or ground current, (I_{CC} or I_{GND})			±100	mA[2]
T_{stg}	Storage temperature		-65	+150	°C

(1) Operation outside the Absolute Maximum Ratings may cause permanent device damage. Absolute Maximum Ratings do not imply functional operation of the device at these or any other conditions beyond those listed under Recommended Operating Conditions. If used outside the Recommended Operating Conditions but within the Absolute Maximum Ratings, the device may not be fully functional, and this may affect device reliability, functionality, performance, and shorten the device lifetime.
(2) For up to 4 outputs per device: add ± 25 mA for each additional output.

4.2 Recommended Operating Conditions

For maximum reliability, normal operating conditions should be selected so that operation is always within the following ranges:

CHARACTERISTIC			MIN	MAX	UNIT
V_{CC} [1]	Supply voltage				
	AC Types		1.5	5.5	V
	ACT Types		4.5	5.5	V
V_I, V_O	Input or Output Voltage		0	V_{CC}	V
T_A	Operating Temperature	CD54	-55	+125	°C
		CD74	-40	+85	
dt/dv	Input Rise and Fall Slew Rate				
	at 1.5 V to 3 V (AC Types)		0	50	ns/V
	at 3.6 v to 5.5 V (AC Types)		0	20	ns/V
	at 4.5 V to 5.5 V (ACT Types)		0	10	ns/V

(1) Unless otherwise specified, all voltages are referenced to ground.

4.3 Thermal Information

THERMAL METRIC[1]		CDx4AC/ACT24x		UNIT
		DW (SOIC)	N (PDIP)	
		20 PINS		
$R_{\theta JA}$	Junction-to-ambient thermal resistance	101.2	40	°C/W

(1) For more information about traditional and new thermal metrics, see the *Semiconductor and IC Package Thermal Metrics* application report, SPRA953.

4.4 Static Electrical Characteristics: AC Series

CHARACTERISTICS		TEST CONDITIONS		V_{CC} (V)	AMBIENT TEMPERATURE (T_A) - °C						UNIT
					+25		-40 to +85		-55 to +125		
		V_I (V)	I_O (mA)		MIN	MAX	MIN	MAX	MIN	MAX	
V_{IH}	High-Level Input Voltage			1.5	1.2	—	1.2	—	1.2	—	V
				3	2.1	—	2.1	—	2.1	—	
				5.5	3.85	—	3.85	—	3.85	—	
V_{IL}	Low-Level Input Voltage			1.5	—	0.3	—	0.3	—	0.3	V
				3	—	0.9	—	0.9	—	0.9	
				5.5	—	1.65	—	1.65	—	1.65	
V_{OH}	High-Level Output Voltage	V_{IH} or V_{IL}	-0.05	1.5	1.4	—	1.4	—	1.4	—	V
			-0.05	3	2.9	—	2.9	—	2.9	—	
			-0.05	4.5	4.4	—	4.4	—	4.4	—	
			-4	3	2.58	—	2.48	—	2.4	—	
			-24	4.5	3.94	—	3.8	—	3.7	—	
		(1) , (2)	-75	5.5	—	—	3.85	—	—	—	
			-50	5.5	—	—	—	—	3.85	—	
V_{ol}	Low-Level Output Voltage	V_{IH} or V_{il}	0.05	1.5	—	0.1	—	0.1	—	0.1	V
			0.05	3	—	0.1	—	0.1	—	0.1	
			0.05	4.5	—	0.1	—	0.1	—	0.1	
			12	3	—	0.36	—	0.44	—	0.5	
			24	4.5	—	0.36	—	0.44	—	0.5	
		(1) , (2)	75	5.5	—	—	—	1.65	—	—	
			50	5.5	—	—	—	—	—	1.65	
I_I	Input Leakage Current	V_{CC} or GND		5.5	—	±0.1	—	±1	—	±1	μA
I_{oz}	3-State Leakage Current	v_{IH} or V_{il} V_O = V_{CC} or GND		5.5	—	±0.5	—	±5	—	±10	μA
I_{CC}	Quiescent Supply Current, MSI	V_{CC} or GND	0	5.5	—	8	—	80	—	160	μA

(1) Test one output at a time for a 1-second maximum duration. Measurement is made by forcing current and measuring voltage to minimize power dissipation.
(2) Test verifies a minimum 50-ohm transmission-line-drive capability at +85°C, 75 ohms at +125°C.

Copyright © 2024 Texas Instruments Incorporated

4.5 Electrical Characteristics: ACT Series

CHARACTERISTICS		TEST CONDITIONS		V_{CC} (V)	AMBIENT TEMPERATURE (T_A) - °C						UNIT
					+25		-40 to +85		-55 to +125		
		V_I (V)	I_O (mA)		MIN	MAX	MIN	MAX	MIN	MAX	
V_{IH}	High-Level Input Voltage			4.5 to 5.5	2	—	2	—	2	—	V
V_{IL}	Low-Level Input Voltage			4.5 to 5.5	—	0.8	—	0.8	—	0.8	V
V_{OH}	High-Level Output Voltage	V_{IH} or V_{IL}	-0.05	4.5	4.4	—	4.4	—	4.4	—	V
			-24	4.5	3.94	—	3.8	—	3.7	—	
		(1), (2)	-75	5.5	—	—	3.85	—	—	—	
			-50	5.5	—	—	—	—	3.85	—	
V_{OL}	Low-Level Output Voltage	V_{IH} or V_{IL}	0.05	4.5	—	0.1	—	0.1	—	0.1	V
			24	4.5	—	0.36	—	0.44	—	0.5	
		(1), (2)	75	5.5	—	—	—	1.65	—	—	
			50	5.5	—	—	—	—	—	1.65	
I_I	Input Leakage Current	V_{CC} or GND		5.5	—	±0.1	—	±1	—	±1	μA
I_{OZ}	3-State Leakage Current	V_{IH} or V_{IL} V_O = V_{CC} or GND		5.5	—	±0.5	—	±5	—	±10	μA
I_{CC}	Quiescent Supply Current, MSI	V_{CC} or GND	0	5.5	—	8	—	80	—	160	μA
	Additional Quiescent Supply Current per Input Pin	V_{cc}-2.1		4.5 to 5.5	—	2.4	—	2.8	—	3	mA
ΔI_{CC}	TTL Inputs High										
	1 Unit Load										

(1) Test one output at a time for a 1-second maximum duration. Measurement is made by forcing current and measuring voltage to minimize power dissipation.
(2) Test verifies a minimum 50-ohm transmission-line-drive capability at +85°C. 75 ohms at +125°C.

Table 4-1. Act Input Loading Tables

CD54/74ACT240	
INPUT	UNIT LOADS[(1)]
nA0 - A3	1.42
$\overline{10E}$	0.83
$\overline{20E}$	0.83

CD54/74ACT241	
INPUT	UNIT LOADS[(1)]
nA0 - A3	0.5
$\overline{10E}$	0.83
20E	1.67

CD54/74ACT244	
INPUT	UNIT LOADS[(1)]
nA0 - A3	0.5
$\overline{10E}$	0.83
$\overline{20E}$	0.83

Copyright © 2024 Texas Instruments Incorporated

4.6 Switching Characteristics: AC Series

t_r, t_f 3 ns, C_L = 50 pF

PARAMETER	CHARACTERISTICS	V_{CC} (V)	AMBIENT TEMPERATURE (T_A) - °C				UNIT
			-40 to +85		-55 to +125		
			MIN	MAX	MIN	MAX	
Propagation Delays: Data to Outputs							
t_{PLH}		1.5	—	82	—	90	
	AC 240	3.3[1]	2.6	9.2	2.5	10.1	ns
t_{PHL}		5	1.9	6.5	1.8	7.2	
t_{PLH}		1.5	—	93	—	103	
	AC 241, 244	3.3	3	10.5	2.9	11.5	ns
t_{PHL}		5	2.2	7.5	2.1	8.2	
t_{PZL}		1.5	—	136	—	—	
	Output Enable Times	3.3	4.6	16.4	4.5	18	ns
t_{PZH}		5	3.1	10.9	3	12	
t_{PLZ}		1.5	—	136	—	150	
	Output Disable Times	3.3	3.9	13.6	3.8	15	ns
t_{PHZ}		5	3.1	10.9	3	12	
Power Dissipation Capacitance							
C_{PD}§	AC240	—	65 Typ.		65 Typ.		pF
	AC241, 244	—	71 Typ.		71 Typ.		
Min. (Valley) V_{oh}							
V_{OHV}	During Switching of Other Outputs (Output Under Test Not Switching)	5	4 Typ @25°C				V
Max. (Peak) V_{OL}							
V_{OLP}	During Switching of Other Outputs (Output Under Test Not Switching)	5	1 Typ. @ 25°C				V
C_I	Input Capacitance	—	—	10	—	10	pF
C_O	3-State Output Capacitance	—	—	15	—	15	pF

4.7 Switching Characteristics: ACT Series

t_r, t_f = 3 ns, C_L = 50 pF

PARAMETER	CHARACTERISTICS	V_{CC} (V)	AMBIENT TEMPERATURE (T_A) - °C				UNIT
			-40 to +85		-55 to +125		
			MIN	MAX	MIN	MAX	
Propagation Delays: Data to Outputs							
t_{PLH} t_{PHL}	ACT240	5[2]	2.3	7.8	2.2	8.6	ns
t_{PLH} t_{PHL}	ACT241, 244	5	2.5	8.7	2.4	9.6	ns
t_{PZL} t_{PZH}	Output Enable Times	5	3.5	12.2	3.4	13.4	ns
t_{PLZ} t_{PHZ}	Output Disable Times	5	3.5	12.2	3.4	13.4	ns
Power Dissipation Capacitance							
C_{PD}§[3]	ACT240	—	65 Typ		65 Typ		pF
	ACT241, 244	—	71 Typ		71 Typ		pF

Copyright © 2024 Texas Instruments Incorporated

t_r, t_l = 3 ns, C_L = 50 pF

PARAMETER	CHARACTERISTICS	V_{CC} (V)	AMBIENT TEMPERATURE (T_A) - °C				UNIT
			-40 to +85		-55 to +125		
			MIN	MAX	MIN	MAX	
Min. (Valley) V_{oh}							
V_{OHV} (1)	During Switching of Other Outputs (Output Under Test Not Switching)	5	4 Typ @25°C				V
Max. (Peak) V_{OL}							
V_{OLP} (1)	During Switching of Other Outputs (Output Under Test Not Switching)	5	1 Typ. @ 25°C				V
C_I	Input Capacitance	—	—	10	—	10	pF
C_O	3-State Output Capacitance	—	—	15	—	15	pF

(1) 3.3 V: min. is @ 3.6 V; max. is @ 3 V
(2) 5 V: min. is @ 5.5 V; max. is @ 4.5 V
(3) C_{PD} is used to determine the dynamic power consumption, per package.
  a. For AC series: $P_D = V_{CC}{}^2 f_i (C_{PD} + C_L)$
  b. For ACT series: $P_D = V_{CC}{}^2 f_i (C_{PD} + C_L) + V_{CC} \Delta I_{CC}$ where f_i = input frequency
    i. C_L = output load capacitance
    ii. V_{CC} = supply voltage.

5 Parameter Measurement Information

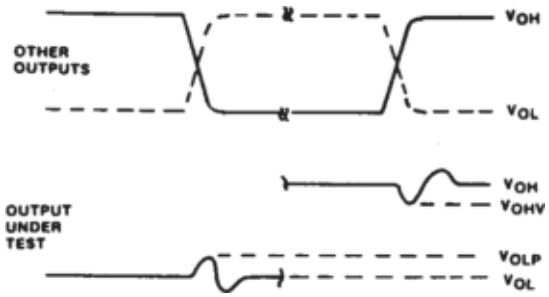

A. V_{OHV} AND V_{OLP} ARE MEASURED WITH RESPECT TO A GROUND REFERENCE NEAR THE OUTPUT UNDER TEST.
B. INPUT PULSES HAVE THE FOLLOWING CHARACTERISTICS: PRR ≤ 1 MHz, t_r = 3 ns, t_f = 3 ns, SKEW 1 ns.
C. R.F. FIXTURE WITH 700-MHz DESIGN RULES REQUIRED. IC SHOULD BE SOLDERED INTO TEST BOARD AND BYPASSED WITH 0.1 μF CAPACITOR. SCOPE AND PROBES REQUIRE 700-MHz BANDWIDTH.
D. 92CS-42406

Figure 5-1. Simultaneous Switching Transient Waveforms.

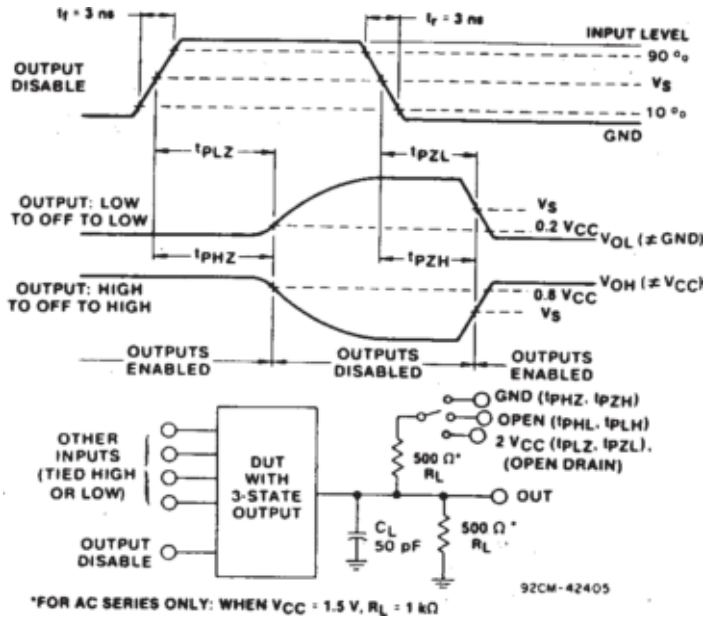

Figure 5-2. Three-state Propagation Delay Times and Test Circuit.

Copyright © 2024 Texas Instruments Incorporated

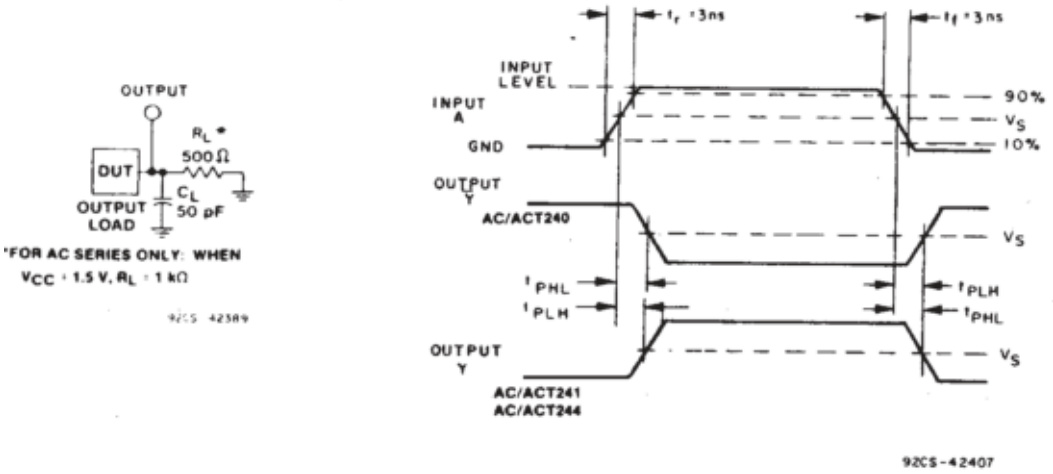

Figure 5-3. Propagation Delay Times and Test Circuit.

	CDX4AC	CDX4ACT
Input Level	V_{CC}	3 V
Input Switching Voltage, V_S	0.5 V_{CC}	1.5 V
Output Switching Voltage, V_S	0.5 V_{CC}	0.5 V_{CC}

6 Detailed Description

6.1 Overview

The RCA CD54/74AC240, CD54/74AC241, and CD54/74AC244 and the CD54/74ACT240, CD54/74ACT241, and CD54/74ACT244 3-state octal buffer/line drivers use the RCA ADVANCED CMOS technology. The CD54/74AC/ACT240 and CD54/74AC/ACT244 have active-LOW output enables ($\overline{1OE}$, $\overline{2OE}$). The CD54/74AC/ACT241 has one active-LOW ($\overline{1OE}$) and one active-HIGH (2OE) output enable.

The CD74AC240 and CD74ACT240 are supplied in 20-lead dual-in-line plastic packages (E suffix) and 20-lead small-outline packages (M and M96 suffixes). The CD74AC241 is supplied in 20-lead dual-in-line plastic packages (E suffix) and the CD74ACT241 is supplied in 20-lead dual-in-line plastic packages (E suffix) and 20-lead small-outline packages (M96 suffix). The CD74AC244 and CD74ACT244 are supplied in 20-lead dual-in-line plastic packages (E suffix), 20-lead small-outline packages (M and M96 suffixes), and 20-lead shrink small-outline packages (SM96 suffix). These package types are operable over the following temperature ranges: Commercial (0 to 70\u0001C); Industrial (−40 to +85\u0001C); and Extended Industrial/Military (−55 to +125\u0001C).

The CD54AC240 and CD54AC244 and the CD54ACT240, CD54ACT241, and CD54ACT244 are supplied in 20-lead hermetic dual-in-line ceramic packages (F3A suffix) and are operable over the −55 to +125\u0001C temperature range.

6.2 Functional Block Diagram

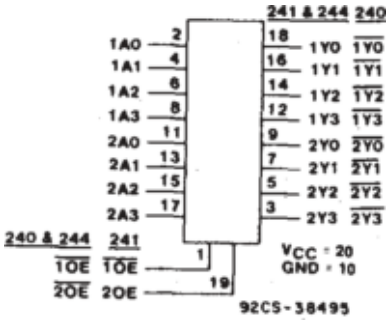

6.3 Device Functional Modes

Table 6-1. Truth Tables

INPUTS		OUTPUT
$\overline{10E}$, $\overline{20E}$	A	Y
L	L	H
L	H	L
H	X	Z
(AC/ACT240)		

INPUTS		OUTPUT
$\overline{10E}$, $\overline{20E}$	A	Y
L	L	L
L	H	H
H	X	Z
(AC/ACT244)		

Copyright © 2024 Texas Instruments Incorporated

INPUTS		OUTPUT	INPUTS		OUTPUT
$\overline{10E}$	1A	1Y	20E	2A	2Y
L	L	L	L	X	Z
L	H	H	H	L	L
H	X	Z	H	H	H
(AC/ACT241)					

7 Application and Implementation

Note

Information in the following applications sections is not part of the TI component specification, and TI does not warrant its accuracy or completeness. TI's customers are responsible for determining suitability of components for their purposes, as well as validating and testing their design implementation to confirm system functionality.

7.1 Power Supply Recommendations

The power supply can be any voltage between the min and max supply voltage rating located in *Section 4.2*.

Each V_{CC} terminal should have a good bypass capacitor to prevent power disturbance. For devices with a single supply, TI recommends 0.1 µF and if there are multiple V_{CC} terminals, then TI recommends .01 µF or .022 µF for each power terminal. It is okay to parallel multiple bypass capacitors to reject different frequencies of noise. A 0.1 µF and 1 µF are commonly used in parallel. The bypass capacitor should be installed as close to the power terminal as possible for best results.

7.2 Layout

7.2.1 Layout Guidelines

When using multiple bit logic devices inputs should not ever float.

In many cases, functions or parts of functions of digital logic devices are unused, for example, when only two inputs of a triple-input AND gate are used or only 3 of the 4 buffer gates are used. Such input pins should not be left unconnected because the undefined voltages at the outside connections result in undefined operational states. Specified below are the rules that must be observed under all circumstances. All unused inputs of digital logic devices must be connected to a high or low bias to prevent them from floating. The logic level that should be applied to any particular unused input depends on the function of the device. Generally they will be tied to GND or V_{CC} whichever make more sense or is more convenient. It is generally okay to float outputs unless the part is a transceiver. If the transceiver has an output enable pin it will disable the outputs section of the part when asserted. This does not disable the input section of the IOs so they cannot float when disabled.

Copyright © 2024 Texas Instruments Incorporated

8 Device and Documentation Support

8.1 Documentation Support (Analog)

8.1.1 Related Documentation

The table below lists quick access links. Categories include technical documents, support and community resources, tools and software, and quick access to sample or buy.

Table 8-1. Related Links

PARTS	PRODUCT FOLDER	SAMPLE & BUY	TECHNICAL DOCUMENTS	TOOLS & SOFTWARE	SUPPORT & COMMUNITY
CD74AC240	Click here	Click here	Click here	Click here	Click here
CD74AC244	Click here	Click here	Click here	Click here	Click here
CD74ACT240	Click here	Click here	Click here	Click here	Click here
CD74ACT241	Click here	Click here	Click here	Click here	Click here
CD74ACT244	Click here	Click here	Click here	Click here	Click here

8.2 Receiving Notification of Documentation Updates

To receive notification of documentation updates, navigate to the device product folder on ti.com. Click on *Notifications* to register and receive a weekly digest of any product information that has changed. For change details, review the revision history included in any revised document.

8.3 Support Resources

TI E2E™ support forums are an engineer's go-to source for fast, verified answers and design help — straight from the experts. Search existing answers or ask your own question to get the quick design help you need.

Linked content is provided "AS IS" by the respective contributors. They do not constitute TI specifications and do not necessarily reflect TI's views; see TI's Terms of Use.

8.4 Trademarks

TI E2E™ is a trademark of Texas Instruments.
All trademarks are the property of their respective owners.

8.5 Electrostatic Discharge Caution

This integrated circuit can be damaged by ESD. Texas Instruments recommends that all integrated circuits be handled with appropriate precautions. Failure to observe proper handling and installation procedures can cause damage.

ESD damage can range from subtle performance degradation to complete device failure. Precision integrated circuits may be more susceptible to damage because very small parametric changes could cause the device not to meet its published specifications.

8.6 Glossary

TI Glossary This glossary lists and explains terms, acronyms, and definitions.

9 Revision History

NOTE: Page numbers for previous revisions may differ from page numbers in the current version.

Changes from Revision B (January 2004) to Revision C (May 2024) **Page**

- Added *Device Information* table, *Pin Functions* table, *Thermal Information* table, *Device Functional Modes*, *Application and Implementation* section, *Device and Documentation Support* section, and *Mechanical, Packaging, and Orderable Information* section 1
- Updated RθJA value: DW = 50 to 101.2, all values in °C/W 5

10 Mechanical, Packaging, and Orderable Information

The following pages include mechanical, packaging, and orderable information. This information is the most current data available for the designated devices. This data is subject to change without notice and revision of this document. For browser-based versions of this data sheet, refer to the left-hand navigation.

Copyright © 2024 Texas Instruments Incorporated

PACKAGING INFORMATION

Orderable part number	Status (1)	Material type (2)	Package | Pins	Package qty | Carrier	RoHS (3)	Lead finish/ Ball material (4)	MSL rating/ Peak reflow (5)	Op temp (°C)	Part marking (6)
CD54AC240F3A	Active	Production	CDIP (J) | 20	20 | TUBE	No	SNPB	N/A for Pkg Type	-55 to 125	CD54AC240F3A
CD54AC240F3A.A	Active	Production	CDIP (J) | 20	20 | TUBE	No	SNPB	N/A for Pkg Type	-55 to 125	CD54AC240F3A
CD54AC244F3A	Active	Production	CDIP (J) | 20	20 | TUBE	No	SNPB	N/A for Pkg Type	-55 to 125	CD54AC244F3A
CD54AC244F3A.A	Active	Production	CDIP (J) | 20	20 | TUBE	No	SNPB	N/A for Pkg Type	-55 to 125	CD54AC244F3A
CD54ACT240F3A	Active	Production	CDIP (J) | 20	20 | TUBE	No	SNPB	N/A for Pkg Type	-55 to 125	CD54ACT240F3A
CD54ACT240F3A.A	Active	Production	CDIP (J) | 20	20 | TUBE	No	SNPB	N/A for Pkg Type	-55 to 125	CD54ACT240F3A
CD54ACT241F3A	Active	Production	CDIP (J) | 20	20 | TUBE	No	SNPB	N/A for Pkg Type	-55 to 125	CD54ACT241F3A
CD54ACT241F3A.A	Active	Production	CDIP (J) | 20	20 | TUBE	No	SNPB	N/A for Pkg Type	-55 to 125	CD54ACT241F3A
CD54ACT244F3A	Active	Production	CDIP (J) | 20	20 | TUBE	No	SNPB	N/A for Pkg Type	-55 to 125	CD54ACT244F3A
CD54ACT244F3A.A	Active	Production	CDIP (J) | 20	20 | TUBE	No	SNPB	N/A for Pkg Type	-55 to 125	CD54ACT244F3A
CD74AC240E	Active	Production	PDIP (N) | 20	20 | TUBE	Yes	NIPDAU	N/A for Pkg Type	-55 to 125	CD74AC240E
CD74AC240E.A	Active	Production	PDIP (N) | 20	20 | TUBE	Yes	NIPDAU	N/A for Pkg Type	-55 to 125	CD74AC240E
CD74AC240EE4	Active	Production	PDIP (N) | 20	20 | TUBE	Yes	NIPDAU	N/A for Pkg Type	-55 to 125	CD74AC240E
CD74AC240M	Obsolete	Production	SOIC (DW) | 20	-	-	Call TI	Call TI	-55 to 125	AC240M
CD74AC240M96	Active	Production	SOIC (DW) | 20	2000 | LARGE T&R	Yes	NIPDAU	Level-1-260C-UNLIM	-55 to 125	AC240M
CD74AC240M96.A	Active	Production	SOIC (DW) | 20	2000 | LARGE T&R	Yes	NIPDAU	Level-1-260C-UNLIM	-55 to 125	AC240M
CD74AC244E	Active	Production	PDIP (N) | 20	20 | TUBE	Yes	NIPDAU	N/A for Pkg Type	-55 to 125	CD74AC244E
CD74AC244E.A	Active	Production	PDIP (N) | 20	20 | TUBE	Yes	NIPDAU	N/A for Pkg Type	-55 to 125	CD74AC244E
CD74AC244M	Obsolete	Production	SOIC (DW) | 20	-	-	Call TI	Call TI	-55 to 125	AC244M
CD74AC244M96	Active	Production	SOIC (DW) | 20	2000 | LARGE T&R	Yes	NIPDAU	Level-1-260C-UNLIM	-55 to 125	(AC244, AC244M)
CD74AC244M96.A	Active	Production	SOIC (DW) | 20	2000 | LARGE T&R	Yes	NIPDAU	Level-1-260C-UNLIM	-55 to 125	(AC244, AC244M)
CD74ACT240E	Active	Production	PDIP (N) | 20	20 | TUBE	Yes	NIPDAU	N/A for Pkg Type	-55 to 125	CD74ACT240E
CD74ACT240E.A	Active	Production	PDIP (N) | 20	20 | TUBE	Yes	NIPDAU	N/A for Pkg Type	-55 to 125	CD74ACT240E
CD74ACT240M	Obsolete	Production	SOIC (DW) | 20	-	-	Call TI	Call TI	-55 to 125	ACT240M
CD74ACT240M96	Active	Production	SOIC (DW) | 20	2000 | LARGE T&R	Yes	NIPDAU	Level-1-260C-UNLIM	-55 to 125	ACT240M
CD74ACT240M96.A	Active	Production	SOIC (DW) | 20	2000 | LARGE T&R	Yes	NIPDAU	Level-1-260C-UNLIM	-55 to 125	ACT240M
CD74ACT240M96E4	Active	Production	SOIC (DW) | 20	2000 | LARGE T&R	Yes	NIPDAU	Level-1-260C-UNLIM	-55 to 125	ACT240M
CD74ACT241E	Active	Production	PDIP (N) | 20	20 | TUBE	Yes	NIPDAU	N/A for Pkg Type	-55 to 125	CD74ACT241E
CD74ACT241E.A	Active	Production	PDIP (N) | 20	20 | TUBE	Yes	NIPDAU	N/A for Pkg Type	-55 to 125	CD74ACT241E

Orderable part number	Status (1)	Material type (2)	Package | Pins	Package qty | Carrier	RoHS (3)	Lead finish/ Ball material (4)	MSL rating/ Peak reflow (5)	Op temp (°C)	Part marking (6)
CD74ACT241M96	Active	Production	SOIC (DW) | 20	2000 | LARGE T&R	Yes	NIPDAU	Level-1-260C-UNLIM	-55 to 125	ACT241M
CD74ACT241M96.A	Active	Production	SOIC (DW) | 20	2000 | LARGE T&R	Yes	NIPDAU	Level-1-260C-UNLIM	-55 to 125	ACT241M
CD74ACT244E	Active	Production	PDIP (N) | 20	20 | TUBE	Yes	NIPDAU	N/A for Pkg Type	-55 to 125	CD74ACT244E
CD74ACT244E.A	Active	Production	PDIP (N) | 20	20 | TUBE	Yes	NIPDAU	N/A for Pkg Type	-55 to 125	CD74ACT244E
CD74ACT244M96	Active	Production	SOIC (DW) | 20	2000 | LARGE T&R	Yes	NIPDAU	Level-1-260C-UNLIM	-55 to 125	(ACT244, ACT244M)
CD74ACT244M96.A	Active	Production	SOIC (DW) | 20	2000 | LARGE T&R	Yes	NIPDAU	Level-1-260C-UNLIM	-55 to 125	(ACT244, ACT244M)

(1) **Status:** For more details on status, see our product life cycle.

(2) **Material type:** When designated, preproduction parts are prototypes/experimental devices, and are not yet approved or released for full production. Testing and final process, including without limitation quality assurance, reliability performance testing, and/or process qualification, may not yet be complete, and this item is subject to further changes or possible discontinuation. If available for ordering, purchases will be subject to an additional waiver at checkout, and are intended for early internal evaluation purposes only. These items are sold without warranties of any kind.

(3) **RoHS values:** Yes, No, RoHS Exempt. See the TI RoHS Statement for additional information and value definition.

(4) **Lead finish/Ball material:** Parts may have multiple material finish options. Finish options are separated by a vertical ruled line. Lead finish/Ball material values may wrap to two lines if the finish value exceeds the maximum column width.

(5) **MSL rating/Peak reflow:** The moisture sensitivity level ratings and peak solder (reflow) temperatures. In the event that a part has multiple moisture sensitivity ratings, only the lowest level per JEDEC standards is shown. Refer to the shipping label for the actual reflow temperature that will be used to mount the part to the printed circuit board.

(6) **Part marking:** There may be an additional marking, which relates to the logo, the lot trace code information, or the environmental category of the part.

Multiple part markings will be inside parentheses. Only one part marking contained in parentheses and separated by a "~" will appear on a part. If a line is indented then it is a continuation of the previous line and the two combined represent the entire part marking for that device.

Important Information and Disclaimer: The information provided on this page represents TI's knowledge and belief as of the date that it is provided. TI bases its knowledge and belief on information provided by third parties, and makes no representation or warranty as to the accuracy of such information. Efforts are underway to better integrate information from third parties. TI has taken and continues to take reasonable steps to provide representative and accurate information but may not have conducted destructive testing or chemical analysis on incoming materials and chemicals. TI and TI suppliers consider certain information to be proprietary, and thus CAS numbers and other limited information may not be available for release.

In no event shall TI's liability arising out of such information exceed the total purchase price of the TI part(s) at issue in this document sold by TI to Customer on an annual basis.

OTHER QUALIFIED VERSIONS OF CD54AC240, CD54AC244, CD54ACT240, CD54ACT241, CD54ACT244, CD74AC240, CD74AC244, CD74ACT240, CD74ACT241, CD74ACT244 :

- Catalog : CD74AC240, CD74AC244, CD74ACT240, CD74ACT241, CD74ACT244
- Military : CD54AC240, CD54AC244, CD54ACT240, CD54ACT241, CD54ACT244

NOTE: Qualified Version Definitions:

- Catalog - TI's standard catalog product
- Military - QML certified for Military and Defense Applications

TAPE AND REEL INFORMATION

REEL DIMENSIONS

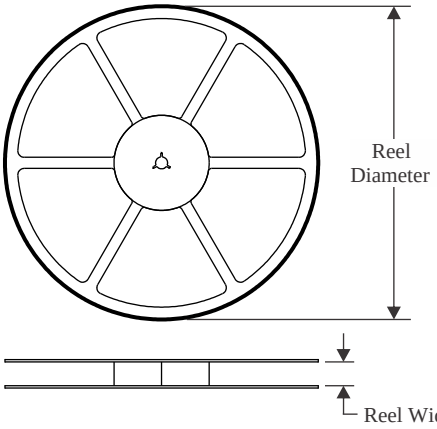

TAPE DIMENSIONS

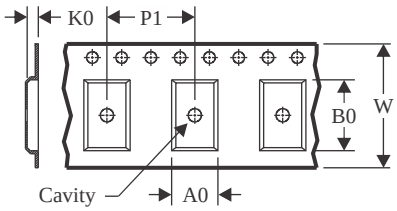

A0	Dimension designed to accommodate the component width
B0	Dimension designed to accommodate the component length
K0	Dimension designed to accommodate the component thickness
W	Overall width of the carrier tape
P1	Pitch between successive cavity centers

QUADRANT ASSIGNMENTS FOR PIN 1 ORIENTATION IN TAPE

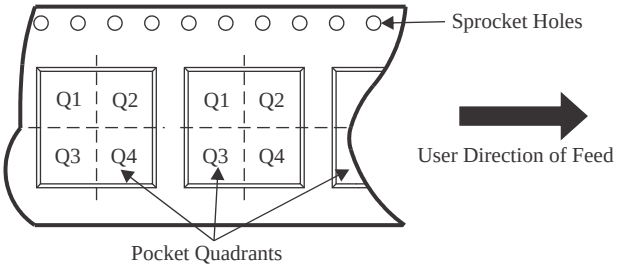

*All dimensions are nominal

Device	Package Type	Package Drawing	Pins	SPQ	Reel Diameter (mm)	Reel Width W1 (mm)	A0 (mm)	B0 (mm)	K0 (mm)	P1 (mm)	W (mm)	Pin1 Quadrant
CD74AC240M96	SOIC	DW	20	2000	330.0	24.4	10.8	13.3	2.7	12.0	24.0	Q1
CD74AC244M96	SOIC	DW	20	2000	330.0	24.4	10.8	13.3	2.7	12.0	24.0	Q1
CD74AC244M96	SOIC	DW	20	2000	330.0	24.4	10.9	13.3	2.7	12.0	24.0	Q1
CD74ACT240M96	SOIC	DW	20	2000	330.0	24.4	10.8	13.3	2.7	12.0	24.0	Q1
CD74ACT241M96	SOIC	DW	20	2000	330.0	24.4	10.8	13.3	2.7	12.0	24.0	Q1
CD74ACT244M96	SOIC	DW	20	2000	330.0	24.4	10.8	13.3	2.7	12.0	24.0	Q1
CD74ACT244M96	SOIC	DW	20	2000	330.0	24.4	10.9	13.3	2.7	12.0	24.0	Q1

TAPE AND REEL BOX DIMENSIONS

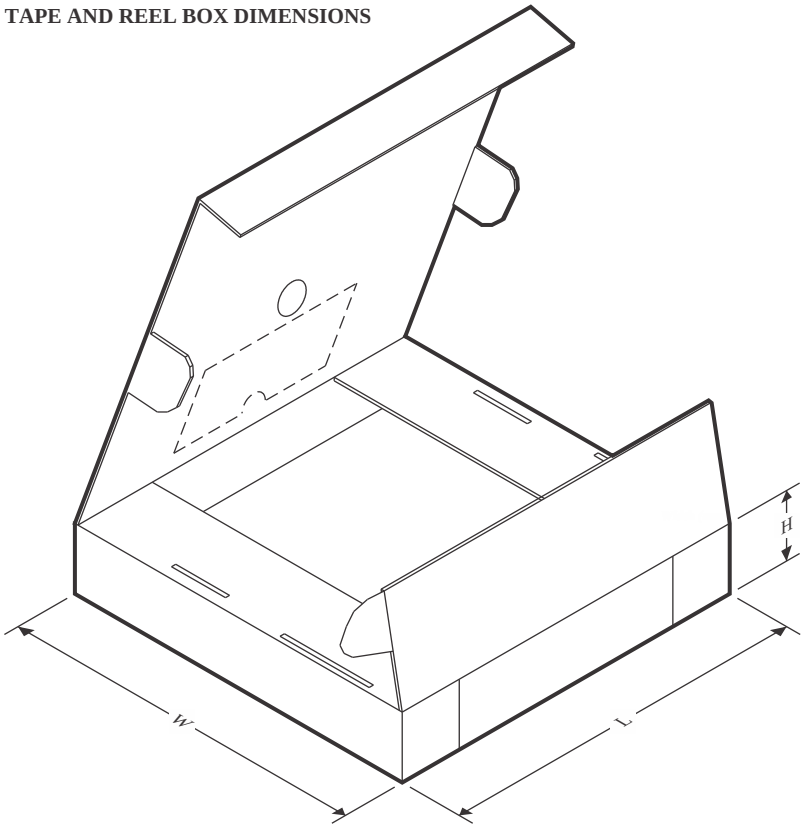

*All dimensions are nominal

Device	Package Type	Package Drawing	Pins	SPQ	Length (mm)	Width (mm)	Height (mm)
CD74AC240M96	SOIC	DW	20	2000	356.0	356.0	45.0
CD74AC244M96	SOIC	DW	20	2000	356.0	356.0	45.0
CD74AC244M96	SOIC	DW	20	2000	356.0	356.0	45.0
CD74ACT240M96	SOIC	DW	20	2000	356.0	356.0	45.0
CD74ACT241M96	SOIC	DW	20	2000	356.0	356.0	45.0
CD74ACT244M96	SOIC	DW	20	2000	356.0	356.0	45.0
CD74ACT244M96	SOIC	DW	20	2000	356.0	356.0	45.0

TUBE

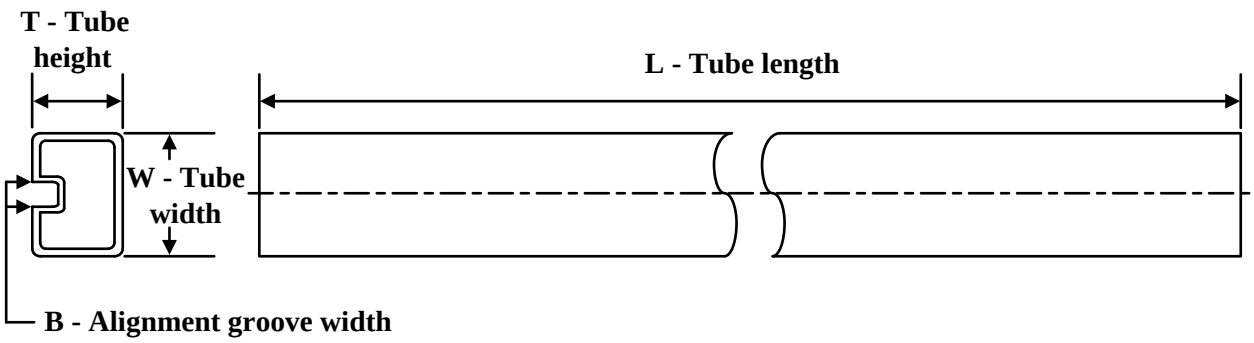

*All dimensions are nominal

Device	Package Name	Package Type	Pins	SPQ	L (mm)	W (mm)	T (µm)	B (mm)
CD74AC240E	N	PDIP	20	20	506	13.97	11230	4.32
CD74AC240E.A	N	PDIP	20	20	506	13.97	11230	4.32
CD74AC240EE4	N	PDIP	20	20	506	13.97	11230	4.32
CD74AC244E	N	PDIP	20	20	506	13.97	11230	4.32
CD74AC244E.A	N	PDIP	20	20	506	13.97	11230	4.32
CD74ACT240E	N	PDIP	20	20	506	13.97	11230	4.32
CD74ACT240E.A	N	PDIP	20	20	506	13.97	11230	4.32
CD74ACT241E	N	PDIP	20	20	506	13.97	11230	4.32
CD74ACT241E.A	N	PDIP	20	20	506	13.97	11230	4.32
CD74ACT244E	N	PDIP	20	20	506	13.97	11230	4.32
CD74ACT244E.A	N	PDIP	20	20	506	13.97	11230	4.32

J (R–GDIP–T**) CERAMIC DUAL IN–LINE PACKAGE

14 LEADS SHOWN

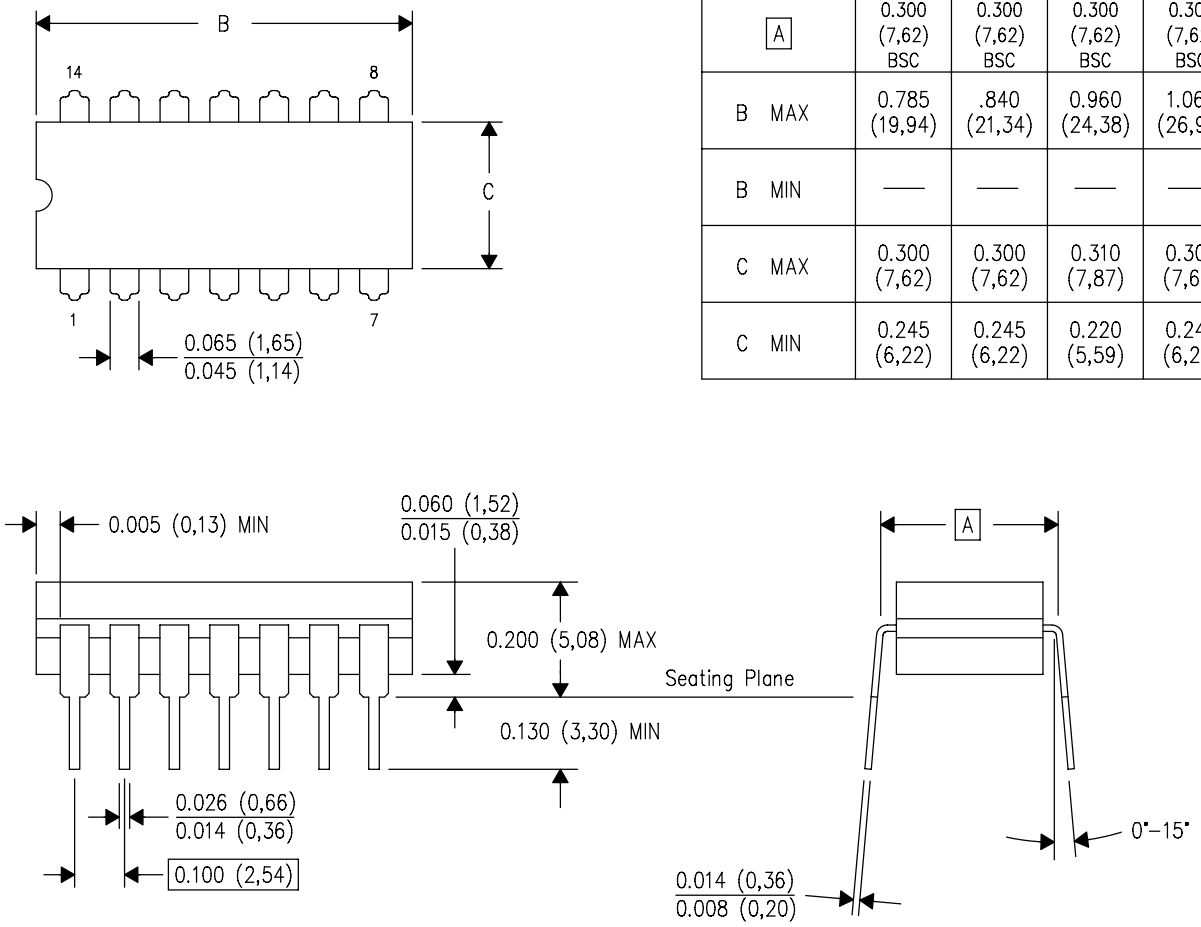

DIM \ PINS **	14	16	18	20
A	0.300 (7,62) BSC	0.300 (7,62) BSC	0.300 (7,62) BSC	0.300 (7,62) BSC
B MAX	0.785 (19,94)	.840 (21,34)	0.960 (24,38)	1.060 (26,92)
B MIN	—	—	—	—
C MAX	0.300 (7,62)	0.300 (7,62)	0.310 (7,87)	0.300 (7,62)
C MIN	0.245 (6,22)	0.245 (6,22)	0.220 (5,59)	0.245 (6,22)

4040083/F 03/03

NOTES:
A. All linear dimensions are in inches (millimeters).
B. This drawing is subject to change without notice.
C. This package is hermetically sealed with a ceramic lid using glass frit.
D. Index point is provided on cap for terminal identification only on press ceramic glass frit seal only.
E. Falls within MIL STD 1835 GDIP1–T14, GDIP1–T16, GDIP1–T18 and GDIP1–T20.

N (R–PDIP–T**) PLASTIC DUAL–IN–LINE PACKAGE

16 PINS SHOWN

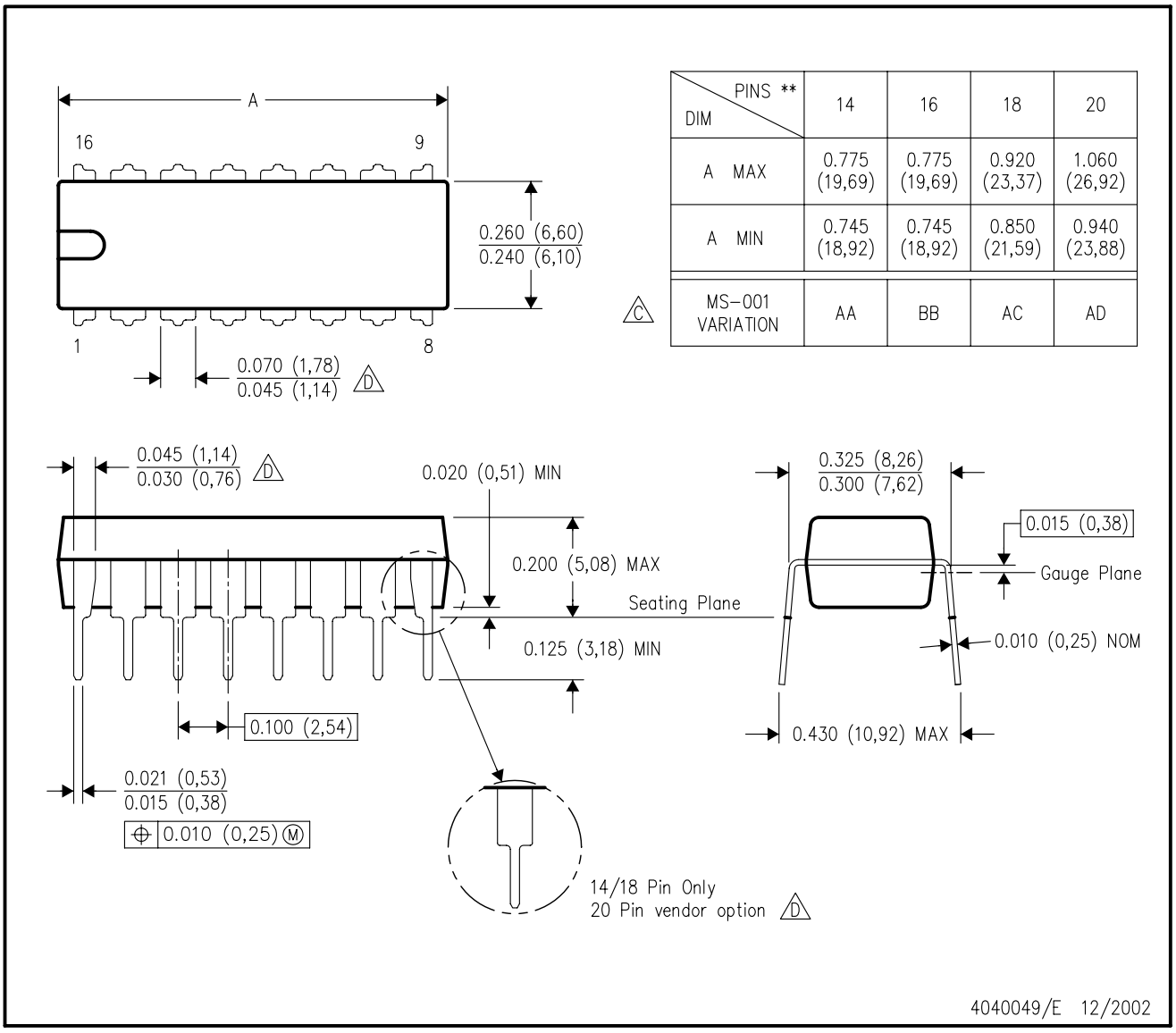

DIM \ PINS **	14	16	18	20
A MAX	0.775 (19,69)	0.775 (19,69)	0.920 (23,37)	1.060 (26,92)
A MIN	0.745 (18,92)	0.745 (18,92)	0.850 (21,59)	0.940 (23,88)
MS–001 VARIATION (C)	AA	BB	AC	AD

NOTES:
A. All linear dimensions are in inches (millimeters).
B. This drawing is subject to change without notice.
C. Falls within JEDEC MS–001, except 18 and 20 pin minimum body length (Dim A).
D. The 20 pin end lead shoulder width is a vendor option, either half or full width.

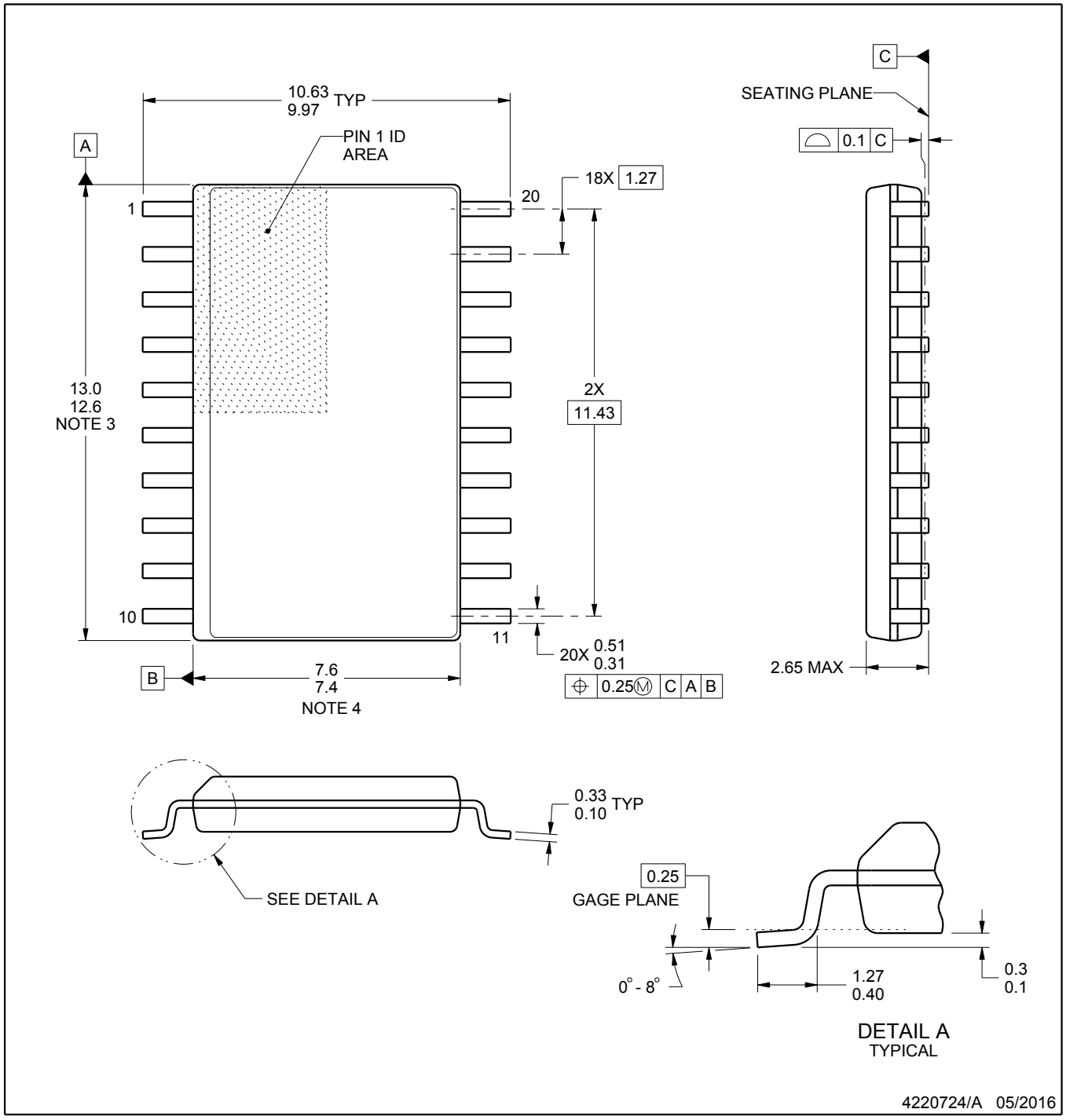

NOTES:

1. All linear dimensions are in millimeters. Dimensions in parenthesis are for reference only. Dimensioning and tolerancing per ASME Y14.5M.
2. This drawing is subject to change without notice.
3. This dimension does not include mold flash, protrusions, or gate burrs. Mold flash, protrusions, or gate burrs shall not exceed 0.15 mm per side.
4. This dimension does not include interlead flash. Interlead flash shall not exceed 0.43 mm per side.
5. Reference JEDEC registration MS-013.

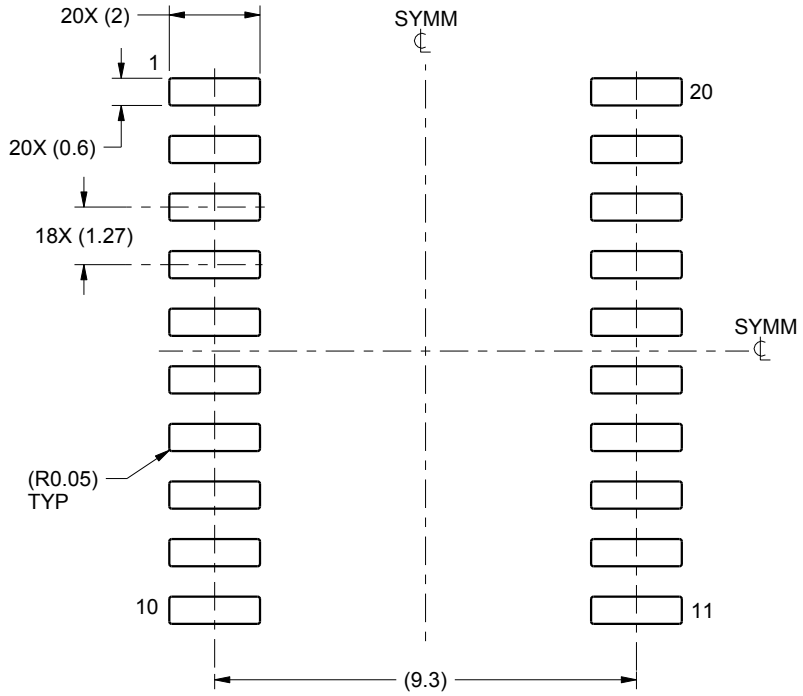

LAND PATTERN EXAMPLE
SCALE:6X

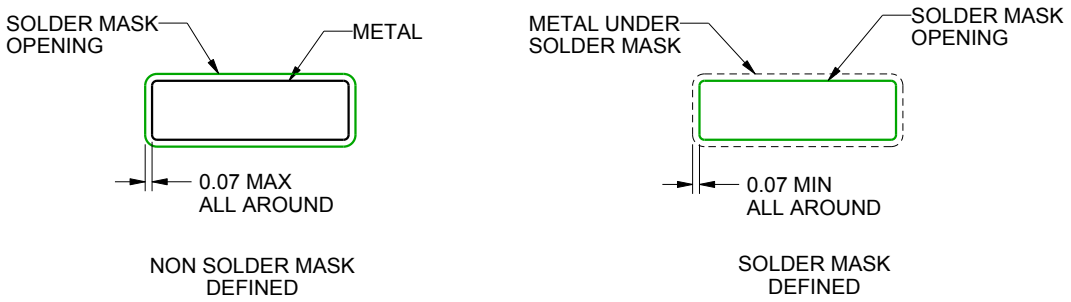

SOLDER MASK DETAILS

4220724/A 05/2016

NOTES: (continued)

6. Publication IPC-7351 may have alternate designs.
7. Solder mask tolerances between and around signal pads can vary based on board fabrication site.

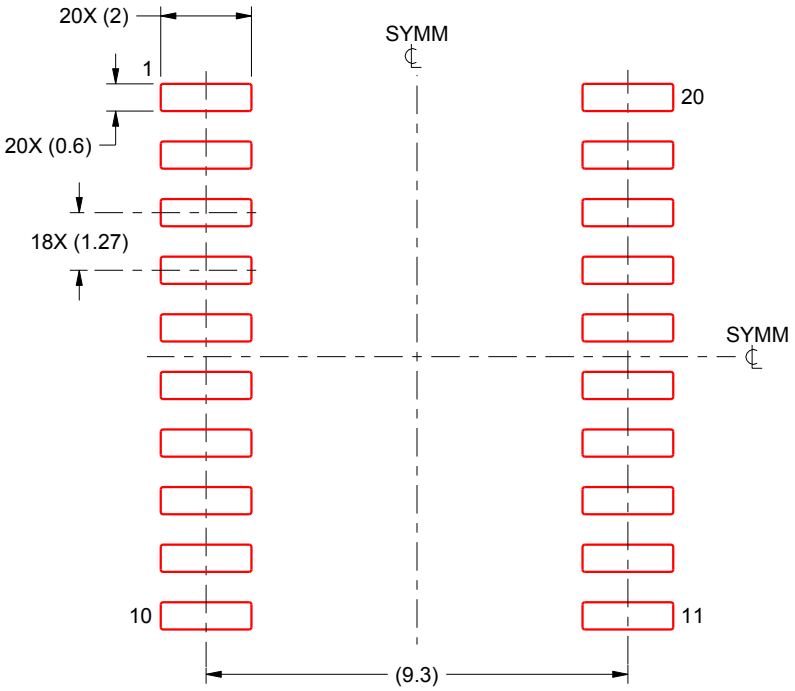

SOLDER PASTE EXAMPLE
BASED ON 0.125 mm THICK STENCIL
SCALE:6X

4220724/A 05/2016

NOTES: (continued)

8. Laser cutting apertures with trapezoidal walls and rounded corners may offer better paste release. IPC-7525 may have alternate design recommendations.
9. Board assembly site may have different recommendations for stencil design.

IMPORTANT NOTICE AND DISCLAIMER

TI PROVIDES TECHNICAL AND RELIABILITY DATA (INCLUDING DATASHEETS), DESIGN RESOURCES (INCLUDING REFERENCE DESIGNS), APPLICATION OR OTHER DESIGN ADVICE, WEB TOOLS, SAFETY INFORMATION, AND OTHER RESOURCES “AS IS” AND WITH ALL FAULTS, AND DISCLAIMS ALL WARRANTIES, EXPRESS AND IMPLIED, INCLUDING WITHOUT LIMITATION ANY IMPLIED WARRANTIES OF MERCHANTABILITY, FITNESS FOR A PARTICULAR PURPOSE OR NON-INFRINGEMENT OF THIRD PARTY INTELLECTUAL PROPERTY RIGHTS.

These resources are intended for skilled developers designing with TI products. You are solely responsible for (1) selecting the appropriate TI products for your application, (2) designing, validating and testing your application, and (3) ensuring your application meets applicable standards, and any other safety, security, regulatory or other requirements.

These resources are subject to change without notice. TI grants you permission to use these resources only for development of an application that uses the TI products described in the resource. Other reproduction and display of these resources is prohibited. No license is granted to any other TI intellectual property right or to any third party intellectual property right. TI disclaims responsibility for, and you fully indemnify TI and its representatives against any claims, damages, costs, losses, and liabilities arising out of your use of these resources.

TI’s products are provided subject to TI’s Terms of Sale, TI’s General Quality Guidelines, or other applicable terms available either on ti.com or provided in conjunction with such TI products. TI’s provision of these resources does not expand or otherwise alter TI’s applicable warranties or warranty disclaimers for TI products. Unless TI explicitly designates a product as custom or customer-specified, TI products are standard, catalog, general purpose devices.

TI objects to and rejects any additional or different terms you may propose.

Copyright © 2026, Texas Instruments Incorporated

Last updated 10/2025