CDx4HC138, CDx4HCT138, CDx4HC238, CDx4HCT238 High-Speed CMOS Logic 3- to 8-Line Decoder/Demultiplexer Inverting and Noninverting

1 Features

- Select one of eight data outputs:
  - Active low for '138
  - Active high for '238
- I/O port or memory selector
- Three enable inputs to simplify cascading
- Typical propagation delay of 13 ns at V_{CC} = 5 V, C_L = 15 pF, T_A = 25°C
- Fanout (over temperature range)
  - Bus driver outputs: 15 LSTTL loads
  - Standard outputs: 10 LSTTL loads
- Wide operating temp range: -55°C to 125°C
- Balanced propagation delay and transition times
- Significant power reduction compared to LSTTL logic ICs
- HC types
  - 2 V to 6 V operation
  - High noise immunity: N_{IL} = 30%, N_{IH} = 30% of V_{CC} at V_{CC} = 5 V
- HCT types
  - 4.5-V to 5.5-V operation
  - Direct LSTTL input logic compatibility, V_{IL}= 0.8 V (Max), V_{IH} = 2 V (Min)
  - CMOS input compatibility, $I_I \leq 1\mu A$ at V_{OL}, V_{OH}

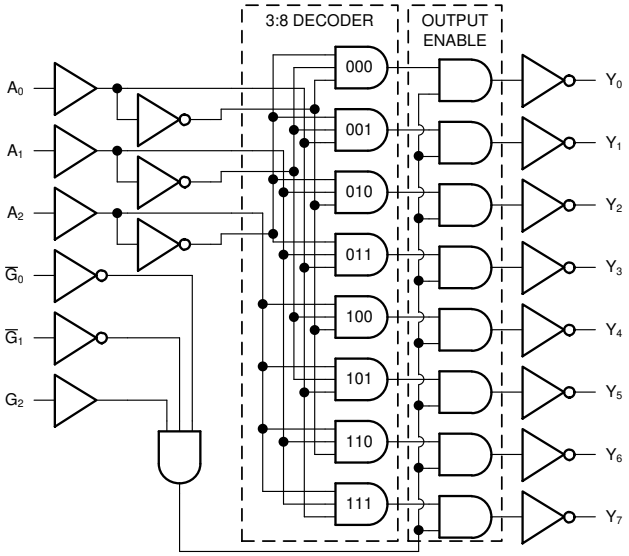

Functional Block Diagram '138

2 Description

The CDx4HC(T)138 and '238 are three to eight decoders with one standard output strobe (G_2) and two active low output strobes ($\overline{G}_1$ and $\overline{G}_0$). When the outputs are gated by any of the strobe inputs, they are all forced into the high state. When the outputs are not disabled by the strobe inputs, only the selected output is low while all others are high.

The CDx4HC(T)238 is a three to eight decoder with one standard output strobe (G_2) and two active low output strobes ($\overline{G}_1$ and $\overline{G}_0$). When the outputs are gated by any of the strobe inputs, they are all forced into the low state. When the outputs are not disabled by the strobe inputs, only the selected output is high while all others are low.

Device Information

PART NUMBER	PACKAGE(1)	BODY SIZE (NOM)
CD74HC138E	PDIP (16)	25.40 mm × 6.35 mm
CD74HCT138E	PDIP (16)	25.40 mm × 6.35 mm
CD74HCT238E	PDIP (16)	25.40 mm × 6.35 mm
CD74HC138M	SOIC (16)	9.90 mm × 3.90 mm
CD74HCT238M	SOIC (16)	9.90 mm × 3.90 mm
CD74HC238NS	SO (16)	10.20 mm × 5.30 mm
CD74HC238PW	TSSOP (16)	5.00 mm × 4.40 mm
CD74HCT238PW	TSSOP (16)	5.00 mm × 4.40 mm
CD54HC138F	CDIP (16)	21.34 mm × 6.92 mm
CD54HCT138F	CDIP (16)	21.34 mm × 6.92 mm
CD54HCT238F	CDIP (16)	21.34 mm × 6.92 mm

(1) For all available packages, see the orderable addendum at the end of the data sheet.

An IMPORTANT NOTICE at the end of this data sheet addresses availability, warranty, changes, use in safety-critical applications, intellectual property matters and other important disclaimers. PRODUCTION DATA.

Table of Contents

1 Features....1
2 Description....1
3 Revision History....2
4 Pin Configuration and Functions....3
5 Specifications....4
5.1 Absolute Maximum Ratings....4
5.2 Recommended Operating Conditions....4
5.3 Thermal Information....4
5.4 Electrical Characteristics....5
5.5 Switching Characteristics[(2)]....6
6 Parameter Measurement Information....7
7 Detailed Description....8
7.1 Overview....8
7.2 Functional Block Diagram....8
7.3 Device Functional Modes....10
8 Power Supply Recommendations....11
9 Layout....11
9.1 Layout Guidelines....11
10 Device and Documentation Support....12
10.1 Documentation Support....12
10.2 Receiving Notification of Documentation Updates....12
10.3 Support Resources....12
10.4 Trademarks....12
10.5 Electrostatic Discharge Caution....12
10.6 Glossary....12
11 Mechanical, Packaging, and Orderable Information....12

3 Revision History

NOTE: Page numbers for previous revisions may differ from page numbers in the current version.

Changes from Revision I (August 2004) to Revision J (November 2021)	Page
• Updated the numbering, formatting, tables, figures, and cross-references throughout the document to reflect modern datasheet standards	1
• Updated pin names to match current TI naming conventions. E_3 is now G_2, $\overline{E}_2$ is now $\overline{G}_1$, $\overline{E}_1$ is now $\overline{G}_0$	1

Copyright © 2021 Texas Instruments Incorporated

4 Pin Configuration and Functions

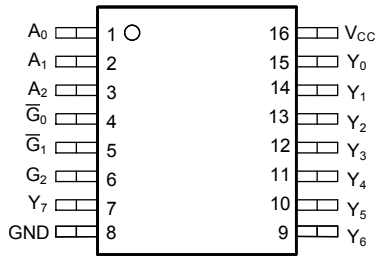

J, N, D, NS, or PW package
16-Pin CDIP, PDIP, SOIC, SO, or TSSOP
Top View

Pin Functions

PIN		I/O[(1)]	DESCRIPTION
SOIC or TSSOP NO.	NAME		
1	A_0	I	Address select 0
2	A_1	I	Address select 1
3	A_2	I	Address select 2
4	$\overline{G}_0$	I	Output strobe 0, active low
5	$\overline{G}_1$	I	Output strobe 1, active low
6	G_2	I	Output strobe 2
7	Y_7	O	Output 7
8	GND	—	Ground
9	Y_6	O	Output 6
10	Y_5	O	Output 5
11	Y_4	O	Output 4
12	Y_3	O	Output 3
13	Y_2	O	Output 2
14	Y_1	O	Output 1
15	Y_0	O	Output 0
16	V_{CC}	—	Positive supply

(1) Signal Types: I = Input, O = Output, I/O = Input or Output.

Copyright © 2021 Texas Instruments Incorporated

5 Specifications

5.1 Absolute Maximum Ratings

over operating free-air temperature range (unless otherwise noted)[1]

			MIN	MAX	UNIT
V_{CC}	Supply voltage		-0.5	7	V
I_{IK}	Input clamp diode current	For V_I < 0.5V or V_I > V_{CC} + 0.5V		±20	mA
I_{OK}	Output clamp diode current	For V_O < -0.5V or V_O > V_{CC} + 0.5V		±20	mA
I_O	Output source or sink current per output pin	For V_O > -0.5V or V_O < V_{CC} + 0.5V		±25	mA
	Continuous current through V_{CC} or GND			±50	mA
T_J	Junction temperature			150	°C
T_{stg}	Storage temperature range		-65	150	°C
	Lead temperature (Soldering 10s) (SOIC - Lead Tips Only)			300	°C

(1) Stresses beyond those listed under *absolute maximum ratings* may cause permanent damage to the device. These are stress ratings only and functional operation of the device at these or any other conditions beyond those indicated under *recommended operating conditions* is not implied. Exposure to absolute-maximum-rated conditions for extended periods may affect device reliability.

5.2 Recommended Operating Conditions

			MIN	MAX	UNIT
V_{CC}	Supply voltage range	HC types	2	6	V
		HCT types	4.5	5.5	
V_I	Input voltage		0	V_{CC}	V
V_O	Output voltage		0	V_{CC}	V
t_t	Input rise and fall time	V_{CC} = 2V		1000	ns
		V_{CC} = 4.5V		500	
		V_{CC} = 6V		400	
T_A	Temperature range		-55	125	°C

5.3 Thermal Information

THERMAL METRIC		CD74HC(T)138, CD74HC(T)238				UNIT
		N (PDIP)	D (SOIC)	NS (SOP)	PW (TSSOP)	
		16 Pins	16 Pins	16 Pins	16 Pins	
$R_{\theta JA}$	Junction-to-ambient thermal resistance[1]	67	73	64	108	°C/W

(1) For more information about traditional and new thermal metrics, see the Semiconductor and IC package thermal metrics application report.

Copyright © 2021 Texas Instruments Incorporated

5.4 Electrical Characteristics

PARAMETER		TEST CONDITIONS[1]	V_{CC}(V)	25°C			-40°C to 85°C		-55°C to 125°C		UNIT
				MIN	TYP	MAX	MIN	MAX	MIN	MAX	
HC TYPES											
V_{IH}	High-level input voltage		2	1.5			1.5		1.5		V
			4.5	3.15			3.15		3.15		V
			6	4.2			4.2		4.2		V
V_{IL}	Low-level input voltage		2			0.5		0.5		0.5	V
			4.5			1.35		1.35		1.35	V
			6			1.8		1.8		1.8	V
V_{OH}	High-level output voltage	I_{OH} = – 20 µA	2	1.9			1.9		1.9		V
		I_{OH} = – 20 µA	4.5	4.4			4.4		4.4		V
		I_{OH} = – 20 µA	6	5.9			5.9		5.9		V
	High-level output voltage	I_{OH} = – 4 mA	4.5	3.98			3.84		3.7		V
		I_{OH} = – 5.2 mA	6	5.48			5.34		5.2		V
V_{OL}	Low-level output voltage	I_{OL} = 20 µA	2			0.1		0.1		0.1	V
		I_{OL} = 20 µA	4.5			0.1		0.1		0.1	V
		I_{OL} = 20 µA	6			0.1		0.1		0.1	V
	Low-level output voltage	I_{OL} = 4 mA	4.5			0.26		0.33		0.4	V
		I_{OL} = 5.2 mA	6			0.26		0.33		0.4	V
I_I	Input leakage current	V_I = V_{CC} or GND	6			±0.1		±1		±1	µA
I_{CC}	Supply current	V_I = V_{CC} or GND	6			8		80		160	µA
HCT TYPES											
V_{IH}	High-level input voltage		4.5 to 5.5	2			2		2		V
V_{IL}	Low-level input voltage		4.5 to 5.5			0.8		0.8		0.8	V
V_{OH}	High-level output voltage	I_{OH} = – 20 µA	4.5	4.4			4.4		4.4		V
	High-level output voltage	I_{OH} = – 4 mA	4.5	3.98			3.84		3.7		V
V_{OL}	Low-level output voltage	I_{OL} = 20 µA	4.5			0.1		0.1		0.1	V
	Low-level output voltage	I_{OH} = 4 mA	4.5			0.26		0.33		0.4	V
I_I	Input leakage current	V_I = V_{CC} and GND	5.5			±0.1		±1		±1	µA
I_{CC}	Supply current	V_I = V_{CC} and GND	5.5			8		80		160	µA
ΔI_{CC}	Additional supply current per input pin	A_0 - A_2 inputs held at V_{CC} – 2.1 V	4.5 to 5.5		100	540		675		735	µA
		$\overline{G}_0$ and $\overline{G}_1$ inputs held at V_{CC} – 2.1 V	4.5 to 5.5		100	450		562.5		612.5	µA
		G_2 input held at V_{CC} – 2.1 V	4.5 to 5.5		100	360		450		490	µA

(1) V_I = V_{IH} or V_{IL}, unless otherwise noted.

5.5 Switching Characteristics[2]

Input t_t = 6ns. (See Parameter Measurement Information)

PARAMETER		TEST CONDITIONS	V_{CC} (V)	25°C			-40°C to 85°C		-55°C to 125°C		UNIT
				MIN	TYP	MAX	MIN	MAX	MIN	MAX	
HC TYPES											
t_{pd}	Address to output	C_L = 50pF	2			150		190		225	ns
			4.5		13[3]	30		38		45	
		C_L = 50pF	6			26		33		38	
	Strobe $\overline{G}_0$, $\overline{G}_1$, G_2 to output HC/HCT 138	C_L = 50pF	2			150		190		265	ns
			4.5			30		38		53	
			6			26		33		45	
t_t	Output transition time	C_L = 50pF	2			75		95		110	MHz
			4.5			15		19		22	
			6			13		16		19	
C_{pd}	Power dissipation capacitance[1]	C_L = 15pF	5		67						pF
C_i	Input capacitance					10		10		10	pF
HCT TYPES											
t_{pd}	Address to output	C_L = 50pF	4.5		14[3]	35		44		53	ns
	Strobe G_2 to output HC/HCT138	C_L = 50pF	4.5			35		44		53	ns
	Strobe $\overline{G}_0$, $\overline{G}_1$ to output HC/HCT238	C_L = 15pF	4.5			40		50		60	ns
t_t	Output transition time	C_L= 15pF	4.5			15		19		22	
C_{pd}	Power dissipation capacitance[1]	C_L = 15pF	5		67						pF
C_i	Input capacitance					10		10		10	pF

(1) C_{PD} is used to determine the dynamic power consumption, per gate.
(2) For details on power calculation, see SCAA035B
(3) C_L = 15pF and V_{CC} = 5

Copyright © 2021 Texas Instruments Incorporated

6 Parameter Measurement Information

Phase relationships between waveforms were chosen arbitrarily. All input pulses are supplied by generators having the following characteristics: PRR ≤ 1 MHz, Z_O = 50 Ω, t_t < 6 ns.

For clock inputs, f_{max} is measured when the input duty cycle is 50%.

The outputs are measured one at a time with one input transition per measurement.

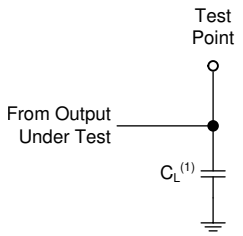

(1) C_L includes probe and test-fixture capacitance.

Figure 6-1. Load Circuit for Push-Pull Outputs

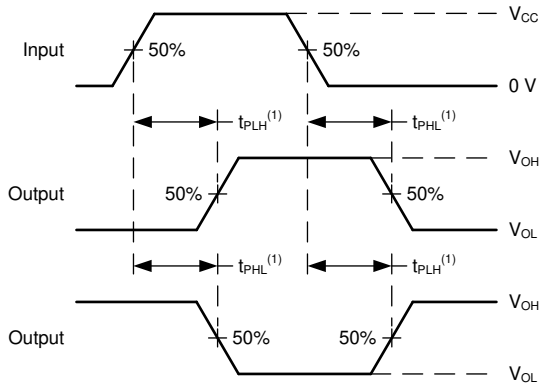

(1) The greater between t_{PLH} and t_{PHL} is the same as t_{pd}.

Figure 6-2. Voltage Waveforms, Propagation Delays for Standard CMOS Inputs

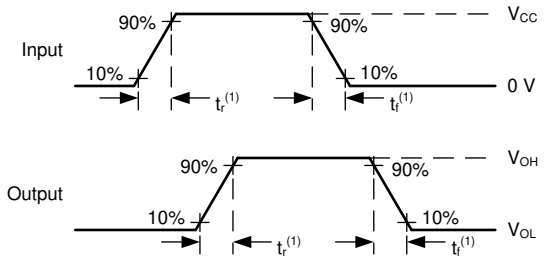

(1) The greater between t_r and t_f is the same as t_t.

Figure 6-3. Voltage Waveforms, Input and Output Transition Times for Standard CMOS Inputs

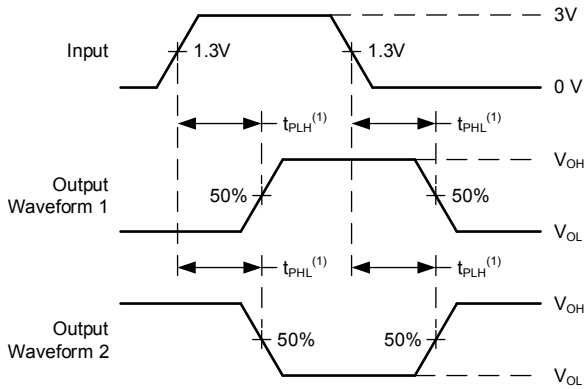

(1) The greater between t_{PLH} and t_{PHL} is the same as t_{pd}.

Figure 6-4. Voltage Waveforms, Propagation Delays for TTL-Compatible Inputs

7 Detailed Description

7.1 Overview

The CDx4HC(T)138 and '238 are high speed silicon gate CMOS decoders well suited to memory address decoding or data routing applications. They contain a single 3:8 decoder.

The CDx4HC(T)138 and '238 have three address select inputs (A_2, A_1, and A_0). The circuit functions as a normal one-of-eight decoder.

Three strobe inputs (G_2, $\overline{G}_1$ and $\overline{G}_0$) are provided to simplify cascading and to facilitate demultiplexing. When any input strobe is active, all outputs are forced into the high state for the '138 function. When any input strobe is active, all outputs are forced into the low state for the '238 function.

The demultiplexing function is accomplished by first using the select inputs to choose the desired output, and then using one of the strobe inputs as the data input.

The outputs for the CDx4HC(T)138 are normally low when selected. The outputs for the CDxHC(T)238 are normally high when selected.

7.2 Functional Block Diagram

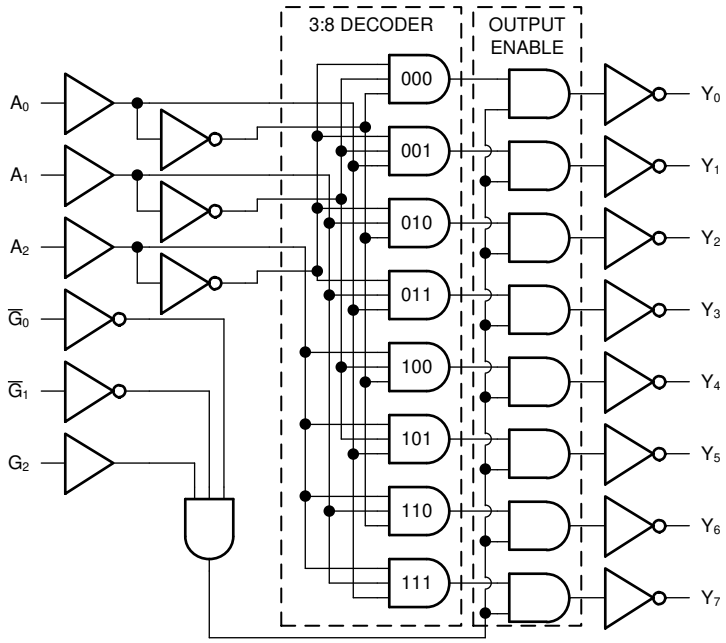

Figure 7-1. Functional Block Diagram '138

Copyright © 2021 Texas Instruments Incorporated

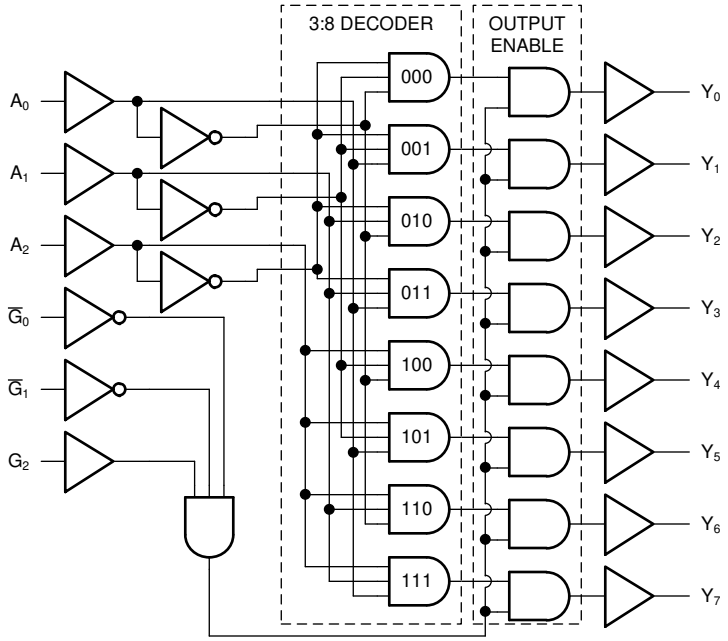

Figure 7-2. Functional Block Diagram '238

7.3 Device Functional Modes

Table 7-1. Function Table 'HC138, 'HCT138

INPUTS						OUTPUTS							
STROBE			ADDRESS										
G2	$\overline{G1}$	$\overline{G0}$	A_2	A_1	A_0	Y_0	Y_1	Y_2	Y_3	Y_4	Y_5	Y_6	Y_7
X	X	H	X	X	X	H	H	H	H	H	H	H	H
L	X	X	X	X	X	H	H	H	H	H	H	H	H
X	H	X	X	X	X	H	H	H	H	H	H	H	H
H	L	L	L	L	L	L	H	H	H	H	H	H	H
H	L	L	L	L	H	H	L	H	H	H	H	H	H
H	L	L	L	H	L	H	H	L	H	H	H	H	H
H	L	L	L	H	H	H	H	H	L	H	H	H	H
H	L	L	H	L	L	H	H	H	H	L	H	H	H
H	L	L	H	L	H	H	H	H	H	H	L	H	H
H	L	L	H	H	L	H	H	H	H	H	H	L	H
H	L	L	H	H	H	H	H	H	H	H	H	H	L

H = High Voltage Level, L = Low Voltage Level, X = Don’t Care

Table 7-2. Function Table 'HC238, 'HCT238

INPUTS						OUTPUTS							
STROBE			ADDRESS										
G2	$\overline{G1}$	$\overline{G0}$	A_2	A_1	A_0	Y_0	Y_1	Y_2	Y_3	Y_4	Y_5	Y_6	Y_7
X	X	H	X	X	X	L	L	L	L	L	L	L	L
L	X	X	X	X	X	L	L	L	L	L	L	L	L
X	H	X	X	X	X	L	L	L	L	L	L	L	L
H	L	L	L	L	L	H	L	L	L	L	L	L	L
H	L	L	L	L	H	L	H	L	L	L	L	L	L
H	L	L	L	H	L	L	L	H	L	L	L	L	L
H	L	L	L	H	H	L	L	L	H	L	L	L	L
H	L	L	H	L	L	L	L	L	L	H	L	L	L
H	L	L	H	L	H	L	L	L	L	L	H	L	L
H	L	L	H	H	L	L	L	L	L	L	L	H	L
H	L	L	H	H	H	L	L	L	L	L	L	L	H

H = High Voltage Level, L = Low Voltage Level, X = Don’t Care

Copyright © 2021 Texas Instruments Incorporated

8 Power Supply Recommendations

The power supply can be any voltage between the minimum and maximum supply voltage rating located in the *Recommended Operating Conditions*. Each V_{CC} terminal should have a good bypass capacitor to prevent power disturbance. A 0.1-µF capacitor is recommended for this device. It is acceptable to parallel multiple bypass caps to reject different frequencies of noise. The 0.1-µF and 1-µF capacitors are commonly used in parallel. The bypass capacitor should be installed as close to the power terminal as possible for best results.

9 Layout

9.1 Layout Guidelines

When using multiple-input and multiple-channel logic devices inputs must not ever be left floating. In many cases, functions or parts of functions of digital logic devices are unused; for example, when only two inputs of a triple-input AND gate are used or only 3 of the 4 buffer gates are used. Such unused input pins must not be left unconnected because the undefined voltages at the outside connections result in undefined operational states. All unused inputs of digital logic devices must be connected to a logic high or logic low voltage, as defined by the input voltage specifications, to prevent them from floating. The logic level that must be applied to any particular unused input depends on the function of the device. Generally, the inputs are tied to GND or V_{CC}, whichever makes more sense for the logic function or is more convenient.

Copyright © 2021 Texas Instruments Incorporated

10 Device and Documentation Support

TI offers an extensive line of development tools. Tools and software to evaluate the performance of the device, generate code, and develop solutions are listed below.

10.1 Documentation Support

10.1.1 Related Documentation

10.2 Receiving Notification of Documentation Updates

To receive notification of documentation updates, navigate to the device product folder on ti.com. Click on *Subscribe to updates* to register and receive a weekly digest of any product information that has changed. For change details, review the revision history included in any revised document.

10.3 Support Resources

TI E2E™ support forums are an engineer's go-to source for fast, verified answers and design help — straight from the experts. Search existing answers or ask your own question to get the quick design help you need.

Linked content is provided "AS IS" by the respective contributors. They do not constitute TI specifications and do not necessarily reflect TI's views; see TI's Terms of Use.

10.4 Trademarks

TI E2E™ is a trademark of Texas Instruments.
All trademarks are the property of their respective owners.

10.5 Electrostatic Discharge Caution

This integrated circuit can be damaged by ESD. Texas Instruments recommends that all integrated circuits be handled with appropriate precautions. Failure to observe proper handling and installation procedures can cause damage.

ESD damage can range from subtle performance degradation to complete device failure. Precision integrated circuits may be more susceptible to damage because very small parametric changes could cause the device not to meet its published specifications.

10.6 Glossary

TI Glossary	This glossary lists and explains terms, acronyms, and definitions.

11 Mechanical, Packaging, and Orderable Information

The following pages include mechanical, packaging, and orderable information. This information is the most current data available for the designated devices. This data is subject to change without notice and revision of this document. For browser-based versions of this data sheet, refer to the left-hand navigation.

Copyright © 2021 Texas Instruments Incorporated

PACKAGING INFORMATION

Orderable part number	Status (1)	Material type (2)	Package | Pins	Package qty | Carrier	RoHS (3)	Lead finish/ Ball material (4)	MSL rating/ Peak reflow (5)	Op temp (°C)	Part marking (6)
5962-8688401EA	Active	Production	CDIP (J) | 16	25 | TUBE	No	SNPB	N/A for Pkg Type	-55 to 125	5962-8688401EA CD54HC238F3A
CD54HC138F	Active	Production	CDIP (J) | 16	25 | TUBE	No	SNPB	N/A for Pkg Type	-55 to 125	CD54HC138F
CD54HC138F.A	Active	Production	CDIP (J) | 16	25 | TUBE	No	SNPB	N/A for Pkg Type	-55 to 125	CD54HC138F
CD54HC138F3A	Active	Production	CDIP (J) | 16	25 | TUBE	No	SNPB	N/A for Pkg Type	-55 to 125	8406201EA CD54HC138F3A
CD54HC138F3A.A	Active	Production	CDIP (J) | 16	25 | TUBE	No	SNPB	N/A for Pkg Type	-55 to 125	8406201EA CD54HC138F3A
CD54HC238F3A	Active	Production	CDIP (J) | 16	25 | TUBE	No	SNPB	N/A for Pkg Type	-55 to 125	5962-8688401EA CD54HC238F3A
CD54HC238F3A.A	Active	Production	CDIP (J) | 16	25 | TUBE	No	SNPB	N/A for Pkg Type	-55 to 125	5962-8688401EA CD54HC238F3A
CD54HCT138F	Active	Production	CDIP (J) | 16	25 | TUBE	No	SNPB	N/A for Pkg Type	-55 to 125	CD54HCT138F
CD54HCT138F.A	Active	Production	CDIP (J) | 16	25 | TUBE	No	SNPB	N/A for Pkg Type	-55 to 125	CD54HCT138F
CD54HCT138F3A	Active	Production	CDIP (J) | 16	25 | TUBE	No	SNPB	N/A for Pkg Type	-55 to 125	8550401EA CD54HCT138F3A
CD54HCT138F3A.A	Active	Production	CDIP (J) | 16	25 | TUBE	No	SNPB	N/A for Pkg Type	-55 to 125	8550401EA CD54HCT138F3A
CD54HCT238F3A	Active	Production	CDIP (J) | 16	25 | TUBE	No	SNPB	N/A for Pkg Type	-55 to 125	5962-8974501EA CD54HCT238F3A
CD54HCT238F3A.A	Active	Production	CDIP (J) | 16	25 | TUBE	No	SNPB	N/A for Pkg Type	-55 to 125	5962-8974501EA CD54HCT238F3A
CD74HC138E	Active	Production	PDIP (N) | 16	25 | TUBE	Yes	NIPDAU	N/A for Pkg Type	-55 to 125	CD74HC138E
CD74HC138E.A	Active	Production	PDIP (N) | 16	25 | TUBE	Yes	NIPDAU	N/A for Pkg Type	-55 to 125	CD74HC138E
CD74HC138M	Obsolete	Production	SOIC (D) | 16	-	-	Call TI	Call TI	-55 to 125	HC138M
CD74HC138M96	Active	Production	SOIC (D) | 16	2500 | LARGE T&R	Yes	NIPDAU | SN	Level-1-260C-UNLIM	-55 to 125	HC138M
CD74HC138M96.A	Active	Production	SOIC (D) | 16	2500 | LARGE T&R	Yes	NIPDAU	Level-1-260C-UNLIM	-55 to 125	HC138M
CD74HC138M96E4	Active	Production	null (null) |	2500 | LARGE T&R	-	Call TI	Call TI	-55 to 125	
CD74HC138M96G4	Active	Production	SOIC (D) | 16	2500 | LARGE T&R	Yes	NIPDAU	Level-1-260C-UNLIM	-55 to 125	HC138M
CD74HC138M96G4.A	Active	Production	SOIC (D) | 16	2500 | LARGE T&R	Yes	NIPDAU	Level-1-260C-UNLIM	-55 to 125	HC138M
CD74HC138MT	Obsolete	Production	SOIC (D) | 16	-	-	Call TI	Call TI	-55 to 125	HC138M

Orderable part number	Status (1)	Material type (2)	Package | Pins	Package qty | Carrier	RoHS (3)	Lead finish/ Ball material (4)	MSL rating/ Peak reflow (5)	Op temp (°C)	Part marking (6)
CD74HC238E	Active	Production	PDIP (N) | 16	25 | TUBE	Yes	NIPDAU	N/A for Pkg Type	-55 to 125	CD74HC238E
CD74HC238E.A	Active	Production	PDIP (N) | 16	25 | TUBE	Yes	NIPDAU	N/A for Pkg Type	-55 to 125	CD74HC238E
CD74HC238EE4	Active	Production	PDIP (N) | 16	25 | TUBE	Yes	NIPDAU	N/A for Pkg Type	-55 to 125	CD74HC238E
CD74HC238M	Obsolete	Production	SOIC (D) | 16	-	-	Call TI	Call TI	-55 to 125	HC238M
CD74HC238M96	Active	Production	SOIC (D) | 16	2500 | LARGE T&R	Yes	NIPDAU | SN	Level-1-260C-UNLIM	-55 to 125	HC238M
CD74HC238M96.A	Active	Production	SOIC (D) | 16	2500 | LARGE T&R	Yes	NIPDAU	Level-1-260C-UNLIM	-55 to 125	HC238M
CD74HC238M961G4	Active	Production	SOIC (D) | 16	2500 | LARGE T&R	Yes	NIPDAU	Level-1-260C-UNLIM	-55 to 125	HC238M
CD74HC238M961G4.A	Active	Production	SOIC (D) | 16	2500 | LARGE T&R	Yes	NIPDAU	Level-1-260C-UNLIM	-55 to 125	HC238M
CD74HC238MT	Obsolete	Production	SOIC (D) | 16	-	-	Call TI	Call TI	-55 to 125	HC238M
CD74HC238NSR	Active	Production	SOP (NS) | 16	2000 | LARGE T&R	Yes	NIPDAU	Level-1-260C-UNLIM	-55 to 125	HC238M
CD74HC238NSR.A	Active	Production	SOP (NS) | 16	2000 | LARGE T&R	Yes	NIPDAU	Level-1-260C-UNLIM	-55 to 125	HC238M
CD74HC238PW	Obsolete	Production	TSSOP (PW) | 16	-	-	Call TI	Call TI	-55 to 125	HJ238
CD74HC238PWR	Active	Production	TSSOP (PW) | 16	2000 | LARGE T&R	Yes	NIPDAU | SN	Level-1-260C-UNLIM	-55 to 125	HJ238
CD74HC238PWR.A	Active	Production	TSSOP (PW) | 16	2000 | LARGE T&R	Yes	NIPDAU	Level-1-260C-UNLIM	-55 to 125	HJ238
CD74HC238PWR1G4	Active	Production	TSSOP (PW) | 16	2000 | LARGE T&R	Yes	NIPDAU	Level-1-260C-UNLIM	-55 to 125	HJ238
CD74HC238PWT	Obsolete	Production	TSSOP (PW) | 16	-	-	Call TI	Call TI	-55 to 125	HJ238
CD74HCT138E	Active	Production	PDIP (N) | 16	25 | TUBE	Yes	NIPDAU	N/A for Pkg Type	-55 to 125	CD74HCT138E
CD74HCT138E.A	Active	Production	PDIP (N) | 16	25 | TUBE	Yes	NIPDAU	N/A for Pkg Type	-55 to 125	CD74HCT138E
CD74HCT138M	Obsolete	Production	SOIC (D) | 16	-	-	Call TI	Call TI	-55 to 125	HCT138M
CD74HCT138M96	Active	Production	SOIC (D) | 16	2500 | LARGE T&R	Yes	NIPDAU | SN	Level-1-260C-UNLIM	-55 to 125	HCT138M
CD74HCT138M96.A	Active	Production	SOIC (D) | 16	2500 | LARGE T&R	Yes	NIPDAU	Level-1-260C-UNLIM	-55 to 125	HCT138M
CD74HCT238E	Active	Production	PDIP (N) | 16	25 | TUBE	Yes	NIPDAU	N/A for Pkg Type	-55 to 125	CD74HCT238E
CD74HCT238E.A	Active	Production	PDIP (N) | 16	25 | TUBE	Yes	NIPDAU	N/A for Pkg Type	-55 to 125	CD74HCT238E
CD74HCT238M	Obsolete	Production	SOIC (D) | 16	-	-	Call TI	Call TI	-55 to 125	HCT238M
CD74HCT238M96	Active	Production	SOIC (D) | 16	2500 | LARGE T&R	Yes	NIPDAU | SN	Level-1-260C-UNLIM	-55 to 125	HCT238M
CD74HCT238M96.A	Active	Production	SOIC (D) | 16	2500 | LARGE T&R	Yes	NIPDAU	Level-1-260C-UNLIM	-55 to 125	HCT238M
CD74HCT238PW	Obsolete	Production	TSSOP (PW) | 16	-	-	Call TI	Call TI	-55 to 125	HK238
CD74HCT238PWR	Active	Production	TSSOP (PW) | 16	2000 | LARGE T&R	Yes	NIPDAU | SN	Level-1-260C-UNLIM	-55 to 125	HK238
CD74HCT238PWR.A	Active	Production	TSSOP (PW) | 16	2000 | LARGE T&R	Yes	NIPDAU	Level-1-260C-UNLIM	-55 to 125	HK238

(1) **Status:** For more details on status, see our product life cycle.

(2) **Material type:** When designated, preproduction parts are prototypes/experimental devices, and are not yet approved or released for full production. Testing and final process, including without limitation quality assurance, reliability performance testing, and/or process qualification, may not yet be complete, and this item is subject to further changes or possible discontinuation. If available for ordering, purchases will be subject to an additional waiver at checkout, and are intended for early internal evaluation purposes only. These items are sold without warranties of any kind.

(3) **RoHS values:** Yes, No, RoHS Exempt. See the TI RoHS Statement for additional information and value definition.

(4) **Lead finish/Ball material:** Parts may have multiple material finish options. Finish options are separated by a vertical ruled line. Lead finish/Ball material values may wrap to two lines if the finish value exceeds the maximum column width.

(5) **MSL rating/Peak reflow:** The moisture sensitivity level ratings and peak solder (reflow) temperatures. In the event that a part has multiple moisture sensitivity ratings, only the lowest level per JEDEC standards is shown. Refer to the shipping label for the actual reflow temperature that will be used to mount the part to the printed circuit board.

(6) **Part marking:** There may be an additional marking, which relates to the logo, the lot trace code information, or the environmental category of the part.

Multiple part markings will be inside parentheses. Only one part marking contained in parentheses and separated by a "~" will appear on a part. If a line is indented then it is a continuation of the previous line and the two combined represent the entire part marking for that device.

Important Information and Disclaimer: The information provided on this page represents TI's knowledge and belief as of the date that it is provided. TI bases its knowledge and belief on information provided by third parties, and makes no representation or warranty as to the accuracy of such information. Efforts are underway to better integrate information from third parties. TI has taken and continues to take reasonable steps to provide representative and accurate information but may not have conducted destructive testing or chemical analysis on incoming materials and chemicals. TI and TI suppliers consider certain information to be proprietary, and thus CAS numbers and other limited information may not be available for release.

In no event shall TI's liability arising out of such information exceed the total purchase price of the TI part(s) at issue in this document sold by TI to Customer on an annual basis.

OTHER QUALIFIED VERSIONS OF CD54HC138, CD54HC238, CD54HCT138, CD54HCT238, CD74HC138, CD74HC238, CD74HCT138, CD74HCT238 :

- Catalog : CD74HC138, CD74HC238, CD74HCT138, CD74HCT238
- Automotive : CD74HC138-Q1, CD74HC138-Q1
- Military : CD54HC138, CD54HC238, CD54HCT138, CD54HCT238

NOTE: Qualified Version Definitions:

- Catalog - TI's standard catalog product

- Automotive - Q100 devices qualified for high-reliability automotive applications targeting zero defects
- Military - QML certified for Military and Defense Applications

TAPE AND REEL INFORMATION

REEL DIMENSIONS

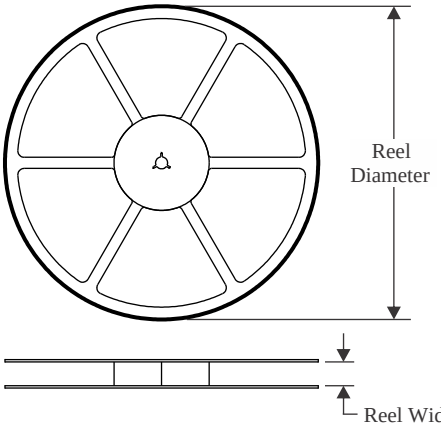

TAPE DIMENSIONS

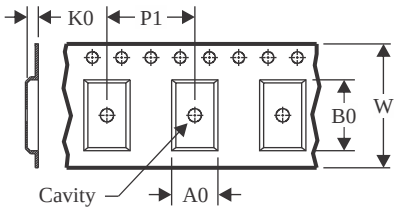

A0	Dimension designed to accommodate the component width
B0	Dimension designed to accommodate the component length
K0	Dimension designed to accommodate the component thickness
W	Overall width of the carrier tape
P1	Pitch between successive cavity centers

QUADRANT ASSIGNMENTS FOR PIN 1 ORIENTATION IN TAPE

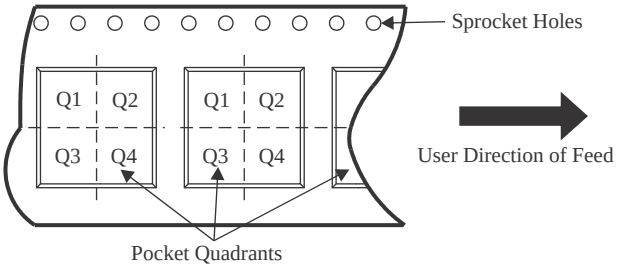

*All dimensions are nominal

Device	Package Type	Package Drawing	Pins	SPQ	Reel Diameter (mm)	Reel Width W1 (mm)	A0 (mm)	B0 (mm)	K0 (mm)	P1 (mm)	W (mm)	Pin1 Quadrant
CD74HC138M96	SOIC	D	16	2500	330.0	16.4	6.5	10.3	2.1	8.0	16.0	Q1
CD74HC138M96G4	SOIC	D	16	2500	330.0	16.4	6.5	10.3	2.1	8.0	16.0	Q1
CD74HC238M96	SOIC	D	16	2500	330.0	16.4	6.5	10.3	2.1	8.0	16.0	Q1
CD74HC238M96	SOIC	D	16	2500	330.0	16.4	6.5	10.3	2.1	8.0	16.0	Q1
CD74HC238M961G4	SOIC	D	16	2500	330.0	16.4	6.5	10.3	2.1	8.0	16.0	Q1
CD74HC238NSR	SOP	NS	16	2000	330.0	16.4	8.1	10.4	2.5	12.0	16.0	Q1
CD74HC238PWR	TSSOP	PW	16	2000	330.0	12.4	6.9	5.6	1.6	8.0	12.0	Q1
CD74HC238PWR	TSSOP	PW	16	2000	330.0	12.4	6.9	5.3	1.6	8.0	12.0	Q1
CD74HC238PWR	TSSOP	PW	16	2000	330.0	12.4	6.9	5.6	1.6	8.0	12.0	Q1
CD74HC238PWR1G4	TSSOP	PW	16	2000	330.0	12.4	6.9	5.6	1.6	8.0	12.0	Q1
CD74HCT138M96	SOIC	D	16	2500	330.0	16.4	6.5	10.3	2.1	8.0	16.0	Q1
CD74HCT238M96	SOIC	D	16	2500	330.0	16.4	6.5	10.3	2.1	8.0	16.0	Q1
CD74HCT238PWR	TSSOP	PW	16	2000	330.0	12.4	6.9	5.6	1.6	8.0	12.0	Q1

TAPE AND REEL BOX DIMENSIONS

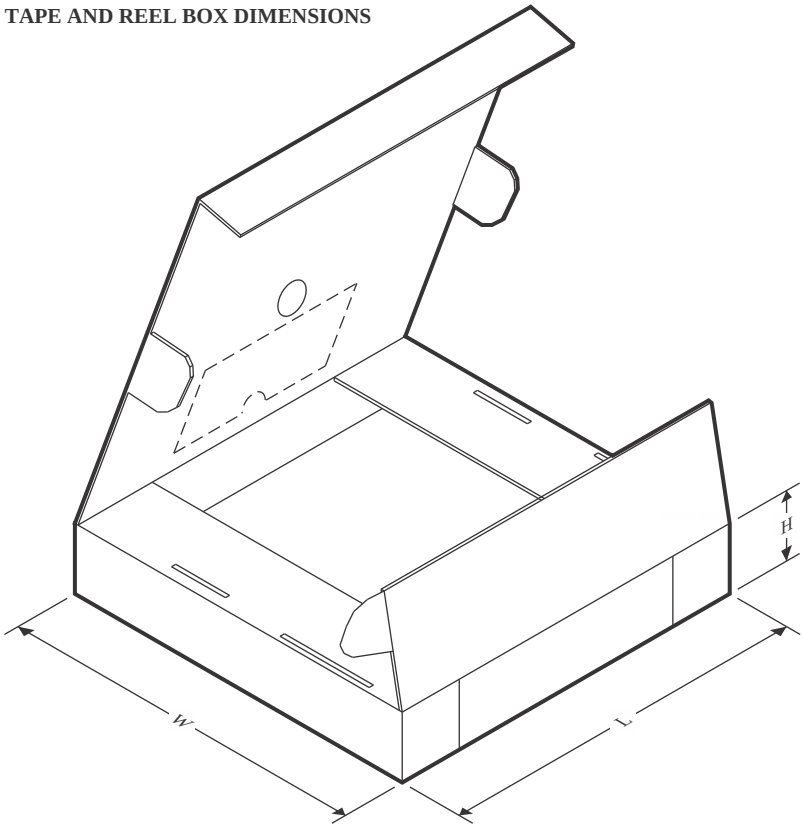

*All dimensions are nominal

Device	Package Type	Package Drawing	Pins	SPQ	Length (mm)	Width (mm)	Height (mm)
CD74HC138M96	SOIC	D	16	2500	353.0	353.0	32.0
CD74HC138M96G4	SOIC	D	16	2500	353.0	353.0	32.0
CD74HC238M96	SOIC	D	16	2500	340.5	336.1	32.0
CD74HC238M96	SOIC	D	16	2500	340.5	336.1	32.0
CD74HC238M961G4	SOIC	D	16	2500	353.0	353.0	32.0
CD74HC238NSR	SOP	NS	16	2000	353.0	353.0	32.0
CD74HC238PWR	TSSOP	PW	16	2000	353.0	353.0	32.0
CD74HC238PWR	TSSOP	PW	16	2000	367.0	367.0	35.0
CD74HC238PWR	TSSOP	PW	16	2000	356.0	356.0	35.0
CD74HC238PWR1G4	TSSOP	PW	16	2000	356.0	356.0	35.0
CD74HCT138M96	SOIC	D	16	2500	353.0	353.0	32.0
CD74HCT238M96	SOIC	D	16	2500	353.0	353.0	32.0
CD74HCT238PWR	TSSOP	PW	16	2000	356.0	356.0	35.0

TUBE

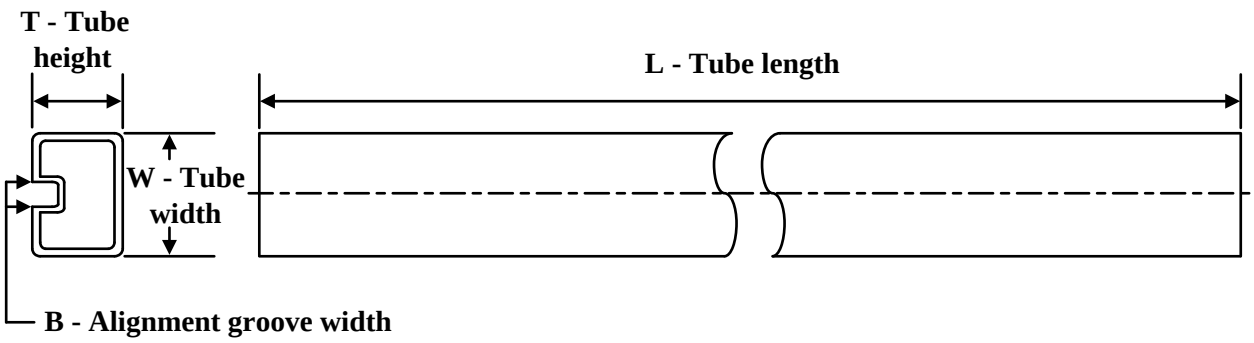

*All dimensions are nominal

Device	Package Name	Package Type	Pins	SPQ	L (mm)	W (mm)	T (µm)	B (mm)
CD74HC138E	N	PDIP	16	25	506	13.97	11230	4.32
CD74HC138E	N	PDIP	16	25	506	13.97	11230	4.32
CD74HC138E.A	N	PDIP	16	25	506	13.97	11230	4.32
CD74HC138E.A	N	PDIP	16	25	506	13.97	11230	4.32
CD74HC238E	N	PDIP	16	25	506	13.97	11230	4.32
CD74HC238E	N	PDIP	16	25	506	13.97	11230	4.32
CD74HC238E.A	N	PDIP	16	25	506	13.97	11230	4.32
CD74HC238E.A	N	PDIP	16	25	506	13.97	11230	4.32
CD74HC238EE4	N	PDIP	16	25	506	13.97	11230	4.32
CD74HC238EE4	N	PDIP	16	25	506	13.97	11230	4.32
CD74HCT138E	N	PDIP	16	25	506	13.97	11230	4.32
CD74HCT138E	N	PDIP	16	25	506	13.97	11230	4.32
CD74HCT138E.A	N	PDIP	16	25	506	13.97	11230	4.32
CD74HCT138E.A	N	PDIP	16	25	506	13.97	11230	4.32
CD74HCT238E	N	PDIP	16	25	506	13.97	11230	4.32
CD74HCT238E	N	PDIP	16	25	506	13.97	11230	4.32
CD74HCT238E.A	N	PDIP	16	25	506	13.97	11230	4.32
CD74HCT238E.A	N	PDIP	16	25	506	13.97	11230	4.32

J (R–GDIP–T**) CERAMIC DUAL IN–LINE PACKAGE

14 LEADS SHOWN

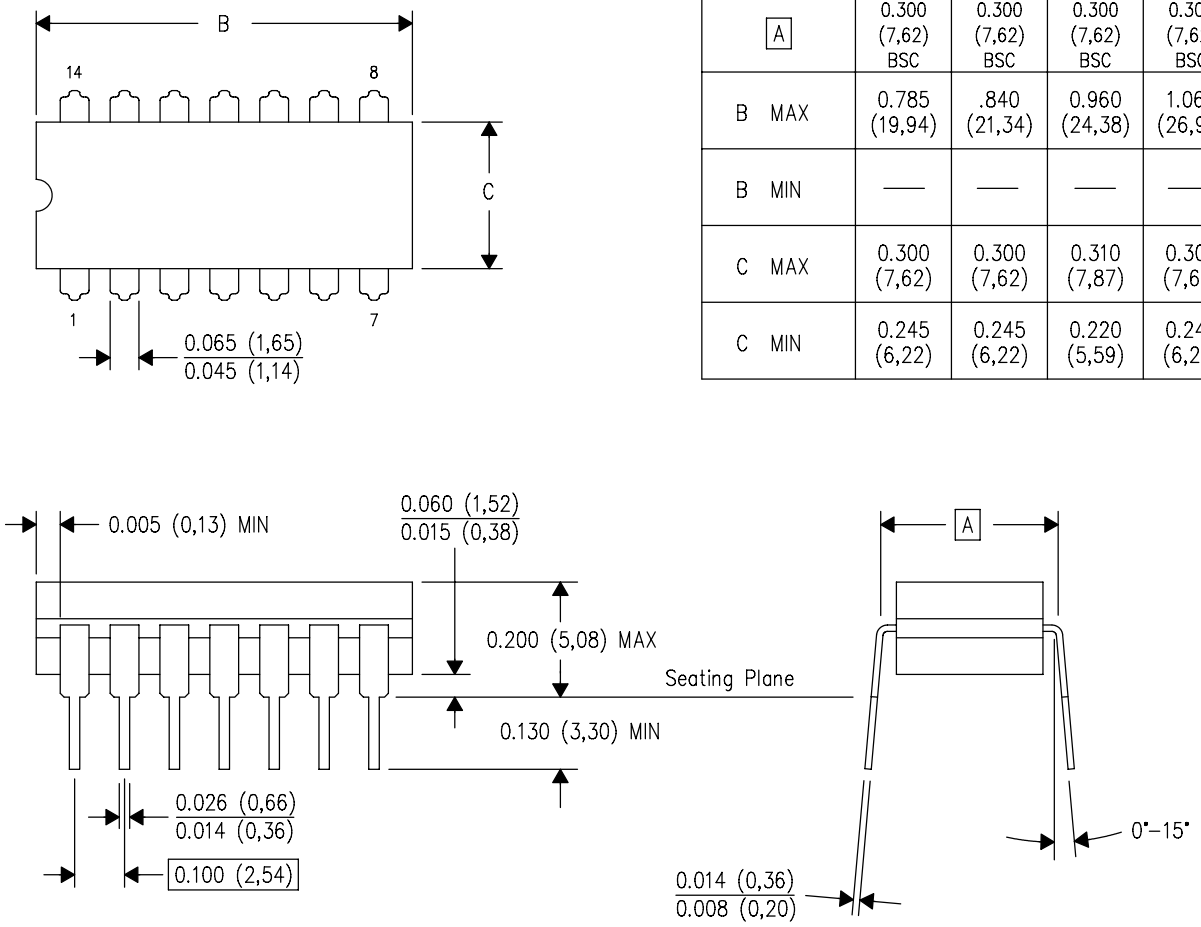

DIM \ PINS **	14	16	18	20
A	0.300 (7,62) BSC	0.300 (7,62) BSC	0.300 (7,62) BSC	0.300 (7,62) BSC
B MAX	0.785 (19,94)	.840 (21,34)	0.960 (24,38)	1.060 (26,92)
B MIN	—	—	—	—
C MAX	0.300 (7,62)	0.300 (7,62)	0.310 (7,87)	0.300 (7,62)
C MIN	0.245 (6,22)	0.245 (6,22)	0.220 (5,59)	0.245 (6,22)

4040083/F 03/03

NOTES:
- A. All linear dimensions are in inches (millimeters).
- B. This drawing is subject to change without notice.
- C. This package is hermetically sealed with a ceramic lid using glass frit.
- D. Index point is provided on cap for terminal identification only on press ceramic glass frit seal only.
- E. Falls within MIL STD 1835 GDIP1–T14, GDIP1–T16, GDIP1–T18 and GDIP1–T20.

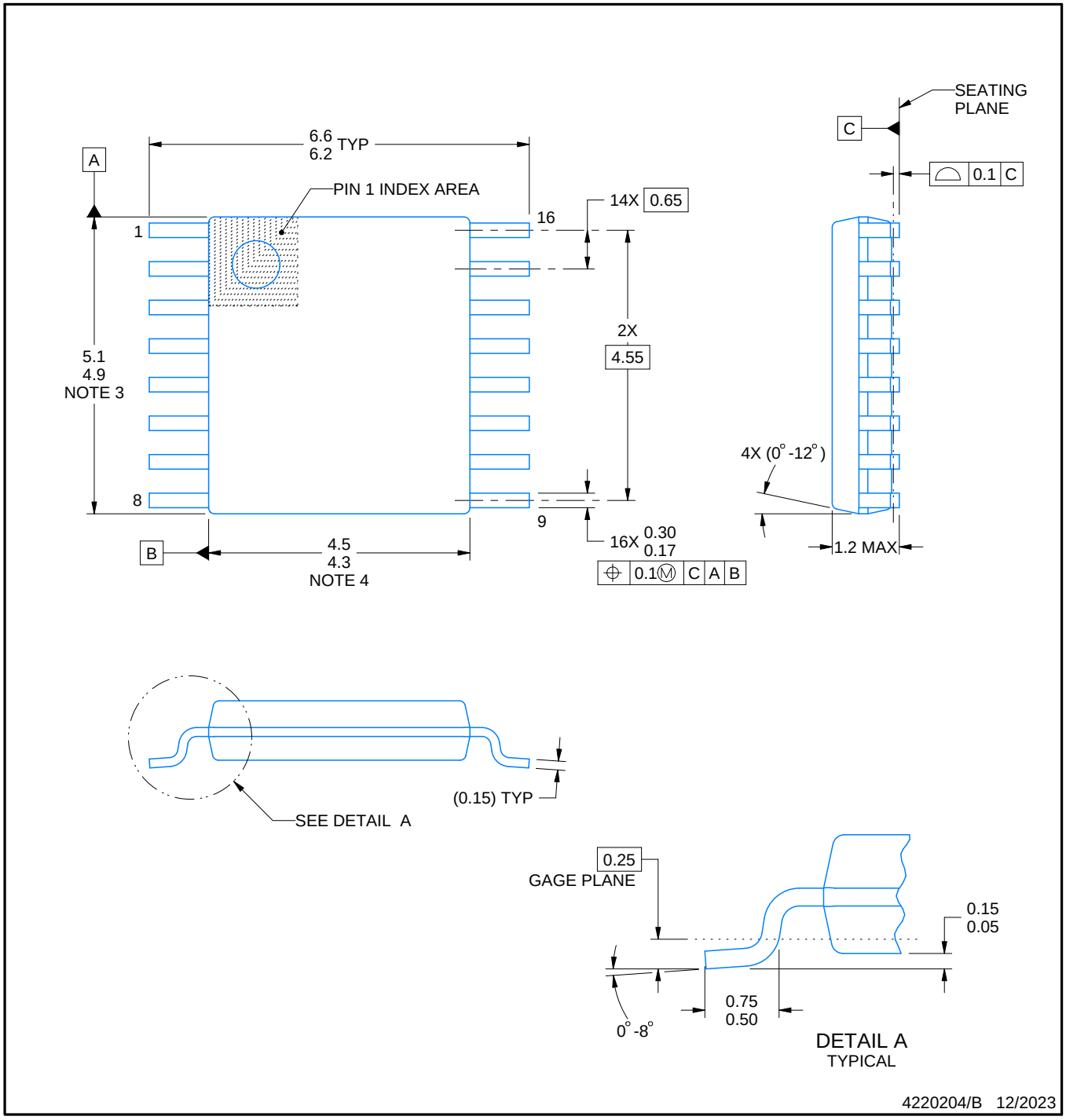

NOTES:

1. All linear dimensions are in millimeters. Any dimensions in parenthesis are for reference only. Dimensioning and tolerancing per ASME Y14.5M.
2. This drawing is subject to change without notice.
3. This dimension does not include mold flash, protrusions, or gate burrs. Mold flash, protrusions, or gate burrs shall not exceed 0.15 mm per side.
4. This dimension does not include interlead flash. Interlead flash shall not exceed 0.25 mm per side.
5. Reference JEDEC registration MO-153.

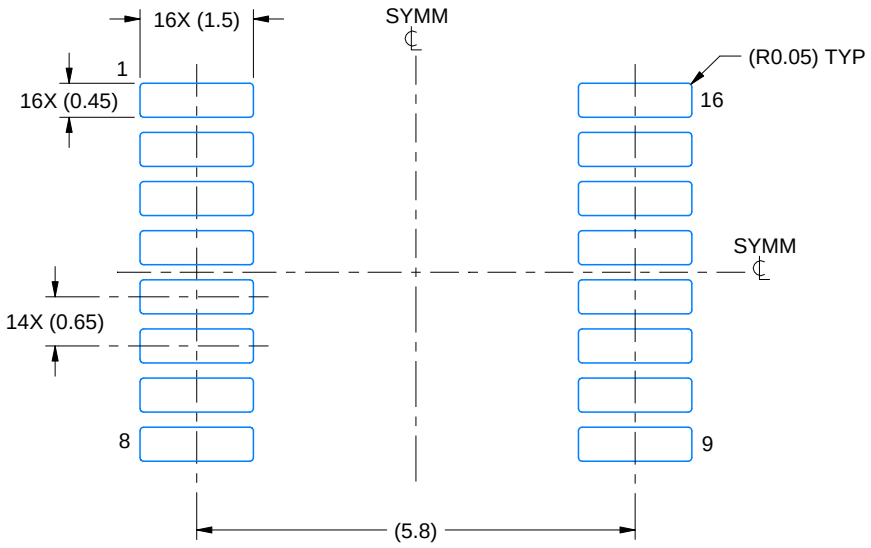

LAND PATTERN EXAMPLE
EXPOSED METAL SHOWN
SCALE: 10X

NON-SOLDER MASK DEFINED (PREFERRED)

SOLDER MASK DEFINED

SOLDER MASK DETAILS

4220204/B 12/2023

NOTES: (continued)

6. Publication IPC-7351 may have alternate designs.
7. Solder mask tolerances between and around signal pads can vary based on board fabrication site.

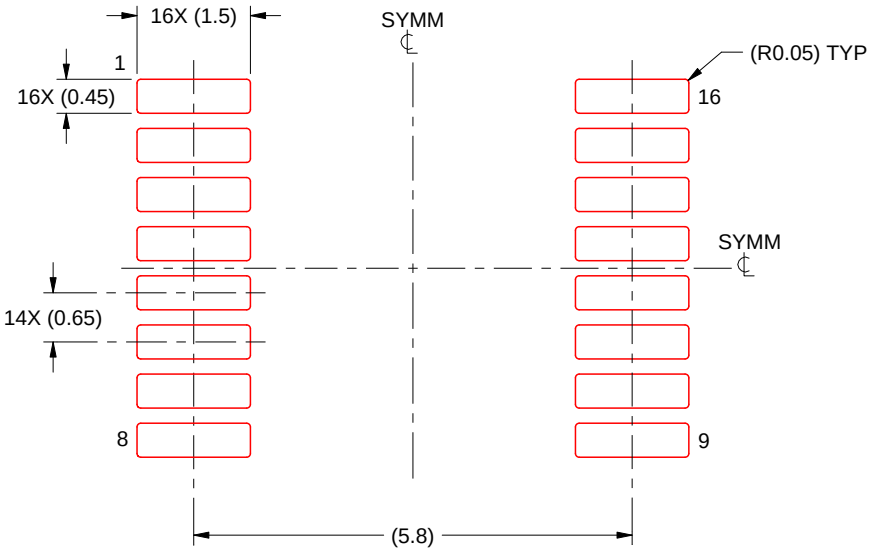

SOLDER PASTE EXAMPLE
BASED ON 0.125 mm THICK STENCIL
SCALE: 10X

4220204/B 12/2023

NOTES: (continued)

8. Laser cutting apertures with trapezoidal walls and rounded corners may offer better paste release. IPC-7525 may have alternate design recommendations.
9. Board assembly site may have different recommendations for stencil design.

N (R–PDIP–T**) PLASTIC DUAL–IN–LINE PACKAGE

16 PINS SHOWN

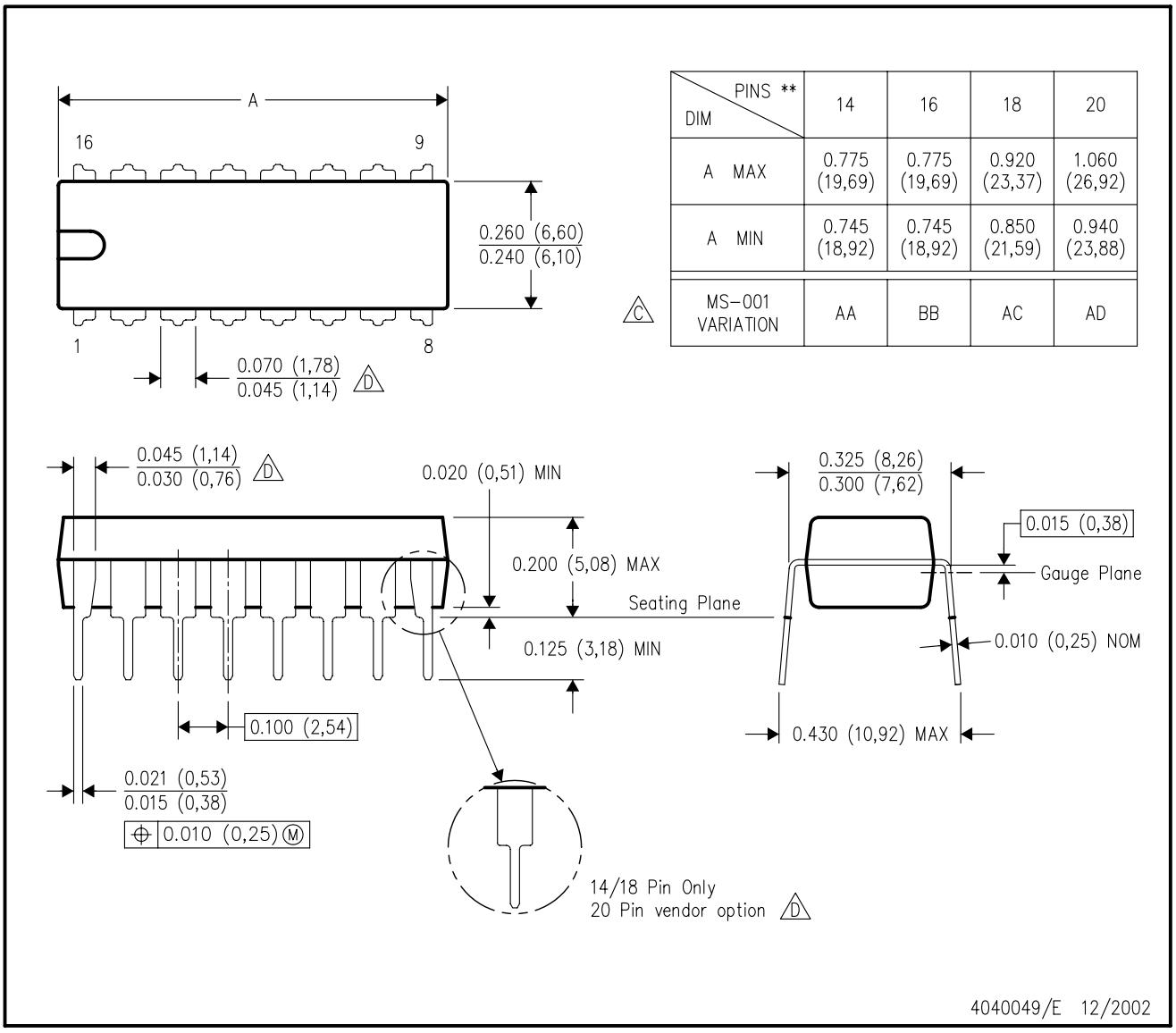

DIM \ PINS **	14	16	18	20
A MAX	0.775 (19,69)	0.775 (19,69)	0.920 (23,37)	1.060 (26,92)
A MIN	0.745 (18,92)	0.745 (18,92)	0.850 (21,59)	0.940 (23,88)
MS–001 VARIATION (C)	AA	BB	AC	AD

NOTES:
A. All linear dimensions are in inches (millimeters).
B. This drawing is subject to change without notice.
C. Falls within JEDEC MS–001, except 18 and 20 pin minimum body length (Dim A).
D. The 20 pin end lead shoulder width is a vendor option, either half or full width.

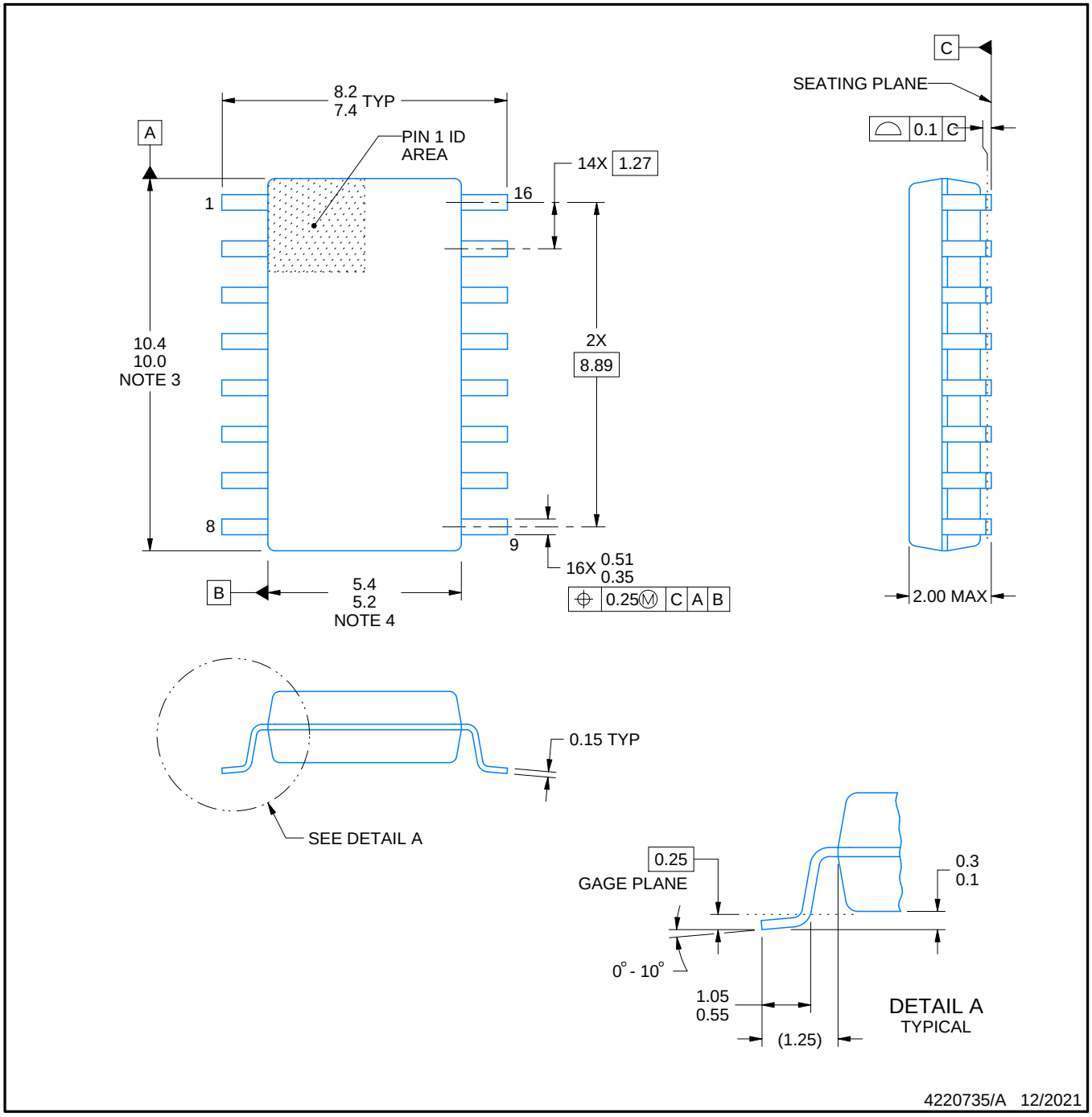

NOTES:

1. All linear dimensions are in millimeters. Dimensions in parenthesis are for reference only. Dimensioning and tolerancing per ASME Y14.5M.
2. This drawing is subject to change without notice.
3. This dimension does not include mold flash, protrusions, or gate burrs. Mold flash, protrusions, or gate burrs shall not exceed 0.15 mm, per side.
4. This dimension does not include interlead flash. Interlead flash shall not exceed 0.25 mm, per side.

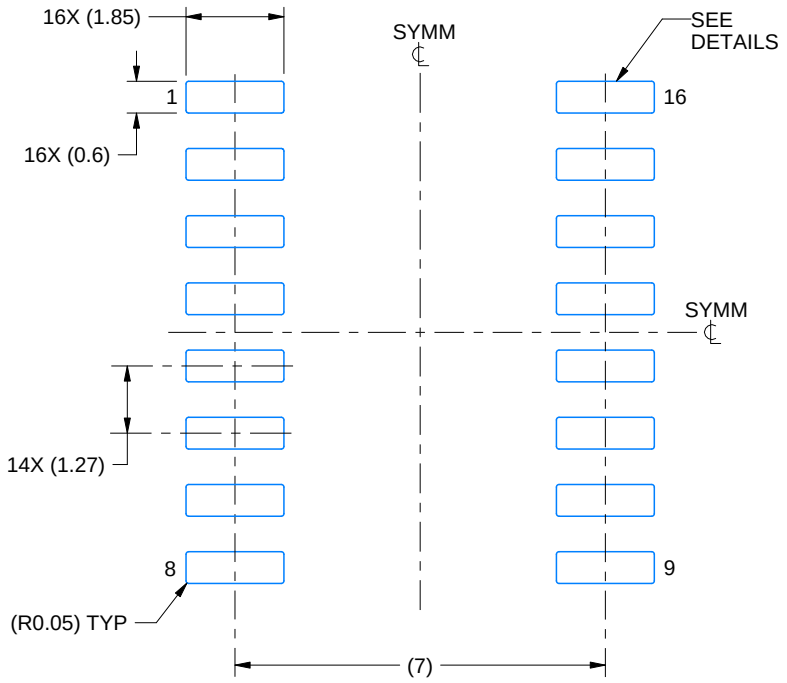

LAND PATTERN EXAMPLE
SCALE:7X

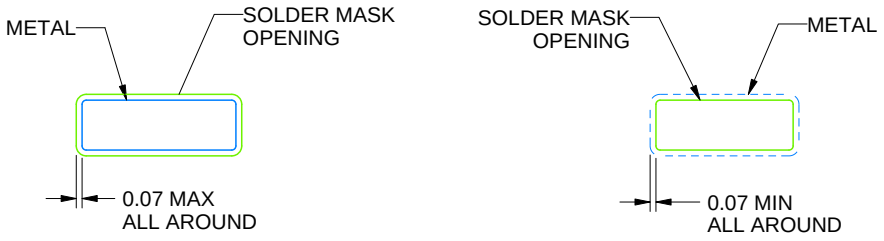

NON SOLDER MASK DEFINED

SOLDER MASK DEFINED

SOLDER MASK DETAILS

4220735/A 12/2021

NOTES: (continued)

5. Publication IPC-7351 may have alternate designs.
6. Solder mask tolerances between and around signal pads can vary based on board fabrication site.

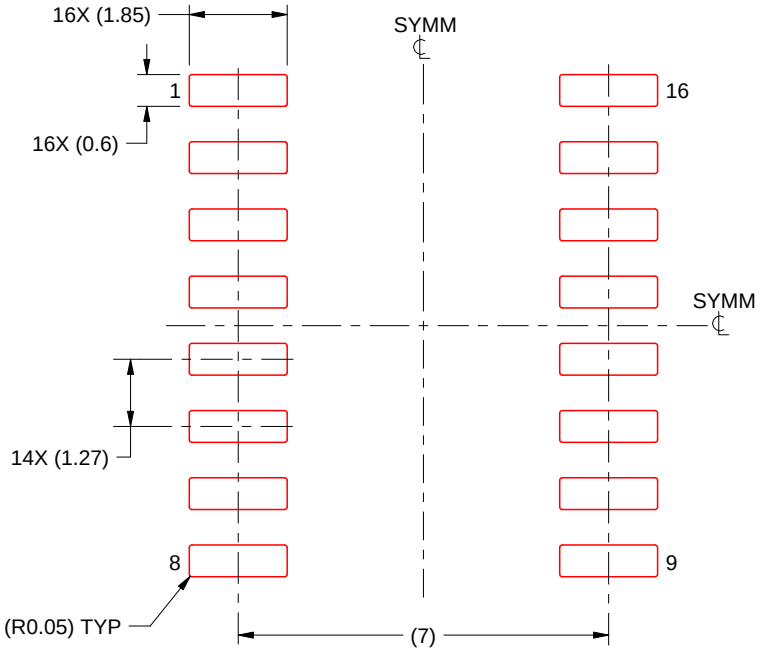

SOLDER PASTE EXAMPLE
BASED ON 0.125 mm THICK STENCIL
SCALE:7X

4220735/A 12/2021

NOTES: (continued)

7. Laser cutting apertures with trapezoidal walls and rounded corners may offer better paste release. IPC-7525 may have alternate design recommendations.
8. Board assembly site may have different recommendations for stencil design.

D (R–PDSO–G16) PLASTIC SMALL OUTLINE

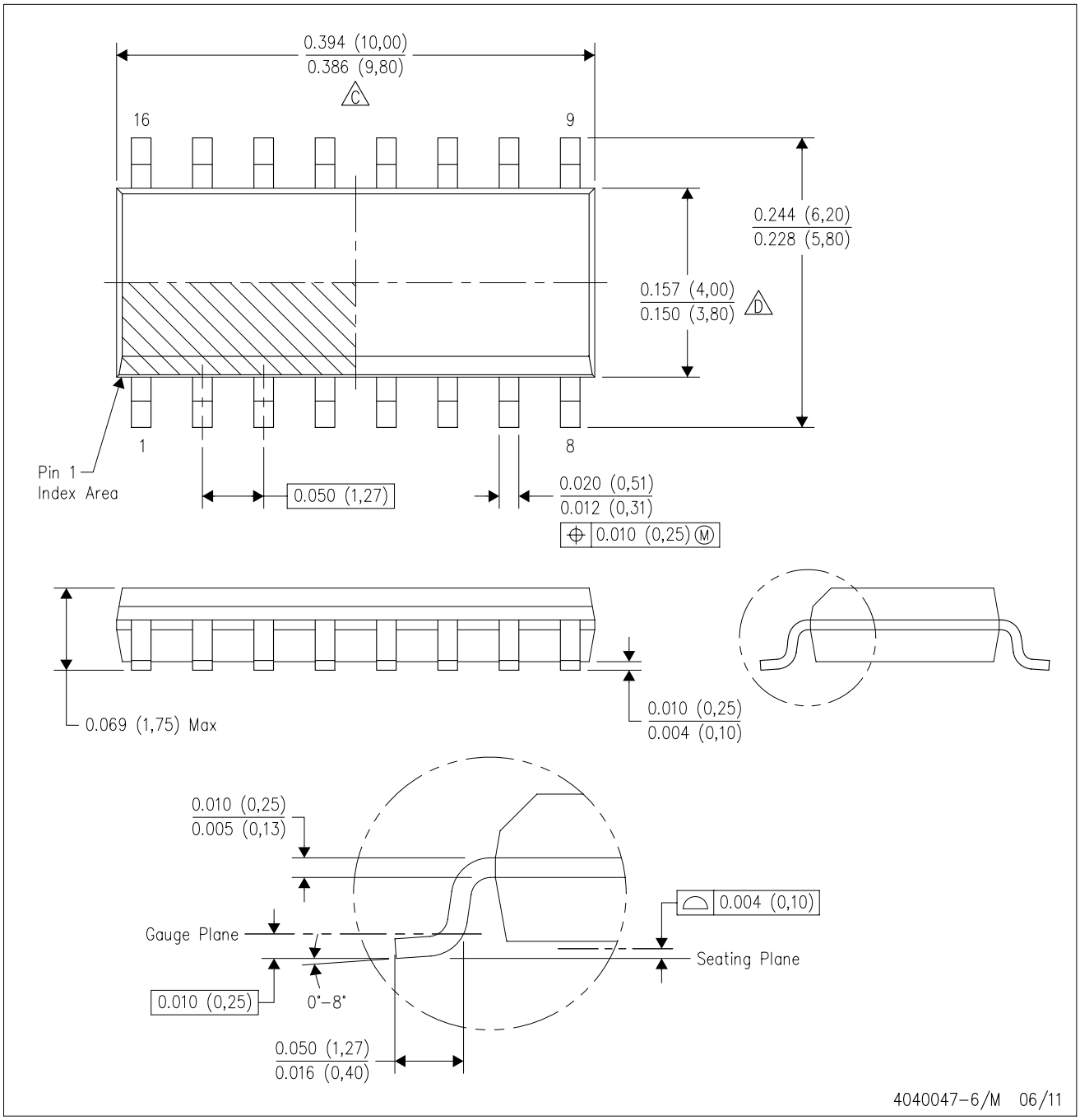

NOTES:
A. All linear dimensions are in inches (millimeters).
B. This drawing is subject to change without notice.
C. Body length does not include mold flash, protrusions, or gate burrs. Mold flash, protrusions, or gate burrs shall not exceed 0.006 (0,15) each side.
D. Body width does not include interlead flash. Interlead flash shall not exceed 0.017 (0,43) each side.
E. Reference JEDEC MS–012 variation AC.

IMPORTANT NOTICE AND DISCLAIMER

TI PROVIDES TECHNICAL AND RELIABILITY DATA (INCLUDING DATASHEETS), DESIGN RESOURCES (INCLUDING REFERENCE DESIGNS), APPLICATION OR OTHER DESIGN ADVICE, WEB TOOLS, SAFETY INFORMATION, AND OTHER RESOURCES “AS IS” AND WITH ALL FAULTS, AND DISCLAIMS ALL WARRANTIES, EXPRESS AND IMPLIED, INCLUDING WITHOUT LIMITATION ANY IMPLIED WARRANTIES OF MERCHANTABILITY, FITNESS FOR A PARTICULAR PURPOSE OR NON-INFRINGEMENT OF THIRD PARTY INTELLECTUAL PROPERTY RIGHTS.

These resources are intended for skilled developers designing with TI products. You are solely responsible for (1) selecting the appropriate TI products for your application, (2) designing, validating and testing your application, and (3) ensuring your application meets applicable standards, and any other safety, security, regulatory or other requirements.

These resources are subject to change without notice. TI grants you permission to use these resources only for development of an application that uses the TI products described in the resource. Other reproduction and display of these resources is prohibited. No license is granted to any other TI intellectual property right or to any third party intellectual property right. TI disclaims responsibility for, and you fully indemnify TI and its representatives against any claims, damages, costs, losses, and liabilities arising out of your use of these resources.

TI’s products are provided subject to TI’s Terms of Sale, TI’s General Quality Guidelines, or other applicable terms available either on ti.com or provided in conjunction with such TI products. TI’s provision of these resources does not expand or otherwise alter TI’s applicable warranties or warranty disclaimers for TI products. Unless TI explicitly designates a product as custom or customer-specified, TI products are standard, catalog, general purpose devices.

TI objects to and rejects any additional or different terms you may propose.

Copyright © 2026, Texas Instruments Incorporated

Last updated 10/2025