Data sheet acquired from Harris Semiconductor
SCHS146F

March 1998 - Revised October 2003

CD74HC137, CD74HCT137, CD54HC237, CD74HC237, CD74HCT237

High-Speed CMOS Logic, 3- to 8-Line Decoder/Demultiplexer with Address Latches

Features

- **Select One of Eight Data Outputs**
  - **Active Low for CD74HC137 and CD74HCT137**
  - **Active High for 'HC237 and CD74HCT237**
- **I/O Port or Memory Selector**
- **Two Enable Inputs to Simplify Cascading**
- **Typical Propagation Delay of 13ns at V_{CC} = 5V, 15pF, T_A = 25°C (CD74HC237)**
- **Fanout (Over Temperature Range)**
  - **Standard Outputs . . . . . 10 LSTTL Loads**
  - **Bus Driver Outputs . . . . . 15 LSTTL Loads**
- **Wide Operating Temperature Range . . . -55°C to 125°C**
- **Balanced Propagation Delay and Transition Times**
- **Significant Power Reduction Compared to LSTTL Logic ICs**
- **HC Types**
  - **2V to 6V Operation**
  - **High Noise Immunity: N_{IL} = 30%, N_{IH} = 30%, of V_{CC} at V_{CC} = 5V**
- **HCT Types**
  - **4.5V to 5.5V Operation**
  - **Direct LSTTL Input Logic Compatibility, V_{IL}= 0.8V (Max), V_{IH} = 2V (Min)**
  - **CMOS Input Compatibility, $I_I \leq 1\infty A$ at V_{OL}, V_{OH}**

Description

The CD74HC137, CD74HCT137, 'HC237, and CD74HCT237 are high speed silicon gate CMOS decoders well suited to memory address decoding or data routing applications. Both circuits feature low power consumption usually associated with CMOS circuitry, yet have speeds comparable to low power Schottky TTL logic.

Both circuits have three binary select inputs (A0, A1 and A2) that can be latched by an active High Latch Enable (LE) signal to isolate the outputs from select-input changes. A "Low" LE makes the output transparent to the input and the circuit functions as a one-of-eight decoder. Two Output Enable inputs ($\overline{OE}_1$ and OE_0) are provided to simplify cascading and to facilitate demultiplexing. The demultiplexing function is accomplished by using the A_0, A_1, A_2 inputs to select the desired output and using one of the other Output Enable inputs as the data input while holding the other Output Enable input in its active state. In the CD74HC137 and CD74HCT137 the selected output is a "Low"; in the 'HC237 and CD74HCT237 the selected output is a "High".

Ordering Information

PART NUMBER	TEMP. RANGE (°C)	PACKAGE
CD54HC237F3A	-55 to 125	16 Ld CERDIP
CD74HC137E	-55 to 125	16 Ld PDIP
CD74HC137PW	-55 to 125	16 Ld TSSOP
CD74HC137PWR	-55 to 125	16 Ld TSSOP
CD74HC137PWT	-55 to 125	16 Ld TSSOP
CD74HC237E	-55 to 125	16 Ld PDIP
CD74HC237M	-55 to 125	16 Ld SOIC
CD74HC237MT	-55 to 125	16 Ld SOIC
CD74HC237M96	-55 to 125	16 Ld SOIC
CD74HC237NSR	-55 to 125	16 Ld SOP
CD74HC237PW	-55 to 125	16 Ld TSSOP
CD74HC237PWR	-55 to 125	16 Ld TSSOP
CD74HC237PWT	-55 to 125	16 Ld TSSOP
CD74HCT137E	-55 to 125	16 Ld PDIP
CD74HCT137MT	-55 to 125	16 Ld SOIC
CD74HCT137M96	-55 to 125	16 Ld SOIC
CD74HCT237E	-55 to 125	16 Ld PDIP

NOTE: When ordering, use the entire part number. The suffixes 96 and R denote tape and reel. The suffix T denotes a small-quantity reel of 250.

CAUTION: These devices are sensitive to electrostatic discharge. Users should follow proper IC Handling Procedures.

Copyright © 2003, Texas Instruments Incorporated

Pinout

CD54HC237 (CERDIP)
CD74HC137 (PDIP, TSSOP)
CD74HCT137 (PDIP, SOIC)
CD74HC237 (PDIP, SOIC, SOP, TSSOP)
CD74HCT237 (PDIP)
TOP VIEW

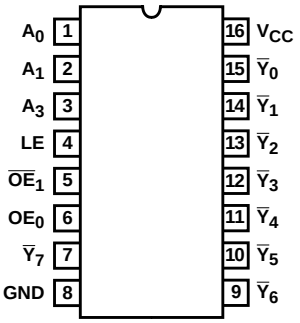

Functional Diagram

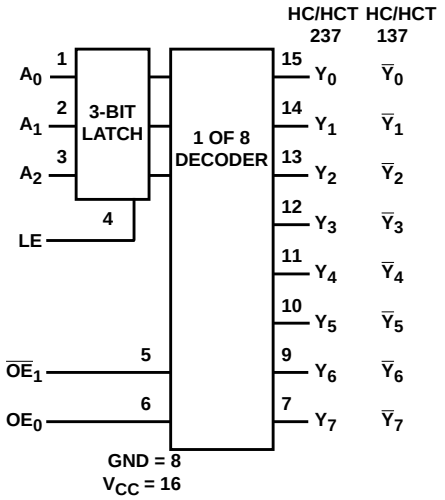

'HC137, 'HCT137 TRUTH TABLE

INPUTS						OUTPUTS							
LE	OE_0	$\overline{OE}_1$	A_2	A_1	A_0	$\overline{Y}_0$	$\overline{Y}_1$	$\overline{Y}_2$	$\overline{Y}_3$	$\overline{Y}_4$	$\overline{Y}_5$	$\overline{Y}_6$	$\overline{Y}_7$
X	X	H	X	X	X	H	H	H	H	H	H	H	H
X	L	X	X	X	X	H	H	H	H	H	H	H	H
L	H	L	L	L	L	L	H	H	H	H	H	H	H
L	H	L	L	L	H	H	L	H	H	H	H	H	H
L	H	L	L	H	L	H	H	L	H	H	H	H	H
L	H	L	L	H	H	H	H	H	L	H	H	H	H
L	H	L	H	L	L	H	H	H	H	L	H	H	H
L	H	L	H	L	H	H	H	H	H	H	L	H	H
L	H	L	H	H	L	H	H	H	H	H	H	L	H
L	H	L	H	H	H	H	H	H	H	H	H	H	L
H	H	L	X	X	X	Depends upon the address previously applied while LE was at a logic low.							

H = High Voltage Level, L = Low Voltage Level, X = Don't Care

'HC237, 'HCT237 TRUTH TABLE

INPUTS						OUTPUTS							
LE	OE_0	$\overline{OE}_1$	A_2	A_1	A_0	Y_0	Y_1	Y_2	Y_3	Y_4	Y_5	Y_6	Y_7
X	X	H	X	X	X	L	L	L	L	L	L	L	L
X	L	X	X	X	X	L	L	L	L	L	L	L	L
L	H	L	L	L	L	H	L	L	L	L	L	L	L
L	H	L	L	L	H	L	H	L	L	L	L	L	L
L	H	L	L	H	L	L	L	H	L	L	L	L	L
L	H	L	L	H	H	L	L	L	H	L	L	L	L
L	H	L	H	L	L	L	L	L	L	H	L	L	L
L	H	L	H	L	H	L	L	L	L	L	H	L	L
L	H	L	H	H	L	L	L	L	L	L	L	H	L
L	H	L	H	H	H	L	L	L	L	L	L	L	H
H	H	L	X	X	X	Depends upon the address previously applied while LE was at a logic low.							

H = High Voltage Level, L = Low Voltage Level, X = Don't Care

Functional Block Diagram

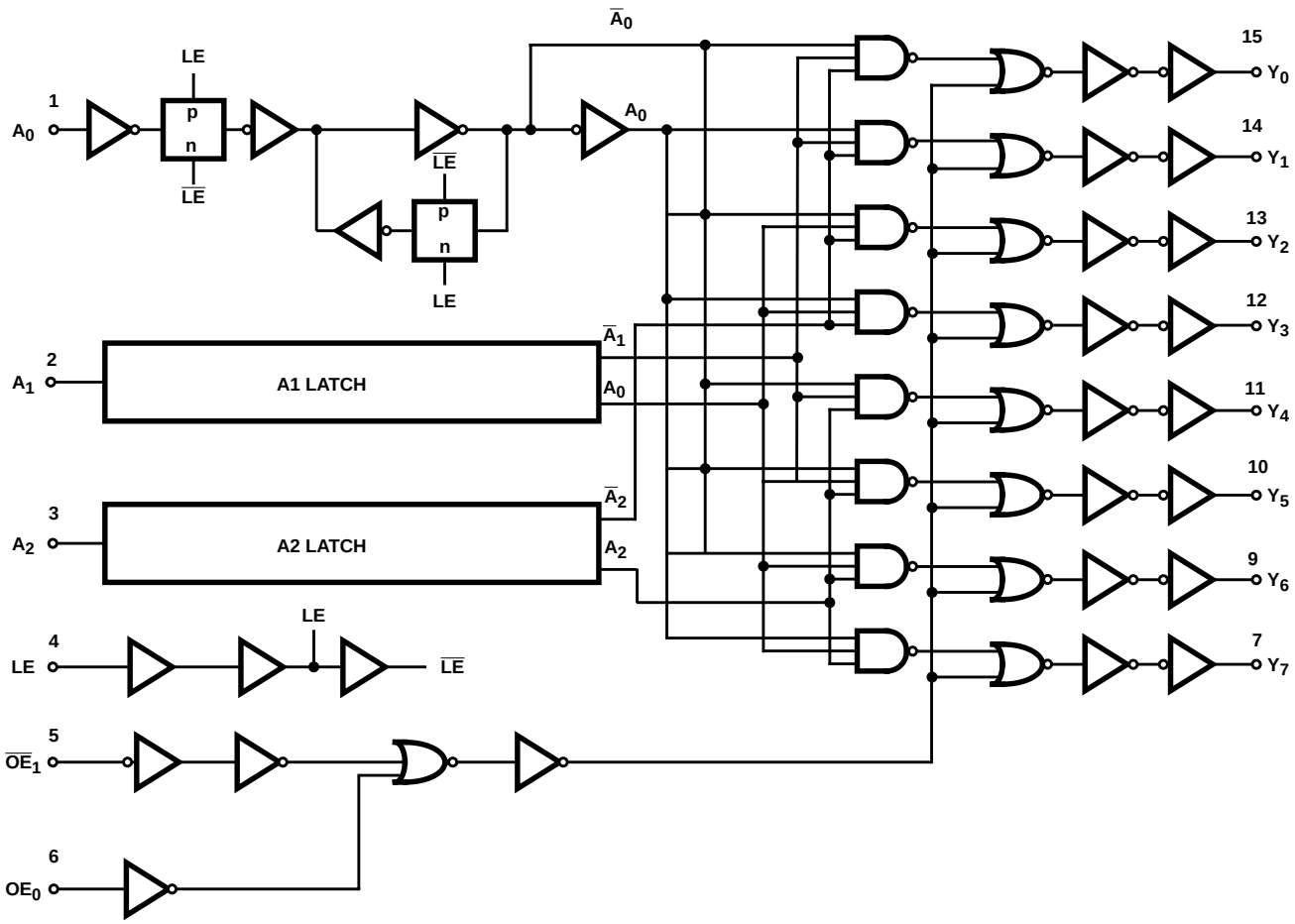

Absolute Maximum Ratings

DC Supply Voltage, V_{CC} . . . . . -0.5V to 7V
DC Input Diode Current, I_{IK}
For V_I < -0.5V or V_I > V_{CC} + 0.5V . . . . . ±20mA
DC Output Diode Current, I_{OK}
For V_O < -0.5V or V_O > V_{CC} + 0.5V . . . . . ±20mA
DC Output Source or Sink Current per Output Pin, I_O
For V_O > -0.5V or V_O < V_{CC} + 0.5V . . . . . ±25mA
DC V_{CC} or Ground Current, I_{CC} . . . . . ±50mA

Operating Conditions

Temperature Range (T_A) . . . . . -55°C to 125°C
Supply Voltage Range, V_{CC}
HC Types . . . . . 2V to 6V
HCT Types . . . . . 4.5V to 5.5V
DC Input or Output Voltage, V_I, V_O . . . . . 0V to V_{CC}
Input Rise and Fall Time
2V . . . . . 1000ns (Max)
4.5V. . . . . 500ns (Max)
6V . . . . . 400ns (Max)

Thermal Information

Package Thermal Impedance, θ_{JA} (see Note 1):
E (PDIP) Package . . . . . 67°C/W
M (SOIC) Package. . . . . 73°C/W
NS (SOP) Package . . . . . 64°C/W
PW (TSSOP) Package . . . . . 108°C/W
Maximum Junction Temperature . . . . . 150°C
Maximum Storage Temperature Range . . . . . -65°C to 150°C
Maximum Lead Temperature (Soldering 10s) . . . . . 300°C
(SOIC - Lead Tips Only)

CAUTION: Stresses above those listed in "Absolute Maximum Ratings" may cause permanent damage to the device. This is a stress only rating and operation of the device at these or any other conditions above those indicated in the operational sections of this specification is not implied.

NOTE:

1. The package thermal impedance is calculated in accordance with JESD 51-7.

DC Electrical Specifications

PARAMETER	SYMBOL	TEST CONDITIONS V_I (V)	TEST CONDITIONS I_O (mA)	V_{CC} (V)	25°C MIN	25°C TYP	25°C MAX	-40°C TO 85°C MIN	-40°C TO 85°C MAX	-55°C TO 125°C MIN	-55°C TO 125°C MAX	UNITS
HC TYPES												
High Level Input Voltage	V_{IH}	-	-	2	1.5	-	-	1.5	-	1.5	-	V
				4.5	3.15	-	-	3.15	-	3.15	-	V
				6	4.2	-	-	4.2	-	4.2	-	V
Low Level Input Voltage	V_{IL}	-	-	2	-	-	0.5	-	0.5	-	0.5	V
				4.5	-	-	1.35	-	1.35	-	1.35	V
				6	-	-	1.8	-	1.8	-	1.8	V
High Level Output Voltage CMOS Loads	V_{OH}	V_{IH} or V_{IL}	-0.02	2	1.9	-	-	1.9	-	1.9	-	V
			-0.02	4.5	4.4	-	-	4.4	-	4.4	-	V
			-0.02	6	5.9	-	-	5.9	-	5.9	-	V
High Level Output Voltage TTL Loads			-	-	-	-	-	-	-	-	-	V
			-4	4.5	3.98	-	-	3.84	-	3.7	-	V
			-5.2	6	5.48	-	-	5.34	-	5.2	-	V
Low Level Output Voltage CMOS Loads	V_{OL}	V_{IH} or V_{IL}	0.02	2	-	-	0.1	-	0.1	-	0.1	V
			0.02	4.5	-	-	0.1	-	0.1	-	0.1	V
			0.02	6	-	-	0.1	-	0.1	-	0.1	V
Low Level Output Voltage TTL Loads			-	-	-	-	-	-	-	-	-	V
			4	4.5	-	-	0.26	-	0.33	-	0.4	V
			5.2	6	-	-	0.26	-	0.33	-	0.4	V
Input Leakage Current	I_I	V_{CC} or GND	-	6	-	-	±0.1	-	±1	-	±1	∝A

DC Electrical Specifications (Continued)

PARAMETER	SYMBOL	TEST CONDITIONS V_I (V)	TEST CONDITIONS I_O (mA)	V_{CC} (V)	25°C MIN	25°C TYP	25°C MAX	-40°C TO 85°C MIN	-40°C TO 85°C MAX	-55°C TO 125°C MIN	-55°C TO 125°C MAX	UNITS
Quiescent Device Current	I_{CC}	V_{CC} or GND	0	6	-	-	8	-	80	-	160	∝A
HCT TYPES												
High Level Input Voltage	V_{IH}	-	-	4.5 to 5.5	2	-	-	2	-	2	-	V
Low Level Input Voltage	V_{IL}	-	-	4.5 to 5.5	-	-	0.8	-	0.8	-	0.8	V
High Level Output Voltage CMOS Loads	V_{OH}	V_{IH} or V_{IL}	-0.02	4.5	4.4	-	-	4.4	-	4.4	-	V
High Level Output Voltage TTL Loads			-4	4.5	3.98	-	-	3.84	-	3.7	-	V
Low Level Output Voltage CMOS Loads	V_{OL}	V_{IH} or V_{IL}	0.02	4.5	-	-	0.1	-	0.1	-	0.1	V
Low Level Output Voltage TTL Loads			4	4.5	-	-	0.26	-	0.33	-	0.4	V
Input Leakage Current	I_I	V_{CC} and GND	0	5.5	-	-	±0.1	-	±1	-	±1	∝A
Quiescent Device Current	I_{CC}	V_{CC} or GND	0	5.5	-	-	8	-	80	-	160	∝A
Additional Quiescent Device Current Per Input Pin: 1 Unit Load	ΔI_{CC} (Note 2)	V_{CC} -2.1	-	4.5 to 5.5	-	100	360	-	450	-	490	∝A

NOTE:

2. For dual-supply systems theoretical worst case (V_I = 2.4V, V_{CC} = 5.5V) specification is 1.8mA.

HCT Input Loading Table

INPUT	UNIT LOADS
All	1.5

NOTE: Unit Load is ΔI_{CC} limit specified in DC Electrical Table, e.g., 360∝A max at 25°C.

Prerequisite For Switching Specifications

PARAMETER	SYMBOL	V_{CC} (V)	25°C MIN	25°C TYP	25°C MAX	-40°C TO 85°C MIN	-40°C TO 85°C MAX	-55°C TO 125°C MIN	-55°C TO 125°C MAX	UNITS
HC TYPES										
A_n to LE Setup Time	t_{SU}	2	50	-	-	65	-	75	-	ns
		4.5	10	-	-	13	-	15	-	ns
		6	9	-	-	11	-	13	-	ns
A_n to LE Hold Time	t_H	2	30	-	-	40	-	45	-	ns
		4.5	6	-	-	8	-	9	-	ns
		6	5	-	-	7	-	8	-	ns

Prerequisite For Switching Specifications (Continued)

PARAMETER	SYMBOL	V_{CC} (V)	25°C			-40°C TO 85°C		-55°C TO 125°C		UNITS
			MIN	TYP	MAX	MIN	MAX	MIN	MAX	
LE Pulse Width	t_W	2	50	-	-	65	-	75	-	ns
		4.5	10	-	-	13	-	15	-	ns
		6	9	-	-	1	-	13	-	ns
HCT TYPES										
An to LE Setup Time	t_{SU}	4.5	10	-	-	13	-	15	-	ns
An to LE Hold Time CD74HCT137	t_H	4.5	7	-	-	9	-	11	-	ns
CD74HCT237	t_H	4.5	5	-	-	5	-	5	-	ns
LE Pulse Width	t_W	4.5	10	-	-	13	-	15	-	ns

Switching Specifications Input t_r, t_f = 6ns

PARAMETER	SYMBOL	TEST CONDITIONS	V_{CC} (V)	25°C			-40°C TO 85°C		-55°C TO 125°C		UNITS
				MIN	TYP	MAX	MIN	MAX	MIN	MAX	
HC TYPES											
Propagation Delay CD74HC137, CD74HCT137 An to any $\overline{Y}$	t_{PLH}, t_{PHL}	C_L = 50pF	2	-	-	180	-	225	-	270	ns
			4.5	-	-	36	-	45	-	54	ns
			6	-	-	31	-	38	-	46	ns
Propagation Delay 'HC237, CD74HCT237 An to any Y	t_{PLH}, t_{PHL}	C_L = 50pF	2	-	-	160	-	200	-	240	ns
			4.5	-	-	32	-	40	-	48	ns
			6	-	-	27	-	34	-	41	ns
Address to Output CD74HC137	t_{PLH}, t_{PHL}	C_L = 15pF	5	5	15	-	-	-	-	-	ns
'HC237	t_{PLH}, t_{PHL}	C_L = 15pF	5	-	13	-	-	-	-	-	ns
OE_0 to any $\overline{Y}$ or Y	t_{PLH}, t_{PHL}	C_L = 50pF	2	-	-	145	-	180	-	220	ns
			4.5	-	-	29	-	36	-	44	ns
			6	-	-	25	-	31	-	38	ns
$\overline{OE}_1$ to any $\overline{Y}$ or Y	t_{TLH}, t_{THL}	C_L = 50pF	2	-	-	145	-	180	-	220	ns
			4.5	-	-	29	-	36	-	44	ns
			6	-	-	25	-	31	-	38	ns
LE to any $\overline{Y}$ or Y	t_{TLH}, t_{THL}	C_L = 50pF	2	-	-	190	-	240	-	285	ns
			4.5	-	-	38	-	48	-	57	ns
			6	-	-	32	-	41	-	48	ns
Power Dissipation Capacitance, (Notes 3, 4) CD74HC137	C_{PD}	C_L = 15pF	5	-	19	-	-	-	-	-	pF
'HC237	C_{PD}	C_L = 15pF	5	-	23	-	-	-	-	-	pF
Output Transition Time	t_{TLH}, t_{THL}	C_L = 50pF	2	-	-	75	-	95	-	110	ns
			4.5	-	-	15	-	19	-	22	ns
			6	-	-	13	-	16	-	19	ns
Input Capacitance	C_I	-	-	-	-	10	-	10	-	10	pF

Switching Specifications Input t_r, t_f = 6ns **(Continued)**

PARAMETER	SYMBOL	TEST CONDITIONS	V_{CC} (V)	25°C MIN	25°C TYP	25°C MAX	-40°C TO 85°C MIN	-40°C TO 85°C MAX	-55°C TO 125°C MIN	-55°C TO 125°C MAX	UNITS
HCT TYPES											
Propagation Delay An to any $\overline{Y}$ or Y Address to Output	t_{PLH}, t_{PHL}	C_L = 50pF	4.5	-	-	38	-	48	-	57	ns
	t_{PLH}, t_{PHL}	C_L = 15pF	5	-	16	-	-	-	-	-	ns
OE_0 to any Y (HC137)	t_{PLH}, t_{PHL}	C_L = 50pF	4.5	-	-	35	-	44	-	53	ns
OE_0 to any $\overline{Y}$ (HC237)	t_{PLH}, t_{PHL}	C_L = 50pF	4.5	-	-	33	-	41	-	60	ns
$\overline{OE}_1$ to any $\overline{Y}$ (HC137)	t_{TLH}, t_{THL}	C_L = 50pF	4.5	-	-	37	-	46	-	56	ns
$\overline{OE}_1$ to any $\overline{Y}$ (HC237)	t_{TLH}, t_{THL}	C_L = 50pF	4.5	-	-	35	-	44	-	53	ns
LE to any Y (HC137)	t_{TLH}, t_{THL}	CL = 50pF	4.5	-	-	44	-	55	-	66	ns
LE to any $\overline{Y}$ (HC237)	t_{TLH}, t_{THL}	C_L = 50pF	4.5	-	-	42	-	53	-	63	ns
Power Dissipation Capacitance, (Notes 3, 4) CD74HC137	C_{PD}	C_L = 15pF	5	-	19	-	-	-	-	-	pF
'HC237	C_{PD}	C_L = 15pF	5	-	23	-	-	-	-	-	pF
Output Transition Time	t_{TLH}, t_{THL}	C_L = 50pF	4.5			15		19		22	ns
Input Capacitance	C_I	-	-	-	-	10	-	10	-	10	pF

NOTES:

3. C_{PD} is used to determine the dynamic power consumption, per gate.
4. $P_D = V_{CC}^2 f_i (C_{PD} + C_L)$ where: f_i = Input Frequency, C_L = Output Load Capacitance, V_{CC} = Supply Voltage.

Test Circuits and Waveforms

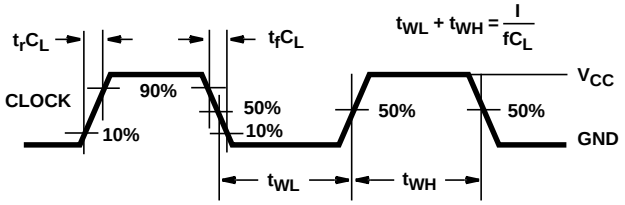

NOTE: Outputs should be switching from 10% V_{CC} to 90% V_{CC} in accordance with device truth table. For f_{MAX}, input duty cycle = 50%.

FIGURE 1. HC CLOCK PULSE RISE AND FALL TIMES AND PULSE WIDTH

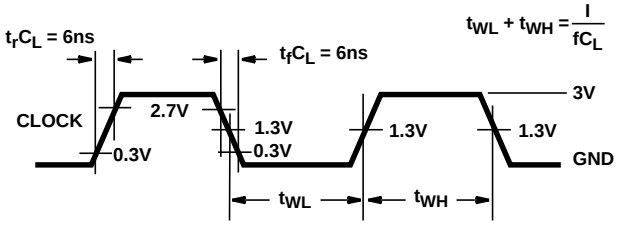

NOTE: Outputs should be switching from 10% V_{CC} to 90% V_{CC} in accordance with device truth table. For f_{MAX}, input duty cycle = 50%.

FIGURE 2. HCT CLOCK PULSE RISE AND FALL TIMES AND PULSE WIDTH

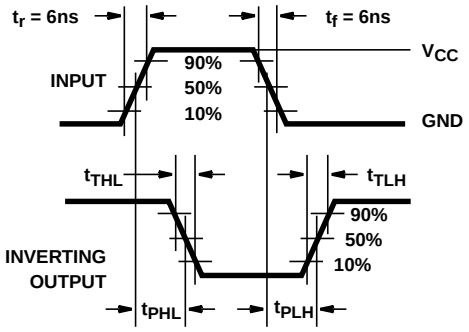

FIGURE 3. HC AND HCU TRANSITION TIMES AND PROPAGATION DELAY TIMES, COMBINATION LOGIC

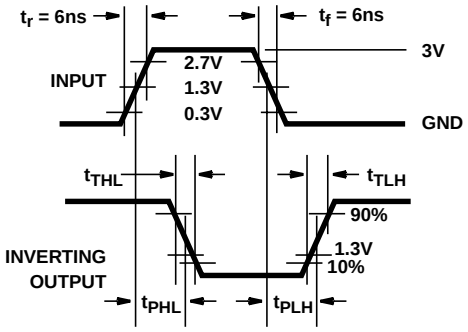

FIGURE 4. HCT TRANSITION TIMES AND PROPAGATION DELAY TIMES, COMBINATION LOGIC

Test Circuits and Waveforms (Continued)

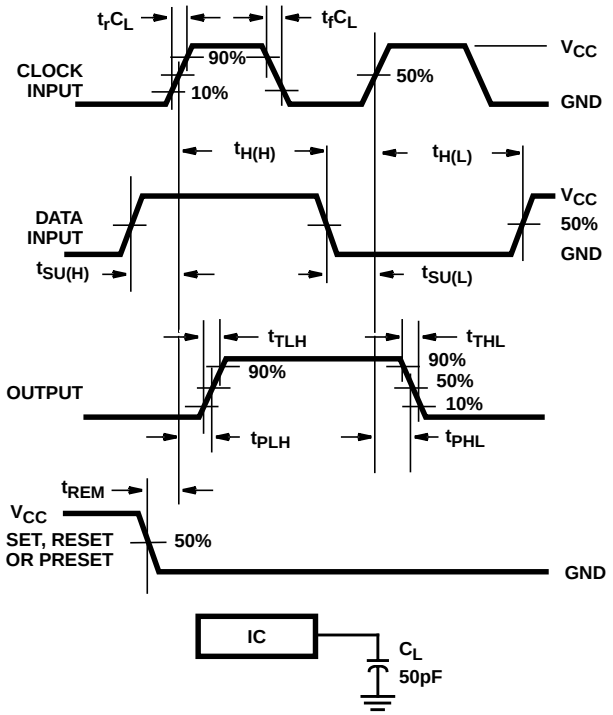

FIGURE 5. HC SETUP TIMES, HOLD TIMES, REMOVAL TIME, AND PROPAGATION DELAY TIMES FOR EDGE TRIGGERED SEQUENTIAL LOGIC CIRCUITS

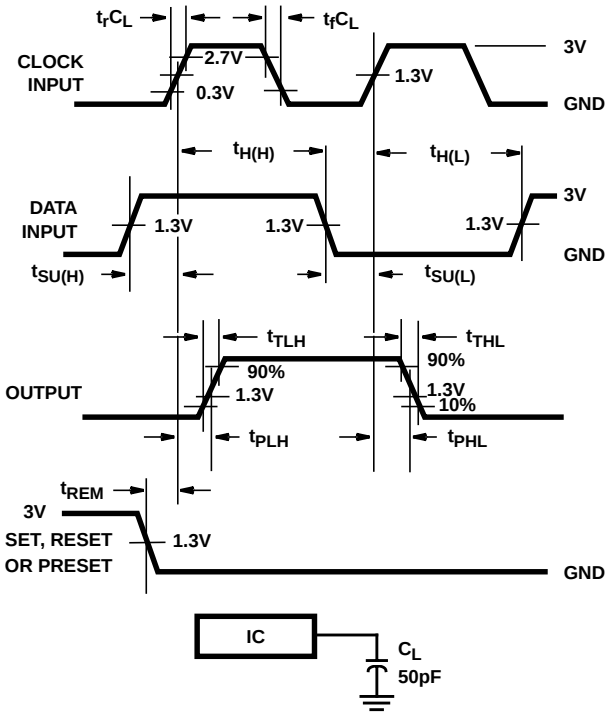

FIGURE 6. HCT SETUP TIMES, HOLD TIMES, REMOVAL TIME, AND PROPAGATION DELAY TIMES FOR EDGE TRIGGERED SEQUENTIAL LOGIC CIRCUITS

PACKAGING INFORMATION

Orderable part number	Status (1)	Material type (2)	Package | Pins	Package qty | Carrier	RoHS (3)	Lead finish/ Ball material (4)	MSL rating/ Peak reflow (5)	Op temp (°C)	Part marking (6)
5962-8860601EA	Active	Production	CDIP (J) | 16	25 | TUBE	No	SNPB	N/A for Pkg Type	-55 to 125	5962-8860601EA CD54HC237F3A
CD54HC237F	Active	Production	CDIP (J) | 16	25 | TUBE	No	SNPB	N/A for Pkg Type	-55 to 125	CD54HC237F
CD54HC237F.A	Active	Production	CDIP (J) | 16	25 | TUBE	No	SNPB	N/A for Pkg Type	-55 to 125	CD54HC237F
CD54HC237F3A	Active	Production	CDIP (J) | 16	25 | TUBE	No	SNPB	N/A for Pkg Type	-55 to 125	5962-8860601EA CD54HC237F3A
CD54HC237F3A.A	Active	Production	CDIP (J) | 16	25 | TUBE	No	SNPB	N/A for Pkg Type	-55 to 125	5962-8860601EA CD54HC237F3A
CD74HC137E	Active	Production	PDIP (N) | 16	25 | TUBE	Yes	NIPDAU	N/A for Pkg Type	-55 to 125	CD74HC137E
CD74HC137E.A	Active	Production	PDIP (N) | 16	25 | TUBE	Yes	NIPDAU	N/A for Pkg Type	-55 to 125	CD74HC137E
CD74HC137PW	Obsolete	Production	TSSOP (PW) | 16	-	-	Call TI	Call TI	-55 to 125	HJ137
CD74HC137PWR	Active	Production	TSSOP (PW) | 16	2000 | LARGE T&R	Yes	NIPDAU	Level-1-260C-UNLIM	-55 to 125	HJ137
CD74HC137PWR.A	Active	Production	TSSOP (PW) | 16	2000 | LARGE T&R	Yes	NIPDAU	Level-1-260C-UNLIM	-55 to 125	HJ137
CD74HC237DYYR	Active	Production	SOT-23-THIN (DYY) | 16	3000 | LARGE T&R	Yes	NIPDAU	Level-1-260C-UNLIM	-55 to 125	HJ237
CD74HC237DYYR.A	Active	Production	SOT-23-THIN (DYY) | 16	3000 | LARGE T&R	Yes	NIPDAU	Level-1-260C-UNLIM	-40 to 125	HJ237
CD74HC237E	Active	Production	PDIP (N) | 16	25 | TUBE	Yes	NIPDAU	N/A for Pkg Type	-55 to 125	CD74HC237E
CD74HC237E.A	Active	Production	PDIP (N) | 16	25 | TUBE	Yes	NIPDAU	N/A for Pkg Type	-55 to 125	CD74HC237E
CD74HC237EE4	Active	Production	PDIP (N) | 16	25 | TUBE	Yes	NIPDAU	N/A for Pkg Type	-55 to 125	CD74HC237E
CD74HC237M	Obsolete	Production	SOIC (D) | 16	-	-	Call TI	Call TI	-55 to 125	HC237M
CD74HC237M96	Active	Production	SOIC (D) | 16	2500 | LARGE T&R	Yes	NIPDAU | SN	Level-1-260C-UNLIM	-55 to 125	HC237M
CD74HC237M96.A	Active	Production	SOIC (D) | 16	2500 | LARGE T&R	Yes	NIPDAU	Level-1-260C-UNLIM	-55 to 125	HC237M
CD74HC237M961G4	Active	Production	SOIC (D) | 16	2500 | LARGE T&R	Yes	NIPDAU	Level-1-260C-UNLIM	-55 to 125	HC237M
CD74HC237M961G4.A	Active	Production	SOIC (D) | 16	2500 | LARGE T&R	Yes	NIPDAU	Level-1-260C-UNLIM	-55 to 125	HC237M
CD74HC237NSR	Active	Production	SOP (NS) | 16	2000 | LARGE T&R	Yes	NIPDAU	Level-1-260C-UNLIM	-55 to 125	HC237M
CD74HC237NSR.A	Active	Production	SOP (NS) | 16	2000 | LARGE T&R	Yes	NIPDAU	Level-1-260C-UNLIM	-55 to 125	HC237M
CD74HC237PWR	Active	Production	TSSOP (PW) | 16	2000 | LARGE T&R	Yes	NIPDAU | SN	Level-1-260C-UNLIM	-55 to 125	HJ237
CD74HC237PWR.A	Active	Production	TSSOP (PW) | 16	2000 | LARGE T&R	Yes	NIPDAU	Level-1-260C-UNLIM	-55 to 125	HJ237
CD74HC237PWT	Obsolete	Production	TSSOP (PW) | 16	-	-	Call TI	Call TI	-55 to 125	HJ237

Orderable part number	Status (1)	Material type (2)	Package | Pins	Package qty | Carrier	RoHS (3)	Lead finish/ Ball material (4)	MSL rating/ Peak reflow (5)	Op temp (°C)	Part marking (6)
CD74HCT137E	Active	Production	PDIP (N) | 16	25 | TUBE	Yes	NIPDAU	N/A for Pkg Type	-55 to 125	CD74HCT137E
CD74HCT137E.A	Active	Production	PDIP (N) | 16	25 | TUBE	Yes	NIPDAU	N/A for Pkg Type	-55 to 125	CD74HCT137E
CD74HCT137M96	Active	Production	SOIC (D) | 16	2500 | LARGE T&R	Yes	NIPDAU	Level-1-260C-UNLIM	-55 to 125	HCT137M
CD74HCT137M96.A	Active	Production	SOIC (D) | 16	2500 | LARGE T&R	Yes	NIPDAU	Level-1-260C-UNLIM	-55 to 125	HCT137M
CD74HCT137MT	Obsolete	Production	SOIC (D) | 16	-	-	Call TI	Call TI	-55 to 125	HCT137M
CD74HCT237E	Active	Production	PDIP (N) | 16	25 | TUBE	Yes	NIPDAU	N/A for Pkg Type	-55 to 125	CD74HCT237E
CD74HCT237E.A	Active	Production	PDIP (N) | 16	25 | TUBE	Yes	NIPDAU	N/A for Pkg Type	-55 to 125	CD74HCT237E

(1) **Status:** For more details on status, see our product life cycle.

(2) **Material type:** When designated, preproduction parts are prototypes/experimental devices, and are not yet approved or released for full production. Testing and final process, including without limitation quality assurance, reliability performance testing, and/or process qualification, may not yet be complete, and this item is subject to further changes or possible discontinuation. If available for ordering, purchases will be subject to an additional waiver at checkout, and are intended for early internal evaluation purposes only. These items are sold without warranties of any kind.

(3) **RoHS values:** Yes, No, RoHS Exempt. See the TI RoHS Statement for additional information and value definition.

(4) **Lead finish/Ball material:** Parts may have multiple material finish options. Finish options are separated by a vertical ruled line. Lead finish/Ball material values may wrap to two lines if the finish value exceeds the maximum column width.

(5) **MSL rating/Peak reflow:** The moisture sensitivity level ratings and peak solder (reflow) temperatures. In the event that a part has multiple moisture sensitivity ratings, only the lowest level per JEDEC standards is shown. Refer to the shipping label for the actual reflow temperature that will be used to mount the part to the printed circuit board.

(6) **Part marking:** There may be an additional marking, which relates to the logo, the lot trace code information, or the environmental category of the part.

Multiple part markings will be inside parentheses. Only one part marking contained in parentheses and separated by a "~" will appear on a part. If a line is indented then it is a continuation of the previous line and the two combined represent the entire part marking for that device.

Important Information and Disclaimer: The information provided on this page represents TI's knowledge and belief as of the date that it is provided. TI bases its knowledge and belief on information provided by third parties, and makes no representation or warranty as to the accuracy of such information. Efforts are underway to better integrate information from third parties. TI has taken and continues to take reasonable steps to provide representative and accurate information but may not have conducted destructive testing or chemical analysis on incoming materials and chemicals. TI and TI suppliers consider certain information to be proprietary, and thus CAS numbers and other limited information may not be available for release.

In no event shall TI's liability arising out of such information exceed the total purchase price of the TI part(s) at issue in this document sold by TI to Customer on an annual basis.

OTHER QUALIFIED VERSIONS OF CD54HC237, CD74HC237 :

- Catalog : CD74HC237
- Military : CD54HC237

NOTE: Qualified Version Definitions:

- Catalog - TI's standard catalog product
- Military - QML certified for Military and Defense Applications

TAPE AND REEL INFORMATION

REEL DIMENSIONS

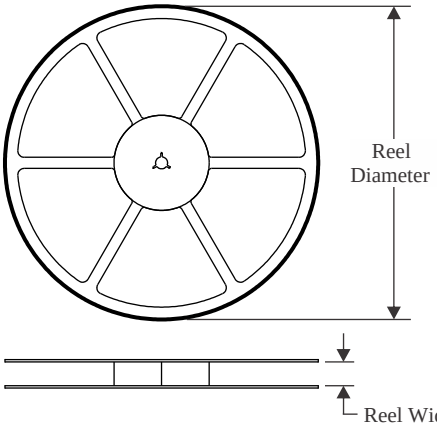

TAPE DIMENSIONS

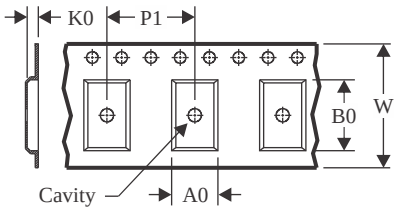

A0	Dimension designed to accommodate the component width
B0	Dimension designed to accommodate the component length
K0	Dimension designed to accommodate the component thickness
W	Overall width of the carrier tape
P1	Pitch between successive cavity centers

QUADRANT ASSIGNMENTS FOR PIN 1 ORIENTATION IN TAPE

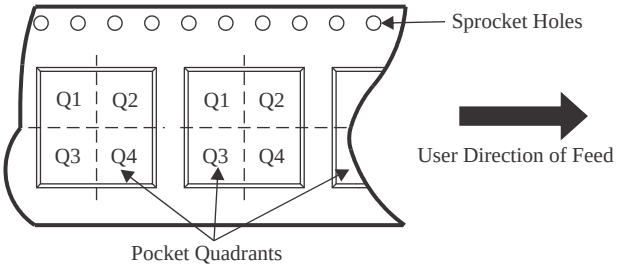

*All dimensions are nominal

Device	Package Type	Package Drawing	Pins	SPQ	Reel Diameter (mm)	Reel Width W1 (mm)	A0 (mm)	B0 (mm)	K0 (mm)	P1 (mm)	W (mm)	Pin1 Quadrant
CD74HC137PWR	TSSOP	PW	16	2000	330.0	12.4	6.9	5.6	1.6	8.0	12.0	Q1
CD74HC237DYYR	SOT-23-THIN	DYY	16	3000	330.0	12.4	4.8	3.6	1.6	8.0	12.0	Q3
CD74HC237M96	SOIC	D	16	2500	330.0	16.4	6.5	10.3	2.1	8.0	16.0	Q1
CD74HC237M961G4	SOIC	D	16	2500	330.0	16.4	6.5	10.3	2.1	8.0	16.0	Q1
CD74HC237NSR	SOP	NS	16	2000	330.0	16.4	8.1	10.4	2.5	12.0	16.0	Q1
CD74HC237PWR	TSSOP	PW	16	2000	330.0	12.4	6.9	5.3	1.6	8.0	12.0	Q1
CD74HC237PWR	TSSOP	PW	16	2000	330.0	12.4	6.9	5.6	1.6	8.0	12.0	Q1
CD74HCT137M96	SOIC	D	16	2500	330.0	16.4	6.5	10.3	2.1	8.0	16.0	Q1

TAPE AND REEL BOX DIMENSIONS

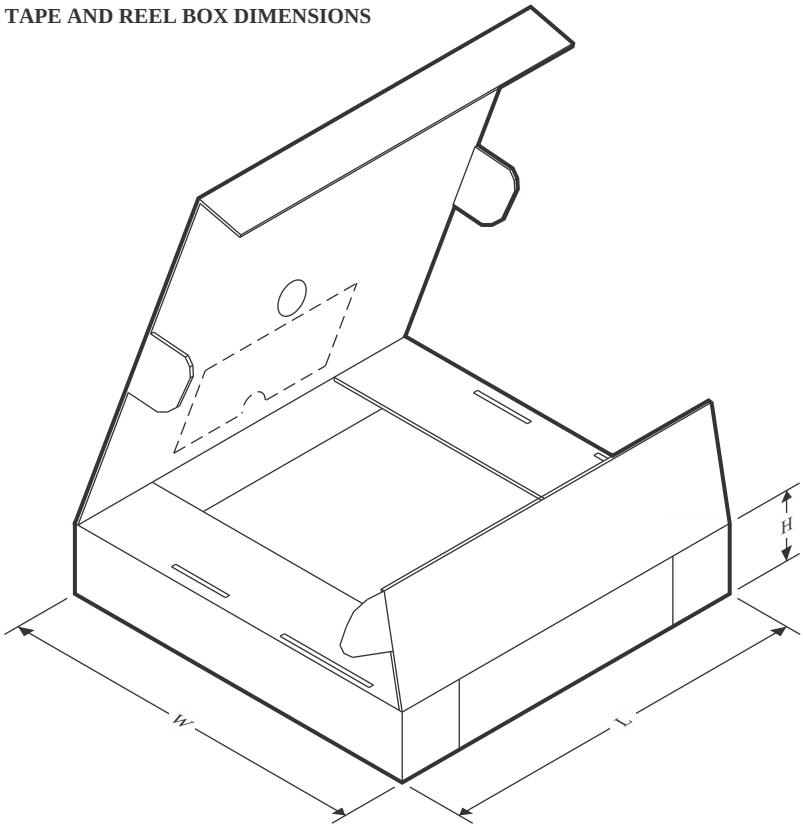

*All dimensions are nominal

Device	Package Type	Package Drawing	Pins	SPQ	Length (mm)	Width (mm)	Height (mm)
CD74HC137PWR	TSSOP	PW	16	2000	353.0	353.0	32.0
CD74HC237DYYR	SOT-23-THIN	DYY	16	3000	336.6	336.6	31.8
CD74HC237M96	SOIC	D	16	2500	353.0	353.0	32.0
CD74HC237M961G4	SOIC	D	16	2500	353.0	353.0	32.0
CD74HC237NSR	SOP	NS	16	2000	353.0	353.0	32.0
CD74HC237PWR	TSSOP	PW	16	2000	367.0	367.0	35.0
CD74HC237PWR	TSSOP	PW	16	2000	356.0	356.0	35.0
CD74HCT137M96	SOIC	D	16	2500	353.0	353.0	32.0

TUBE

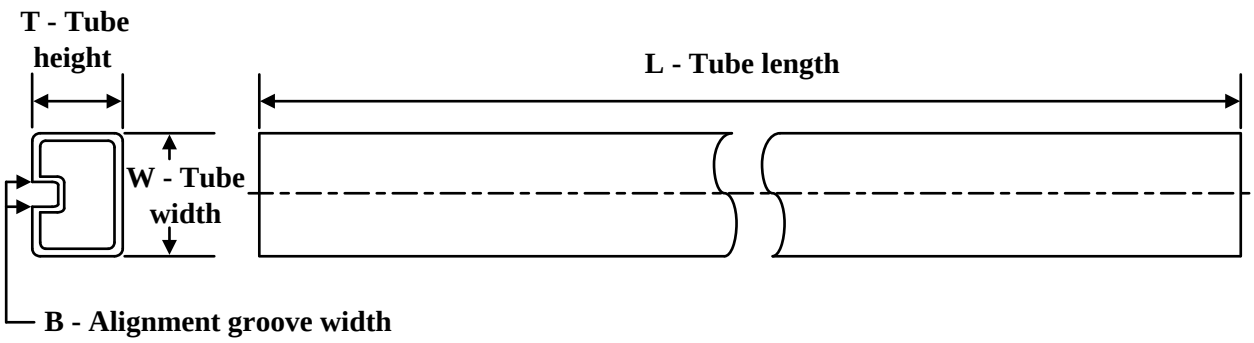

*All dimensions are nominal

Device	Package Name	Package Type	Pins	SPQ	L (mm)	W (mm)	T (µm)	B (mm)
CD74HC137E	N	PDIP	16	25	506	13.97	11230	4.32
CD74HC137E	N	PDIP	16	25	506	13.97	11230	4.32
CD74HC137E.A	N	PDIP	16	25	506	13.97	11230	4.32
CD74HC137E.A	N	PDIP	16	25	506	13.97	11230	4.32
CD74HC237E	N	PDIP	16	25	506	13.97	11230	4.32
CD74HC237E	N	PDIP	16	25	506	13.97	11230	4.32
CD74HC237E.A	N	PDIP	16	25	506	13.97	11230	4.32
CD74HC237E.A	N	PDIP	16	25	506	13.97	11230	4.32
CD74HC237EE4	N	PDIP	16	25	506	13.97	11230	4.32
CD74HC237EE4	N	PDIP	16	25	506	13.97	11230	4.32
CD74HCT137E	N	PDIP	16	25	506	13.97	11230	4.32
CD74HCT137E	N	PDIP	16	25	506	13.97	11230	4.32
CD74HCT137E.A	N	PDIP	16	25	506	13.97	11230	4.32
CD74HCT137E.A	N	PDIP	16	25	506	13.97	11230	4.32
CD74HCT237E	N	PDIP	16	25	506	13.97	11230	4.32
CD74HCT237E	N	PDIP	16	25	506	13.97	11230	4.32
CD74HCT237E.A	N	PDIP	16	25	506	13.97	11230	4.32
CD74HCT237E.A	N	PDIP	16	25	506	13.97	11230	4.32

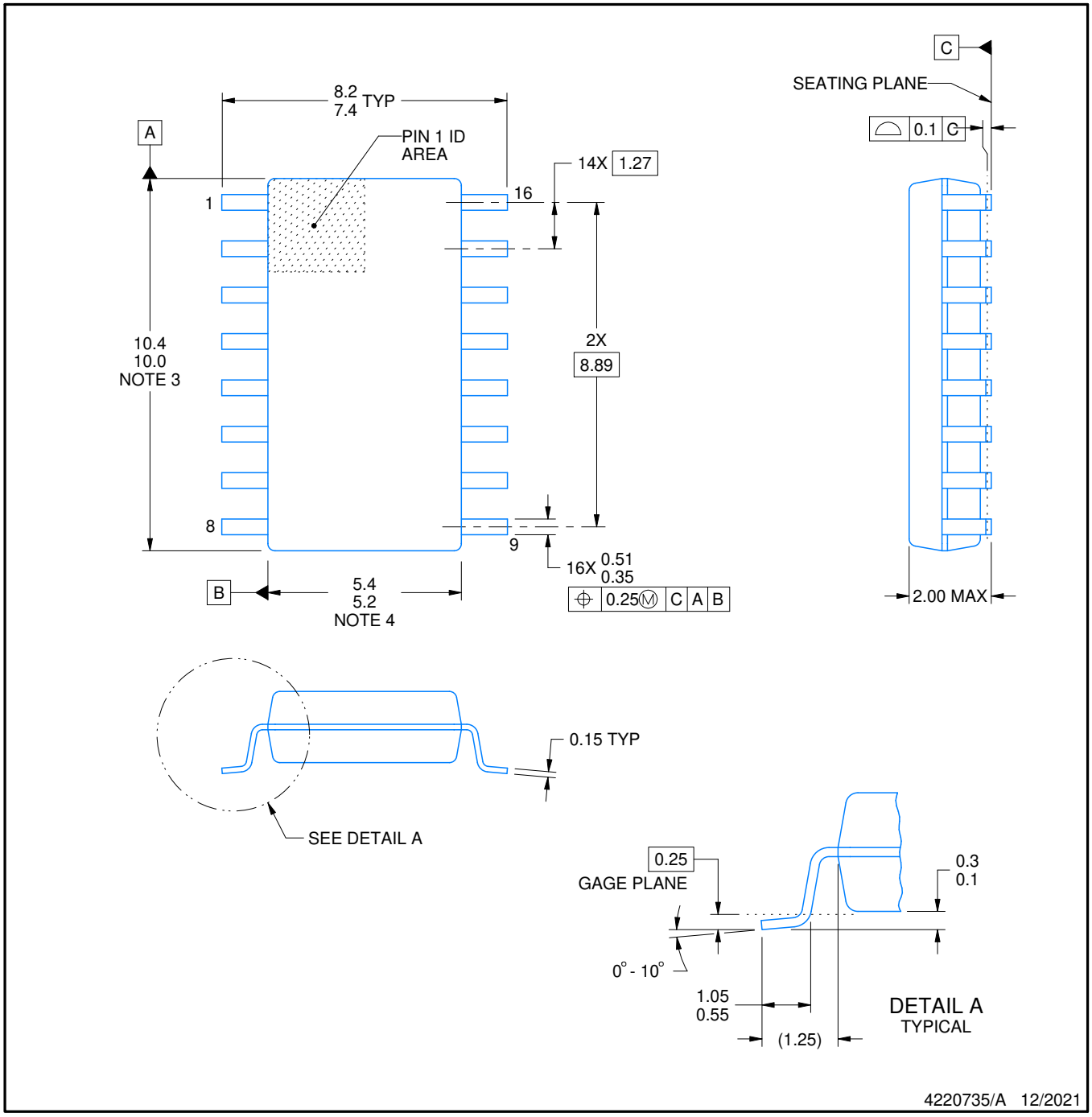

NOTES:

1. All linear dimensions are in millimeters. Dimensions in parenthesis are for reference only. Dimensioning and tolerancing per ASME Y14.5M.
2. This drawing is subject to change without notice.
3. This dimension does not include mold flash, protrusions, or gate burrs. Mold flash, protrusions, or gate burrs shall not exceed 0.15 mm, per side.
4. This dimension does not include interlead flash. Interlead flash shall not exceed 0.25 mm, per side.

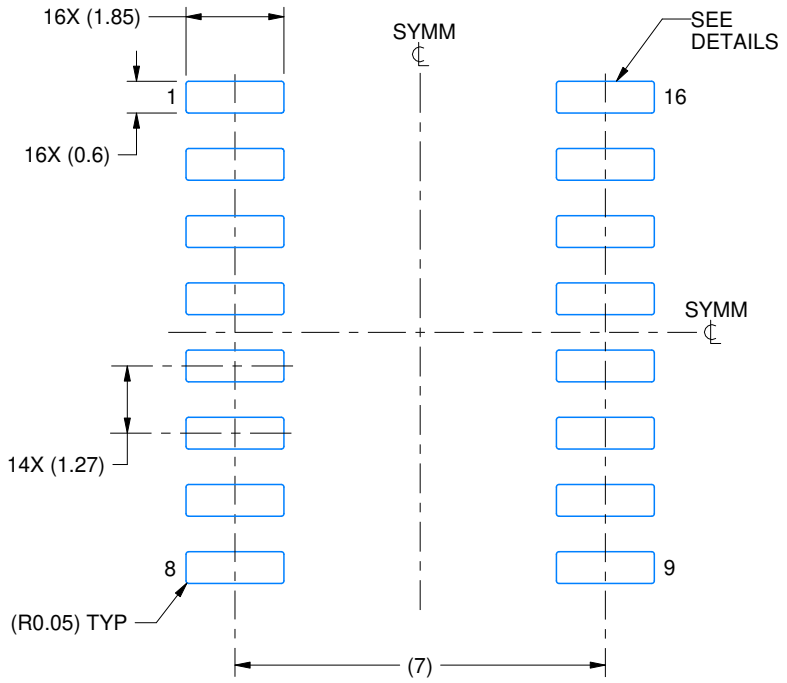

LAND PATTERN EXAMPLE
SCALE:7X

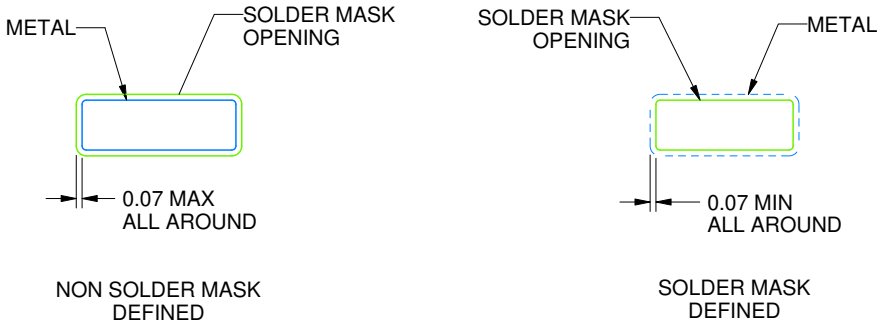

SOLDER MASK DETAILS

4220735/A 12/2021

NOTES: (continued)

5. Publication IPC-7351 may have alternate designs.
6. Solder mask tolerances between and around signal pads can vary based on board fabrication site.

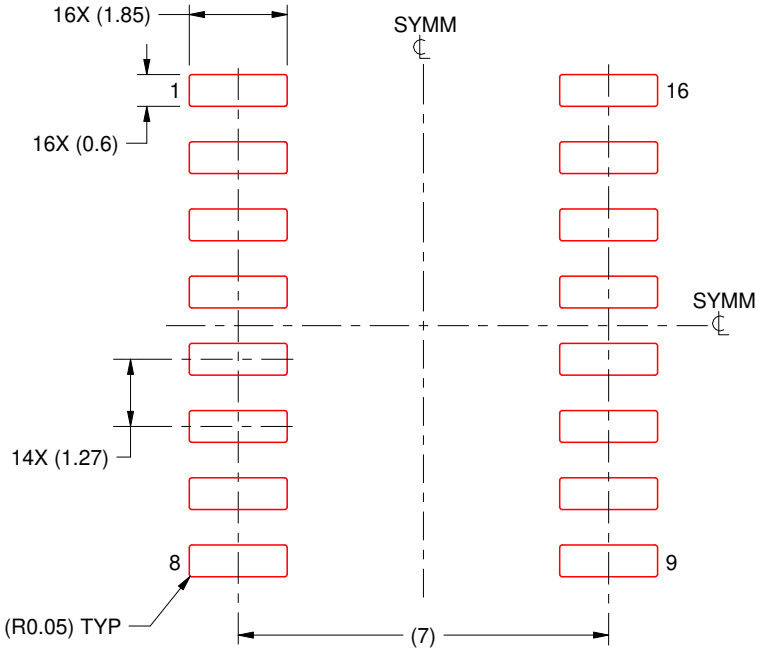

SOLDER PASTE EXAMPLE
BASED ON 0.125 mm THICK STENCIL
SCALE:7X

4220735/A 12/2021

NOTES: (continued)

7. Laser cutting apertures with trapezoidal walls and rounded corners may offer better paste release. IPC-7525 may have alternate design recommendations.
8. Board assembly site may have different recommendations for stencil design.

D (R–PDSO–G16) PLASTIC SMALL OUTLINE

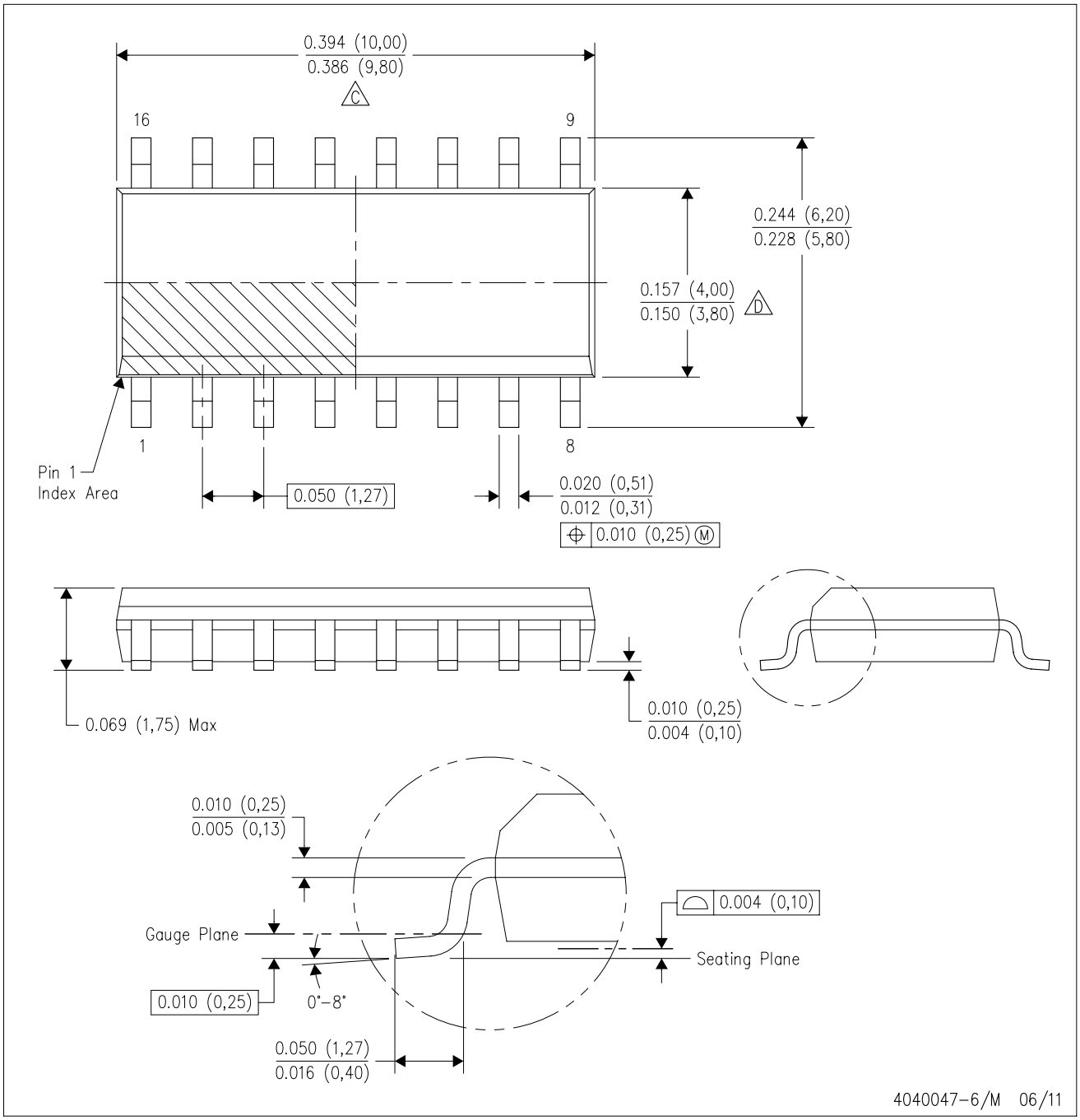

NOTES:
A. All linear dimensions are in inches (millimeters).
B. This drawing is subject to change without notice.
C. Body length does not include mold flash, protrusions, or gate burrs. Mold flash, protrusions, or gate burrs shall not exceed 0.006 (0,15) each side.
D. Body width does not include interlead flash. Interlead flash shall not exceed 0.017 (0,43) each side.
E. Reference JEDEC MS–012 variation AC.

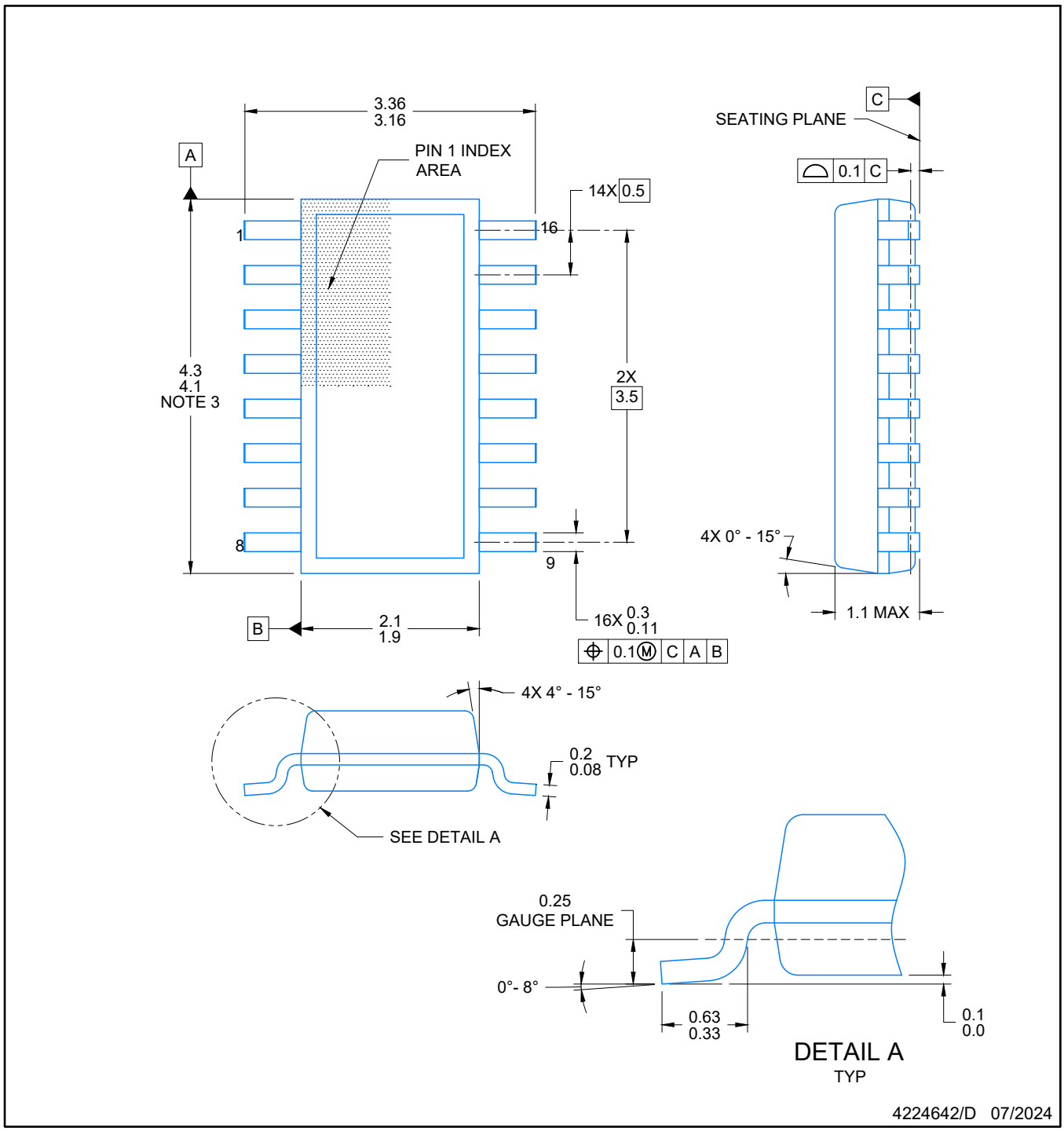

NOTES:

1. All linear dimensions are in millimeters. Any dimensions in parenthesis are for reference only. Dimensioning and tolerancing per ASME Y14.5M.
2. This drawing is subject to change without notice.
3. This dimension does not include mold flash, protrusions, or gate burrs. Mold flash, protrusions, or gate burrs shall not exceed 0.15 per side.
4. This dimension does not include interlead flash. Interlead flash shall not exceed 0.50 per side.
5. Reference JEDEC Registration MO-345, Variation AA

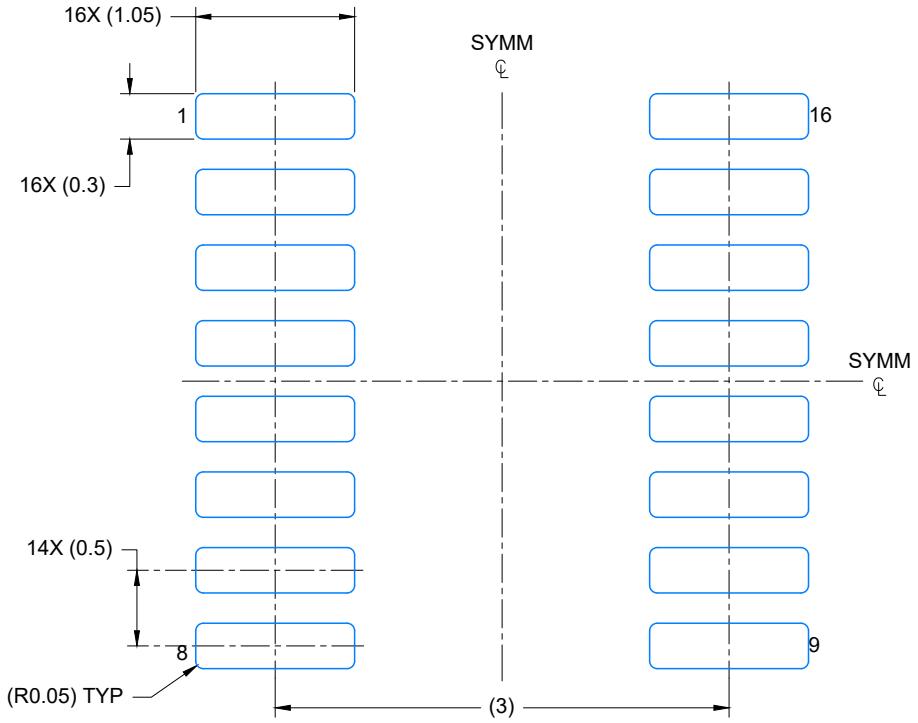

LAND PATTERN EXAMPLE
EXPOSED METAL SHOWN
SCALE: 20X

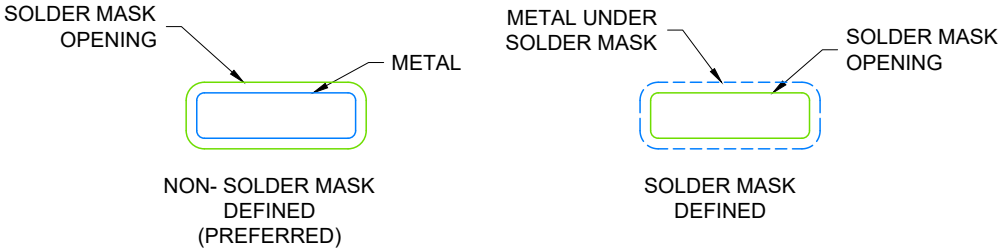

SOLDER MASK DETAILS

4224642/D 07/2024

NOTES: (continued)

6. Publication IPC-7351 may have alternate designs.
7. Solder mask tolerances between and around signal pads can vary based on board fabrication site.

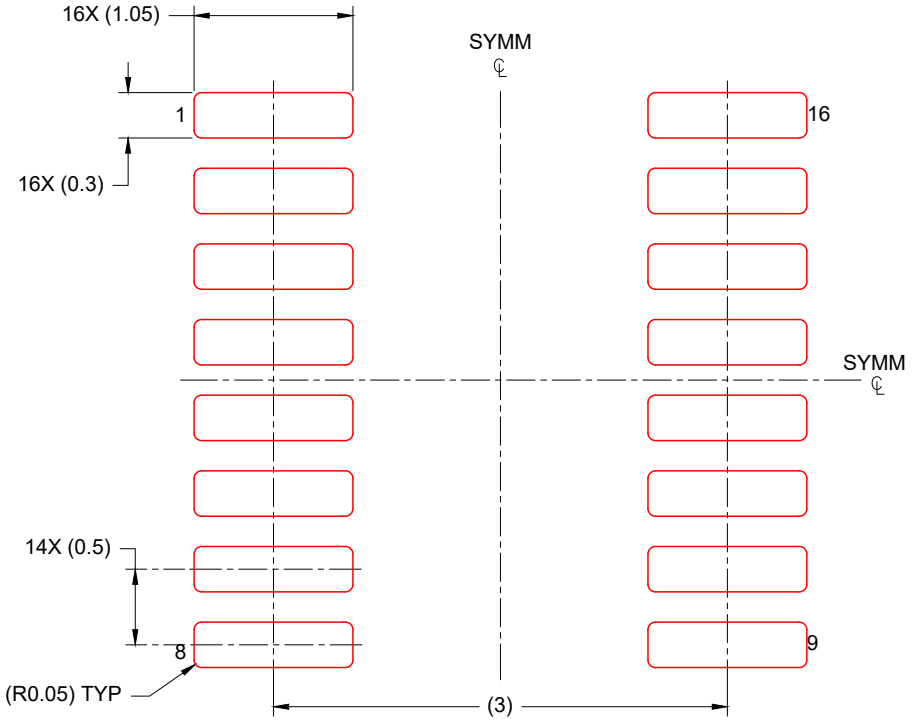

SOLDER PASTE EXAMPLE
BASED ON 0.125 mm THICK STENCIL
SCALE: 20X

4224642/D 07/2024

NOTES: (continued)

8. Laser cutting apertures with trapezoidal walls and rounded corners may offer better paste release. IPC-7525 may have alternate design recommendations.
9. Board assembly site may have different recommendations for stencil design.

J (R–GDIP–T**) CERAMIC DUAL IN–LINE PACKAGE

14 LEADS SHOWN

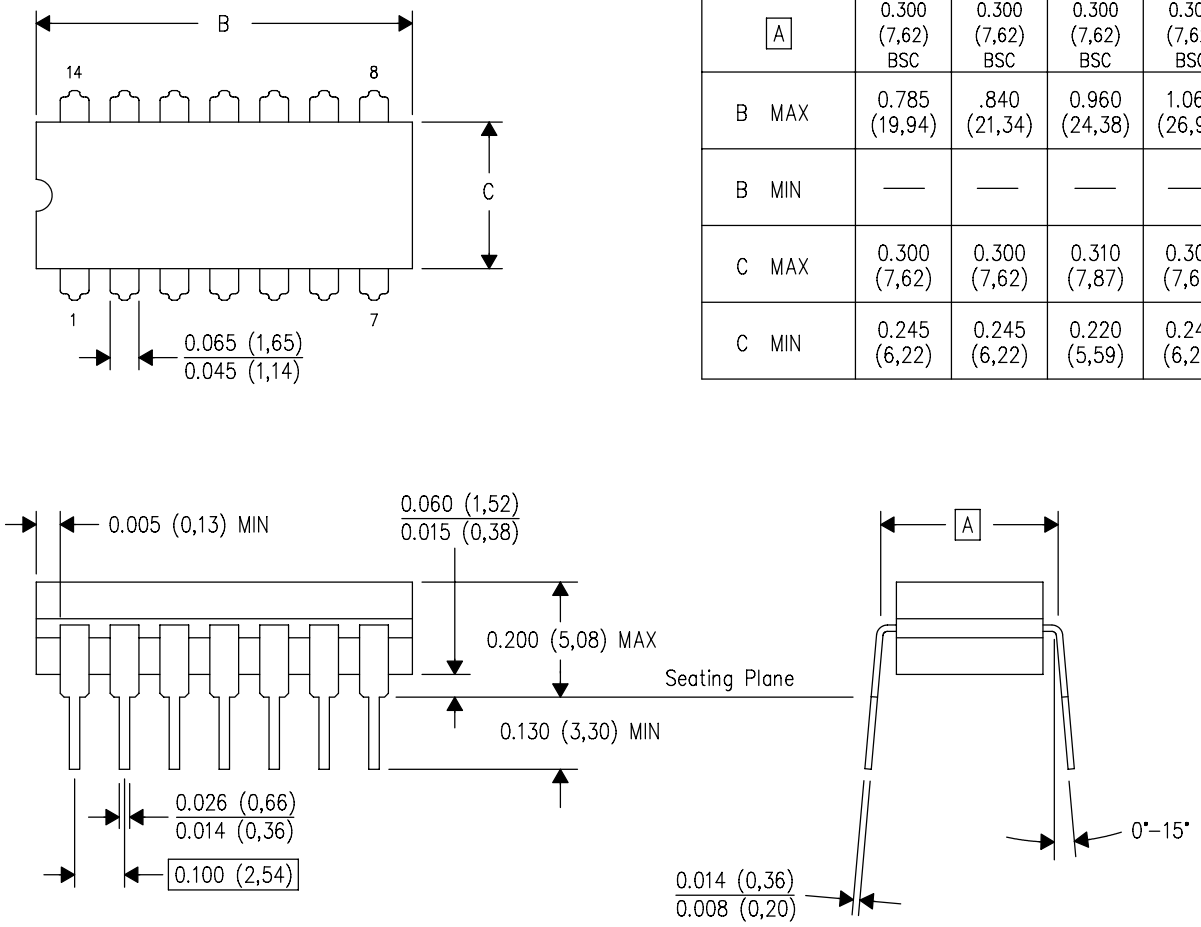

DIM \ PINS **	14	16	18	20
A	0.300 (7,62) BSC	0.300 (7,62) BSC	0.300 (7,62) BSC	0.300 (7,62) BSC
B MAX	0.785 (19,94)	.840 (21,34)	0.960 (24,38)	1.060 (26,92)
B MIN	—	—	—	—
C MAX	0.300 (7,62)	0.300 (7,62)	0.310 (7,87)	0.300 (7,62)
C MIN	0.245 (6,22)	0.245 (6,22)	0.220 (5,59)	0.245 (6,22)

4040083/F 03/03

NOTES:
A. All linear dimensions are in inches (millimeters).
B. This drawing is subject to change without notice.
C. This package is hermetically sealed with a ceramic lid using glass frit.
D. Index point is provided on cap for terminal identification only on press ceramic glass frit seal only.
E. Falls within MIL STD 1835 GDIP1–T14, GDIP1–T16, GDIP1–T18 and GDIP1–T20.

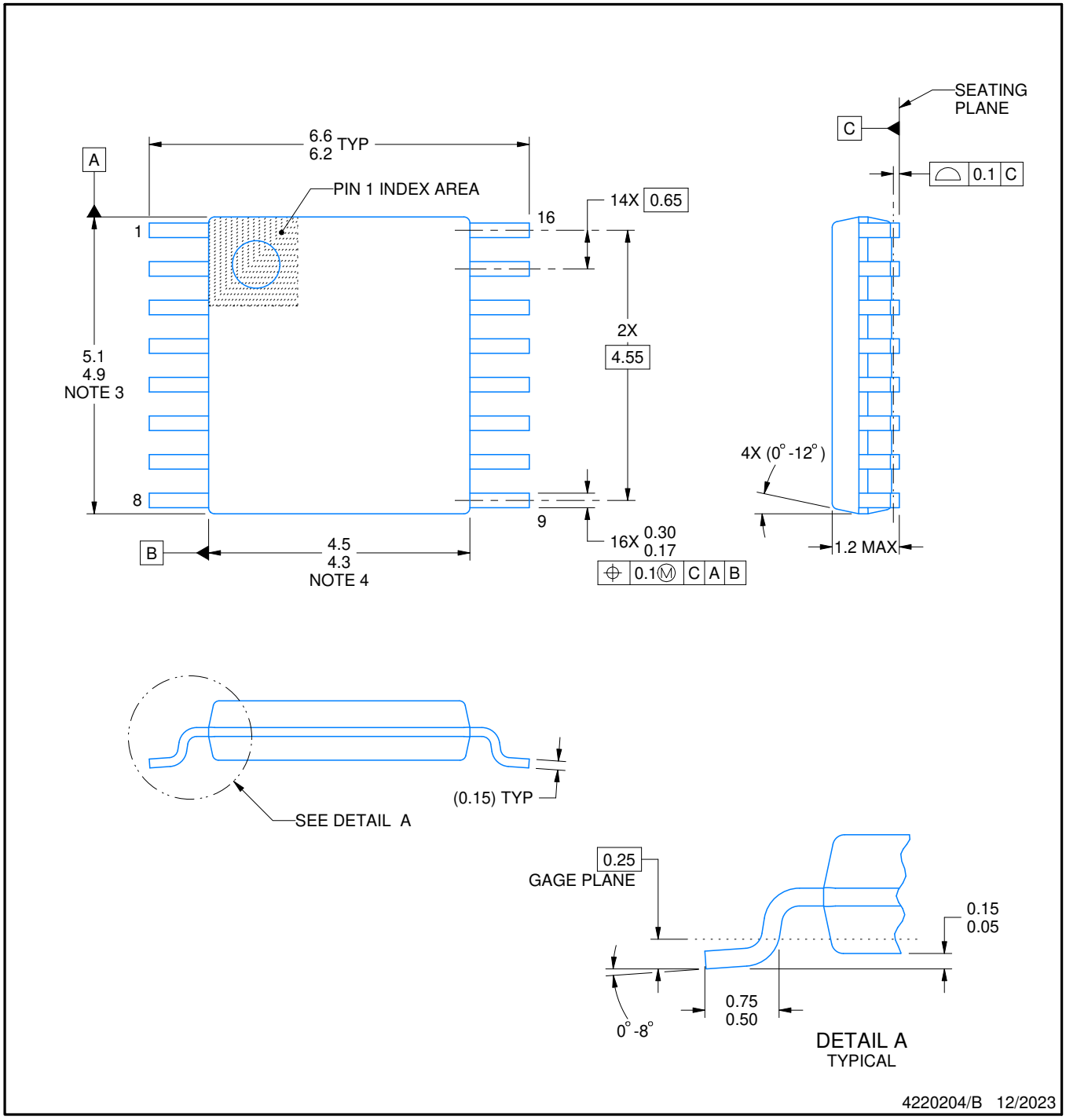

NOTES:

1. All linear dimensions are in millimeters. Any dimensions in parenthesis are for reference only. Dimensioning and tolerancing per ASME Y14.5M.
2. This drawing is subject to change without notice.
3. This dimension does not include mold flash, protrusions, or gate burrs. Mold flash, protrusions, or gate burrs shall not exceed 0.15 mm per side.
4. This dimension does not include interlead flash. Interlead flash shall not exceed 0.25 mm per side.
5. Reference JEDEC registration MO-153.

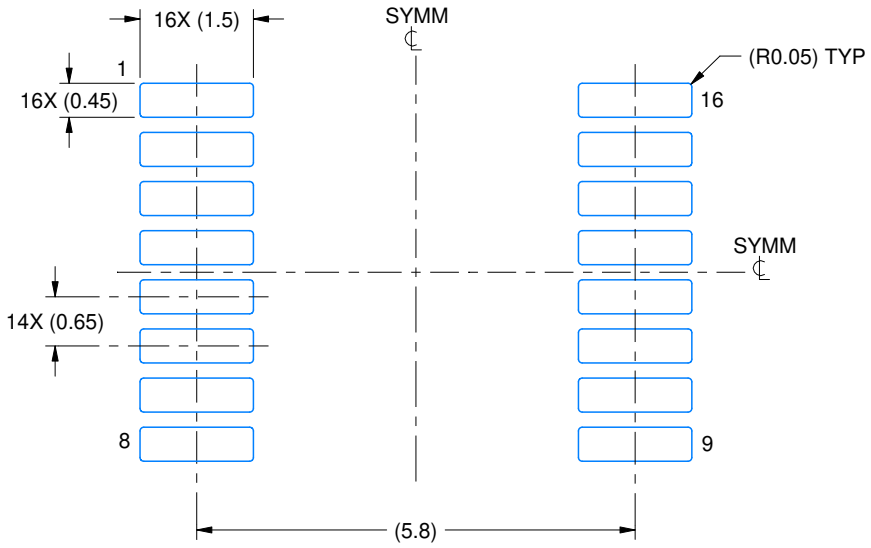

LAND PATTERN EXAMPLE
EXPOSED METAL SHOWN
SCALE: 10X

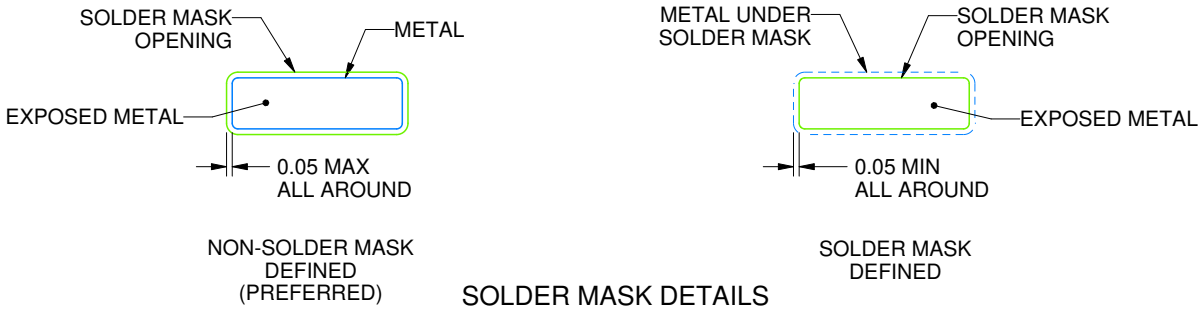

SOLDER MASK DETAILS

4220204/B 12/2023

NOTES: (continued)

6. Publication IPC-7351 may have alternate designs.
7. Solder mask tolerances between and around signal pads can vary based on board fabrication site.

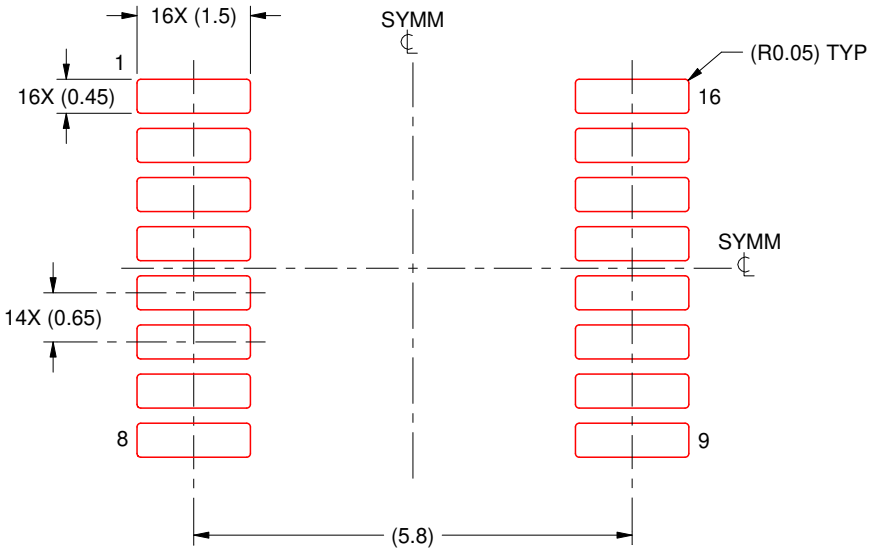

SOLDER PASTE EXAMPLE
BASED ON 0.125 mm THICK STENCIL
SCALE: 10X

4220204/B 12/2023

NOTES: (continued)

8. Laser cutting apertures with trapezoidal walls and rounded corners may offer better paste release. IPC-7525 may have alternate design recommendations.
9. Board assembly site may have different recommendations for stencil design.

N (R–PDIP–T**) PLASTIC DUAL–IN–LINE PACKAGE

16 PINS SHOWN

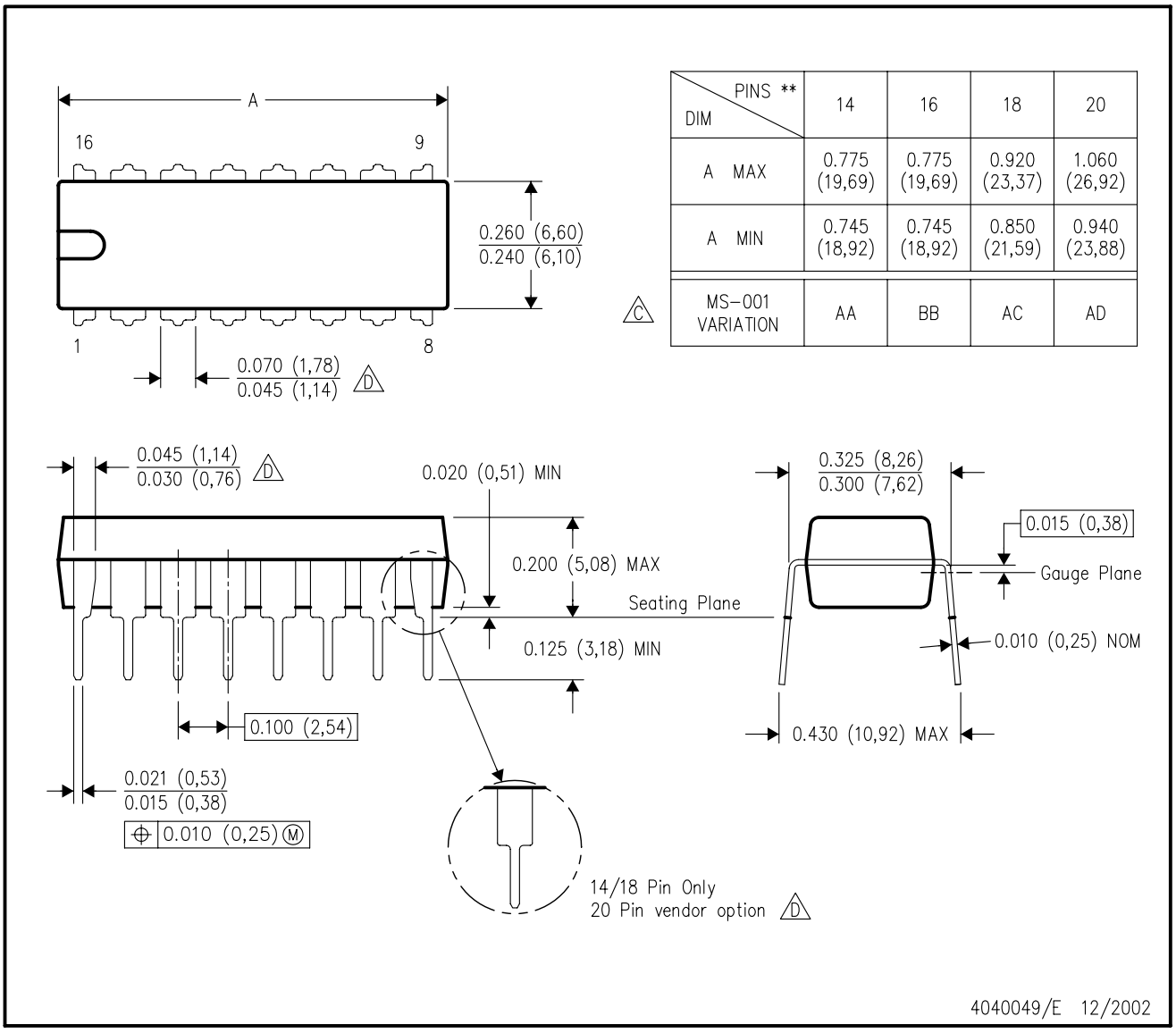

DIM \ PINS **	14	16	18	20
A MAX	0.775 (19,69)	0.775 (19,69)	0.920 (23,37)	1.060 (26,92)
A MIN	0.745 (18,92)	0.745 (18,92)	0.850 (21,59)	0.940 (23,88)
MS–001 VARIATION (C)	AA	BB	AC	AD

NOTES:
A. All linear dimensions are in inches (millimeters).
B. This drawing is subject to change without notice.
C. Falls within JEDEC MS–001, except 18 and 20 pin minimum body length (Dim A).
D. The 20 pin end lead shoulder width is a vendor option, either half or full width.

IMPORTANT NOTICE AND DISCLAIMER

TI PROVIDES TECHNICAL AND RELIABILITY DATA (INCLUDING DATASHEETS), DESIGN RESOURCES (INCLUDING REFERENCE DESIGNS), APPLICATION OR OTHER DESIGN ADVICE, WEB TOOLS, SAFETY INFORMATION, AND OTHER RESOURCES “AS IS” AND WITH ALL FAULTS, AND DISCLAIMS ALL WARRANTIES, EXPRESS AND IMPLIED, INCLUDING WITHOUT LIMITATION ANY IMPLIED WARRANTIES OF MERCHANTABILITY, FITNESS FOR A PARTICULAR PURPOSE OR NON-INFRINGEMENT OF THIRD PARTY INTELLECTUAL PROPERTY RIGHTS.

These resources are intended for skilled developers designing with TI products. You are solely responsible for (1) selecting the appropriate TI products for your application, (2) designing, validating and testing your application, and (3) ensuring your application meets applicable standards, and any other safety, security, regulatory or other requirements.

These resources are subject to change without notice. TI grants you permission to use these resources only for development of an application that uses the TI products described in the resource. Other reproduction and display of these resources is prohibited. No license is granted to any other TI intellectual property right or to any third party intellectual property right. TI disclaims responsibility for, and you fully indemnify TI and its representatives against any claims, damages, costs, losses, and liabilities arising out of your use of these resources.

TI’s products are provided subject to TI’s Terms of Sale, TI’s General Quality Guidelines, or other applicable terms available either on ti.com or provided in conjunction with such TI products. TI’s provision of these resources does not expand or otherwise alter TI’s applicable warranties or warranty disclaimers for TI products. Unless TI explicitly designates a product as custom or customer-specified, TI products are standard, catalog, general purpose devices.

TI objects to and rejects any additional or different terms you may propose.

Copyright © 2026, Texas Instruments Incorporated

Last updated 10/2025