CDCM7005 3.3-V High Performance Clock Synchronizer and Jitter Cleaner

1 Features

- High Performance LVPECL and LVCMOS PLL Clock Synchronizer
- Two Reference Clock Inputs (Primary and Secondary Clock) for Redundancy Support With Manual or Automatic Selection
- Accepts LVCMOS Input Frequencies up to 200 MHz
- VCXO_IN Clock is Synchronized to One of the Two Reference Clocks
- VCXO_IN Frequencies Up to 2.2 GHz (LVPECL)
- Outputs Can Be a Combination of LVPECL and LVCMOS (Up to Five Differential LVPECL Outputs or up to 10 LVCMOS Outputs)
- Output Frequency is Selectable by ×1, /2, /3, /4, /6, /8, /16 on Each Output Individually
- Efficient Jitter Cleaning From Low PLL Loop Bandwidth
- Low Phase Noise PLL Core
- Programmable Phase Offset (PRI_REF and SEC_REF to Outputs)
- Wide Charge Pump Current Range From 200 μA to 3 mA
- Dedicated Charge Pump Supply (VCC_CP) for Wide Tuning Voltage Range VCOs
- Presets Charge Pump to VCC_CP/2 for Fast Center-Frequency Setting of VC(X)O
- Analog and Digital PLL Lock Indication
- Provides VBB Bias Voltage Output for Single-Ended Input Signals (VCXO_IN)
- Frequency Hold-Over Mode Improves Fail-Safe Operation
- Power-up Control Forces LVPECL Outputs to 3-State at V_{CC} < 1.5 V
- SPI Controllable Device Setting
- 3.3-V Power Supply
- Packaged in 64-Pin BGA (0.8 mm Pitch – ZVA) or 48-Pin QFN (RGZ)
- Industrial Temperature Range –40°C to 85°C

2 Applications

- Wireless Infrastructure
- SONET
- Data Communication
- Test Equipment

3 Description

The CDCM7005 is a high-performance, low phase noise and low skew clock synchronizer that synchronizes a VCXO (voltage controlled crystal oscillator) or VCO (voltage controlled oscillator) frequency to one of the two reference clocks. The programmable pre-divider M and the feedback-dividers N and P give a high flexibility to the frequency ratio of the reference clock to VC(X)O

VC(X)O_IN clock operates up to 2.2 GHz. Through the selection of external VC(X)O and loop filter components, the PLL loop bandwidth and damping factor can be adjust to meet different system requirements.

The CDCM7005 can lock to one of two reference clock inputs (PRI_REF and SEC_REF), supports frequency hold-over mode and fast-frequency-locking for fail-safe and increased system redundancy. The outputs of the CDCM7005 are user definable and can be any combination of up to five LVPECL outputs or up to 10 LVCMOS outputs. The built in synchronization latches ensure that all outputs are synchronized for low output skew.

Device Information(1)

PART NUMBER	PACKAGE	BODY SIZE (NOM)
CDCM7005	VQFN (48)	7.00 mm × 7.00 mm
	BGA (64)	8.00 mm × 8.00 mm

(1) For all available packages, see the orderable addendum at the end of the data sheet.

Typical Application Schematic

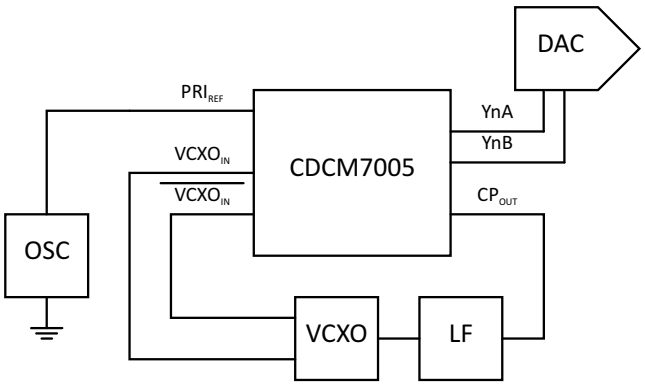

An IMPORTANT NOTICE at the end of this data sheet addresses availability, warranty, changes, use in safety-critical applications, intellectual property matters and other important disclaimers. PRODUCTION DATA.

Table of Contents

1 **Features** ... 1
2 **Applications** ... 1
3 **Description** ... 1
4 **Revision History** ... 2
5 **Description (continued)** ... 4
6 **Pin Configuration and Functions** ... 4
7 **Specifications** ... 7
7.1 Absolute Maximum Ratings ... 7
7.2 ESD Ratings ... 7
7.3 Recommended Operating Conditions ... 7
7.4 Thermal Information ... 8
7.5 Electrical Characteristics ... 8
7.6 Timing Requirements ... 10
7.7 Typical Characteristics ... 11
8 **Parameter Measurement Information** ... 12
9 **Detailed Description** ... 15
9.1 Overview ... 15
9.2 Functional Block Diagram ... 16
9.3 Feature Description ... 16
9.4 Device Functional Modes ... 24
9.5 Programming ... 25
10 **Application and Implementation** ... 34
10.1 Application Information ... 34
10.2 Typical Application ... 37
11 **Power Supply Recommendations** ... 40
12 **Layout** ... 40
12.1 Layout Guidelines ... 40
12.2 Layout Example ... 41
13 **Device and Documentation Support** ... 43
13.1 Receiving Notification of Documentation Updates 43
13.2 Community Resources ... 43
13.3 Trademarks ... 43
13.4 Electrostatic Discharge Caution ... 43
13.5 Glossary ... 43
14 **Mechanical, Packaging, and Orderable Information** ... 43

4 Revision History

NOTE: Page numbers for previous revisions may differ from page numbers in the current version.

Changes from Revision F (July 2015) to Revision G	Page
• Removed duplicate row: PRI_SEC_CLK.	5
• Changed text from: "STATUS_REF or" to: "STATUS_REF or PRI_SEC_CLK".	6

Changes from Revision E (February 2013) to Revision F	Page
• Added *Pin Configuration and Functions* section, *ESD Ratings* table, *Feature Description* section, *Device Functional Modes*, *Application and Implementation* section, *Power Supply Recommendations* section, *Layout* section, *Device and Documentation Support* section, and *Mechanical, Packaging, and Orderable Information* section	1

Changes from Revision D (August 2009) to Revision E	Page
• Changed PLL_LOCK pin description, replaced cycle-slip text.	5
• Changed the Frequency Hold-Over Mode section	22
• Changed text From: Cycle-Slip To: Frequency Offset in Figure 21	23
• Changed Note 1 of table Word 3	29
• Changed table Word 3, Cycle Slip (Bit 6) To: Frequency Offset	29
• Changed table Lock-Detect Window (Word 3) - Clip slip To: Frequency offset, and Note 2	32

Changes from Revision C (December 2007) to Revision D	Page
• Added text to the CTRL_CLK pin - Unused or floating inputs must be tied to proper logic level. A 20kΩ or larger pull−up resistor to VCC is recommended.	4
• Added text to the CTRL_DATA pin - Unused or floating inputs must be tied to proper logic level. A 20kΩ or larger pull−up resistor to VCC is recommended.	4
• Added text to the CTRL_LE pin - Unused or floating inputs must be tied to proper logic level. A 20kΩ or larger pull−up resistor to VCC is recommended.	4
• Added text to the $\overline{PD}$ pin - It is recommended to ramp up the $\overline{PD}$ with the same time as V_{CC} and AV_{CC} or later. The	

Copyright © 2005–2017, Texas Instruments Incorporated

ramp up rate of the $\overline{PD}$ should not be faster than the ramp up rate of V_{CC} and AV_{CC}. 5
- Changed VCC pin text From: 3.3-V supply. There is no internal connection between V_{CC} and AV_{CC}. It is recommended that AV_{CC} use its own supply filter. To: 3.3-V supply. V_{CC} and AV_{CC} should always have the same supply voltage. It is recommended that AV_{CC} use its own supply filter. 6
- Added text to the SPI CONTROL INTERFACE section - Unused or floating inputs must be tied to proper logic level. A 20kΩ or larger pull−up resistor to VCC is recommended. 25
- Added text to the SPI CONTROL INTERFACE section - It is recommended to program Word 0, Word 1, Word 2 and Word 3 right after power up and $\overline{PD}$ becomes HIGH. 25
- Changed From: RES To: GTME 29
- Changed From: RES To: PFDFC 29

Changes from Revision B (October 2005) to Revision C — **Page**

- Changed N2, From: 1 To: 0 30
- Changed N3, From: 1 To: 0 30
- Changed N3, From: 1 To: 0 30
- Changed N2, From: 1 To: 0 30

Changes from Revision A (June 2005) to Revision B — **Page**

- Added minor updates. 1

Changes from Original (June 2005) to Revision A — **Page**

- Changed data sheet from Product Preview to Production data. 1

5 Description (continued)

All device settings, like outputs signaling, divider value, and input selection are programmable by SPI (3-wire serial peripheral interface). SPI allows individually control of the device settings.

The device operates in 3.3-V environment and is characterized for operation from –40°C to 85°C.

6 Pin Configuration and Functions

RGZ Package
48-Pin VQFN
Top View

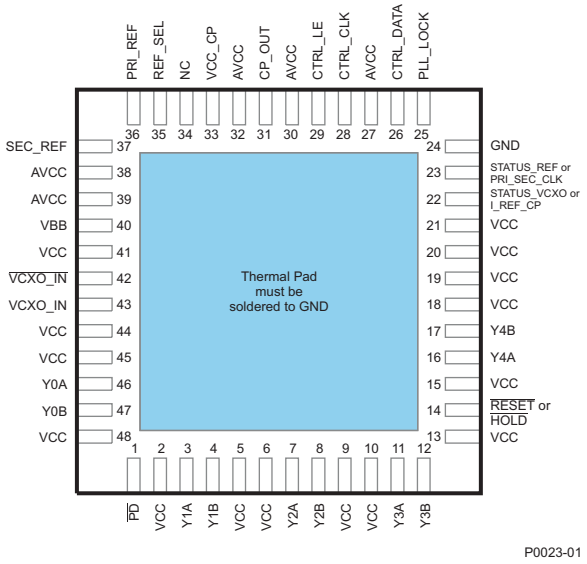

ZVA Package
64-Pin BGA
Top View

	1	2	3	4	5	6	7	8
A	PRI_REF	REF_SEL	VCC_CP	CP_OUT	CTRL_LE	CTRL_CLK	CTRL_DATA	PLL_LOCK
B	SEC_REF	GND	GND	GND	GND	GND	GND	GND
C	VBB	GND	AVCC	AVCC	AVCC	AVCC	AVCC	STATUS_REF or PRI_SEC_CLK
D	VCXO_IN	GND	GND	GND	GND	GND	VCC	STATUS_VCXO or I_REF_CP
E	VCXO_IN	GND	VCC	VCC	VCC	VCC	VCC	VCC
F	Y0A	GND	GND	GND	GND	GND	VCC	Y4B
G	Y0B	VCC	VCC	VCC	VCC	VCC	VCC	Y4A
H	PD	Y1A	Y1B	Y2A	Y2B	Y3A	Y3B	RESET or HOLD

P0022-01

Pin Functions

PIN			I/O	DESCRIPTION
NAME	BGA	QFN		
AVCC	C3, C4, C5, C6, C7	27, 30, 32, 38, 39	Analog Power	3.3-V analog power supply. There is no internal connection between AV_{CC} and V_{CC}. It is recommended that AV_{CC} use its own supply filter.
CP_OUT	A4	31	O	Charge pump output
CTRL_CLK	A6	28	I	LVCMOS input, serial control clock input for SPI, with hysteresis. Unused or floating inputs must be tied to proper logic level. A 20kΩ or larger pull−up resistor to VCC is recommended.
CTRL_DATA	A7	26	I	LVCMOS input, serial control data input for SPI, with hysteresis. Unused or floating inputs must be tied to proper logic level. A 20kΩ or larger pull−up resistor to VCC is recommended.
CTRL_LE	A5	29	I	LVCMOS input, control latch enable for serial programmable Interface (SPI), with hysteresis. Unused or floating inputs must be tied to proper logic level. A 20kΩ or larger pull−up resistor to VCC is recommended.
GND	B2, B3, B4, B5, B6, B7, B8, C2, D2, D3, D4, D5, D6, E2, F2, F3, F4, F5, F6	Thermal pad and pin 24	Ground	Ground

Copyright © 2005–2017, Texas Instruments Incorporated

Pin Functions (continued)

PIN			I/O	DESCRIPTION
NAME	BGA	QFN		
$\overline{\text{HOLD}}$	H8	14	I	This LVCMOS input can be programmed (SPI) to act as $\overline{\text{HOLD}}$ or $\overline{\text{RESET}}$. $\overline{\text{RESET}}$ is the default function. This pin is low active and can be activated external or via the corresponding bit in the SPI register. In case of $\overline{\text{RESET}}$, the charge pump (CP) is switched to 3-state and all counters (N, M, P) are reset to zero (the initial divider settings are maintained in SPI registers). The LVPECL outputs are static low and high respectively and the LVCMOS outputs are all low or high if inverted. $\overline{\text{RESET}}$ is not edge triggered and should have a pulse duration of at least 5 ns.
				In case of $\overline{\text{HOLD}}$, the CP is switched in to 3-state mode only. After $\overline{\text{HOLD}}$ is released and with the next valid reference clock cycle the charge pump is switched back in to normal operation (CP stays in 3-state as long as no reference clock is valid). During $\overline{\text{HOLD}}$, the P divider and all outputs Yx are at normal operation. This mode allows an external control of the frequency hold-over mode.
				The input has an internal 150-kΩ pullup resistor.
I_REF_CP	D8	22	O	This LVCMOS output can be programmed (SPI) to provide either the STATUS_VCXO information or serve as current path for the charge pump (CP). STATUS_VCXO is the default setting.
				In case of STATUS_VCXO, the LVCMOS output provides the status of the VCXO input (frequencies above 2 MHz are interpreted as valid clock; active high).
				In case of I_REF_CP, it provides the current path for the external reference resistor (12 kΩ ±1%) to support an accurate charge pump current, optional. Do not use any capacitor across this resistor to prevent noise coupling via this node. If the internal 12 kΩ is selected (default setting), this pin can be left open.
$\overline{\text{PD}}$	H1	1	I	LVCMOS input, asynchronous power down ($\overline{\text{PD}}$) signal. This pin is low active and can be activated external or by the corresponding bit in the SPI register (in case of logic high, the SPI setting is valid). Switches the device into power-down mode. Resets M- and N-Divider, 3-states charge pump, STATUS_REF, or PRI_SEC_CLK pin, STATUS_VCXO or I_REF_CP pin, PLL_LOCK pin, VBB pin and all Yx outputs. Sets the SPI register to default value; has internal 150-kΩ pullup resistor. It is recommended to ramp up the $\overline{\text{PD}}$ with the same time as V_{CC} and AV_{CC} or later. The ramp up rate of the $\overline{\text{PD}}$ should not be faster than the ramp up rate of V_{CC} and AV_{CC}.
PLL_LOCK	A8	25	I/O	LVCMOS output for PLL_LOCK information. This pin is set high if the PLL is in lock (see feature description). This output can be programmed to be digital lock detect or analog lock detect (see feature description).
				The PLL is locked (set high), if the rising edge either of PRI_REF or SEC_REF clock and VCXO_IN clock at the phase frequency detector (PFD) are inside the lock detect window for a predetermined number of successive clock cycles.
				The PLL is out-of-lock (set low), if the rising edge of either the PRI_REF or SEC_REF) clock and VCXO_IN clock at the PFD are outside the lock detect window or if a certain frequency offset between reference frequency and feedback frequency (VCXO) is detected.
				Both, the lock detect window and the number of successive clock cycles are user definable (via SPI).
PRI_REF	A1	36	I	LVCMOS input for the primary reference clock, with an internal 150-kΩ pullup resistor and input hysteresis.
REF_SEL	A2	35	I	LVCMOS reference clock selection input. In the manual mode the REF_SEL signal selects one of the two input clocks: REF_SEL [1]: PRI_REF is selected; REF_SEL [0]: SEC_REF is selected; The input has an internal 150-kΩ pullup resistor.

Copyright © 2005–2017, Texas Instruments Incorporated

Pin Functions (continued)

PIN			I/O	DESCRIPTION
NAME	BGA	QFN		
$\overline{\text{RESET}}$	H8	14	I	This LVCMOS input can be programmed (SPI) to act as $\overline{\text{HOLD}}$ or $\overline{\text{RESET}}$. $\overline{\text{RESET}}$ is the default function. This pin is low active and can be activated external or via the corresponding bit in the SPI register. In case of $\overline{\text{RESET}}$, the charge pump (CP) is switched to 3-state and all counters (N, M, P) are reset to zero (the initial divider settings are maintained in SPI registers). The LVPECL outputs are static low and high respectively and the LVCMOS outputs are all low or high if inverted. $\overline{\text{RESET}}$ is not edge triggered and should have a pulse duration of at least 5 ns.
				In case of $\overline{\text{HOLD}}$, the CP is switched in to 3-state mode only. After $\overline{\text{HOLD}}$ is released and with the next valid reference clock cycle the charge pump is switched back in to normal operation (CP stays in 3-state as long as no reference clock is valid). During $\overline{\text{HOLD}}$, the P divider and all outputs Yx are at normal operation. This mode allows an external control of the frequency hold-over mode.
				The input has an internal 150-kΩ pullup resistor.
SEC_REF	B1	37	I	LVCMOS input for the secondary reference clock, with an internal 150-kΩ pullup resistor and input hysteresis.
STATUS_REF or PRI_SEC_CLK	C8	23	O	This output can be programmed (SPI) to provide either the STATUS_REF or PRI_SEC_CLK information. This pin is set high if one of the STATUS conditions is valid. STATUS_REF is the default setting.
				In case of STATUS_REF, the LVCMOS output provides the Status of the Reference Clock. If a reference clock with a frequency above 2 MHz is provided to PRI_REF or SEC_REF STATUS_REF will be set high.
				In case of PRI_SEC_CLK, the LVCMOS output indicates whether the primary clock [high] or the secondary clock [low] is selected.
STATUS_VCXO	D8	22	O	This LVCMOS output can be programmed (SPI) to provide either the STATUS_VCXO information or serve as current path for the charge pump (CP). STATUS_VCXO is the default setting.
				In case of STATUS_VCXO, the LVCMOS output provides the status of the VCXO input (frequencies above 2 MHz are interpreted as valid clock; active high).
				In case of I_REF_CP, it provides the current path for the external reference resistor (12 kΩ ±1%) to support an accurate charge pump current, optional. Do not use any capacitor across this resistor to prevent noise coupling via this node. If the internal 12 kΩ is selected (default setting), this pin can be left open.
VBB	C1	40	O	Bias voltage output to be used to bias unused complementary input $\overline{\text{VCXO_IN}}$ for single ended signals. The output of VBB is V_{CC} – 1.3 V. The output current is limited to about 1.5 mA.
VCC	D7, E3, E4, E5, E6, E7, E8, F7, G2, G3, G4, G5, G6, G7	2, 5, 6, 9, 10, 13, 15, 18, 19, 20, 21, 41, 44, 45; 48	Power	3.3-V supply. V_{CC} and AV_{CC} should always have the same supply voltage. It is recommended that AV_{CC} use its own supply filter.
VCC_CP	A3	33	Power	This is the charge pump power supply pin used to have the same supply as the external VCO. It can be set from 2.3 V to 3.6 V.
VCXO_IN	E1	43	I	VCXO LVPECL input
$\overline{\text{VCXO_IN}}$	D1	42	I	Complementary VCXO LVPECL input
Y0A:Y0B Y1A:Y1B Y2A:Y2B Y3A:Y3B Y4A:Y4B	F1, G1, H2, H3, H4, H5, H6, H7, G8, F8	46, 47, 3, 4, 7, 8, 11,12, 16, 17	O	The outputs of the CDCM7005 are user definable and can be any combination of up to five LVPECL outputs or up to 10 LVCMOS outputs. The outputs are selectable via SPI (Word 1, Bit 2-6). The power-up setting is all outputs are LVPECL.

Copyright © 2005–2017, Texas Instruments Incorporated

7 Specifications

7.1 Absolute Maximum Ratings

over operating free-air temperature range (unless otherwise noted)[1]

		MIN	MAX	UNIT
V_{CC}, A_{VCC}, V_{CC_CP}	Supply voltage [2]	–0.5	4.6	V
V_I	Input voltage [3]	–0.5	V_{CC} + 0.5	V
V_O	Output voltage [3]	–0.5	V_{CC} + 0.5	V
I_{OUT}	Output current for LVPECL/LVCMOS outputs ($0 < V_O < V_{CC}$)		±50	mA
I_{IN}	Input current ($V_I < 0$, $V_I > V_{CC}$)		±20	mA
T_J	Maximum junction temperature		125	°C
T_{stg}	Storage temperature	–65	150	°C

(1) Stresses beyond those listed under *Absolute Maximum Ratings* may cause permanent damage to the device. These are stress ratings only, and functional operation of the device at these or any other conditions beyond those indicated under *Recommended Operating Conditions* is not implied. Exposure to absolute–maximum–rated conditions for extended periods may affect device reliability.
(2) All supply voltages have to be supplied at the same time.
(3) The input and output negative voltage ratings may be exceeded if the input and output clamp-current ratings are observed.

7.2 ESD Ratings

			VALUE	UNIT
$V_{(ESD)}$	Electrostatic discharge	Human body model (HBM), per ANSI/ESDA/JEDEC JS-001[1]	±2500	V
		Charged-device model (CDM), per JEDEC specification JESD22-C101[2]	±1500	

(1) JEDEC document JEP155 states that 500-V HBM allows safe manufacturing with a standard ESD control process.
(2) JEDEC document JEP157 states that 250-V CDM allows safe manufacturing with a standard ESD control process.

7.3 Recommended Operating Conditions

		MIN	NOM	MAX	UNIT
V_{CC}, AV_{CC}	Supply voltage	3	3.3	3.6	V
V_{CC_CP}		2.3		V_{CC}	
V_{IL}	Low-level input voltage LVCMOS, see [1]			0.3 V_{CC}	V
V_{IH}	High-level input voltage LVCMOS, see [1]	0.7 V_{CC}			V
I_{OH}	High-level output current LVCMOS (includes all status pins)			–8	mA
I_{OL}	Low-level output current LVCMOS (includes all status pins)			8	mA
V_I	Input voltage range LVCMOS	0		3.6	V
V_{INPP}	Input amplitude LVPECL ($V_{VCXO_IN} – V_{\overline{VCXO_IN}}$)[2]	0.5		1.3	V
V_{IC}	Common-mode input voltage LVPECL	1		V_{CC}–0.3	V
T_A	Operating free-air temperature	–40		85	°C

(1) V_{IL} and V_{IH} are required to maintain ac specifications; the actual device function tolerates a smaller input level of 1V, if an ac-coupling to $V_{CC}/2$ is provided.
(2) V_{INPP} minimum and maximum is required to maintain ac specifications; the actual device function tolerates at a minimum V_{INPP} of 150 mV.

Copyright © 2005–2017, Texas Instruments Incorporated

7.4 Thermal Information

THERMAL METRIC[1]		RGZ AIRFLOW (lfm)	ZVA AIRFLOW (m/s)	CDCM7005 RGZ (VQFN) 48 PINS	CDCM7005 ZVA (BGA) 64 PINS	UNIT
$R_{\theta JA}$	Junction-to-ambient thermal resistance	0	0	29.9	53.9	°C/W
		150	1	24.7	49.8	
		250	2	23.2	48.5	
		500	–	21.5	–	
$R_{\theta JC(top)}$	Junction-to-case (top) thermal resistance			22.4	28.3	°C/W
$R_{\theta JB}$	Junction-to-board thermal resistance			14.2	38.6	°C/W
ψ_{JT}	Junction-to-top characterization parameter	0	0	0.2	0.7	°C/W
		150	1	0.2	0.7	
		250	2	0.2	0.8	
		500	–	0.3	–	
ψ_{JB}	Junction-to-board characterization parameter			–	–	°C/W
$R_{\theta JC(bot)}$	Junction-to-case (bottom) thermal resistance					°C/W

(1) For more information about traditional and new thermal metrics, see the *Semiconductor and IC Package Thermal Metrics* application report.

7.5 Electrical Characteristics

over recommended operating free-air temperature range (unless otherwise noted)

PARAMETER		TEST CONDITIONS	MIN	TYP[1]	MAX	UNIT
OVERALL						
I_{CC_LVPECL}	Supply current (I_{CC} over frequency see Figure 1 through Figure 4)	f_{VCXO} = 245.76 MHz, f_{REF_IN} = 30.72 MHz, PFD = 240 kHz, I_{CP} = 2 mA, all outputs are LVPECL and Div-by-8 (load, see Figure 13)		210	260	mA
I_{CC_LVCMOS}		f_{VCXO} = 245.76 MHz, f_{REF_IN} = 30.72 MHz, PFD = 240 kHz, I_{CP} = 2 mA, All outputs are LVCMOS and Div-by-8 (load, 10 pF)		120	150	mA
I_{CCPD}	Power-down current	f_{IN} = 0 MHz, V_{CC} = 3.6 V, AV_{CC} = 3.6 V, V_{CC_CP} = 3.6 V, V_I = 0 V or V_{CC}		100	300	µA
I_{OZ}	High-impedance state output current for Yx outputs	V_O = 0 V or V_{CC} – 0.8 V			±40	µA
		V_O = 0 V or V_{CC}			±100	µA
$V_{I_REF_CP}$	Voltage on I_REF_CP (external current path for accurate charge pump current)	12 kΩ to GND at pin D8 (BGA), pin 22 (QFN)		1.21		V
V_{BB}	Output reference voltage	V_{CC} = 3 V – 3.6 V; I_{BB} = –0.2 mA		V_{CC}–1.3		V
C_O	Output capacitance for Yx	V_{CC} = 3.3 V, V_O = 0 V or V_{CC}		2		pF
C_I	Input capacitance at PRI_REF and SEC_REF	V_I = 0 V or V_{CC}, V_I = 0 V or V_{CC}		2.7		pF
	Input capacitance at CTRL_LE, CTRL_CLOCK, CTRL_DATA	V_I = 0 V or V_{CC}		2		
LVCMOS						
f_{clk}	Output frequency, see [2], [3], Figure 6, and Figure 7	Load = 5 pF to GND, 1 kΩ to V_{CC}, 1 kΩ to GND			250	MHz
V_{IK}	LVCMOS input clamp voltage	V_{CC} = 3 V, I_I = –18 mA			–1.2	V
I_I	LVCMOS input current for CTRL_LE, CTRL_CLK, CTRL_DATA	V_I = 0 V or V_{CC}, V_{CC} = 3.6 V			±5	µA

(1) All typical values are at V_{CC} = 3.3 V, temperature = 25°C.
(2) f_{clk} can be up to 400 MHz in the typical operating mode (25°C / 3.3-V V_{CC}). The total power consumption limit of 700 mW for the BGA package can be violated if several LVCMOS outputs switch at high frequency (see Figure 3 and Figure 4).
(3) Operating the LVCMOS or LVPECL output above the maximum frequency will not cause a malfunction to the device, but the output signal swing may no longer meet the output specification.

Copyright © 2005–2017, Texas Instruments Incorporated

Electrical Characteristics (continued)

over recommended operating free-air temperature range (unless otherwise noted)

PARAMETER		TEST CONDITIONS	MIN	TYP(1)	MAX	UNIT
I_{IH}	LVCMOS input current for $\overline{PD}$, $\overline{RESET}$, $\overline{HOLD}$, REF_SEL, PRI_REF, SEC_REF, (see (4))	$V_I = V_{CC}$, V_{CC} = 3.6 V			5	µA
I_{IL}	LVCMOS input current for $\overline{PD}$, $\overline{RESET}$, $\overline{HOLD}$, REF_SEL, PRI_REF, SEC_REF, (see (4))	V_I = 0 V, V_{CC} = 3.6 V	–15		–35	µA
V_{OH}	High-level output voltage for LVCMOS outputs	V_{CC} = min to max, I_{OH} = –100 µA	V_{CC}–0.1			V
		V_{CC} = 3 V, I_{OH} = –6 mA	2.4			
		V_{CC} = 3 V, I_{OH} = –12 mA	2			
V_{OL}	Low-level output voltage for LVCMOS outputs	V_{CC} = min to max, I_{OL} = 100 µA			0.1	V
		V_{CC} = 3 V, I_{OL} = 6 mA			0.5	
		V_{CC} = 3 V, I_{OL} = 12 mA			0.8	
I_{OH}	High-level output current	V_{CC} = 3.3 V, V_O = 1.65 V		–30		mA
I_{OL}	Low-level output current	V_{CC} = 3.3 V, V_O = 1.65 V		33		mA
tpho	Phase offset (REF_IN to Y output) (5)	VREF_IN = V_{CC}/2, Y = V_{CC}/2, see Figure 11, Load = 10 pF		1.8		ns
$t_{sk(p)}$	LVCMOS pulse skew, see Figure 10	Crosspoint to V_{CC}/2 load, see Figure 12			150	ps
$t_{pd(LH)}$ / $t_{pd(HL)}$	Propagation delay from VCXO_IN to Yx, see Figure 10	Crosspoint to V_{CC}/2, Load = 10 pF, see Figure 12 (PLL bypass mode)	2	2.5	3	ns
$t_{sk(o)}$	LVCMOS single-ended output skew, see (6) and Figure 10	All outputs have the same divider ratio			55	ps
		Outputs have different divider ratios			70	
Duty cycle	LVCMOS	V_{CC}/2 to V_{CC}/2	49%		51%	
$t_{slew-rate}$	Output rise/fall slew rate	20% to 80% of swing (load see Figure 12)	2.4	3.5		V/ns
LVPECL						
f_{clk}	Output frequency, see (3) and Figure 5	Load, see Figure 13	0		1500	MHz
I_I	LVPECL input current	V_I = 0 V or V_{CC}			±20	µA
V_{OH}	LVPECL high-level output voltage	Load, See Figure 13	V_{CC}–1.18		V_{CC}–0.81	V
V_{OL}	LVPECL low-level output voltage	Load, See Figure 13	V_{CC}–2		V_{CC}–1.55	V
$\|V_{OD}\|$	Differential output voltage	See Figure 9 and load, see Figure 13	500			mV
t_{pho}	Phase offset (REF_IN to Y output) (6)	VREF_IN = V_{CC}/2 to cross point of Y, see Figure 11	–200		100	ps
$t_{pd(LH)}$ / $t_{pd(HL)}$	Propagation delay time, VCXO_IN to Yx, see Figure 10	Cross point-to-cross point, load see Figure 13	340	490	640	ps
$t_{sk(p)}$	LVPECL pulse skew, see Figure 10	Cross point-to-cross point, load see Figure 13			10	ps
$t_{sk(o)}$	LVPECL output skew (6)	Load see Figure 13, all outputs have the same divider ratio			20	ps
		Load see Figure 13, outputs have different divider ratios			50	
t_r / t_f	Rise and fall time	20% to 80% of V_{OUTPP}, see Figure 9	120	170	220	ps
C_I	Input capacitance at VCXO_IN, $\overline{VCXO_IN}$			1.5		pF
LVCMOS-TO-LVPECL						
$t_{sk(P_C)}$	Output skew between LVCMOS and LVPECL outputs, see (7) and Figure 10	Cross point to V_{CC}/2; load, see Figure 12 and Figure 13	1.7	2	2.4	ns
PLL ANALOG LOCK						
I_{OH}	High-level output current	V_{CC} = 3.6 V, V_O = 1.8 V		–110		µA
I_{OL}	Low-level output current	V_{CC} = 3.6 V, V_O = 1.8 V		110		µA

(4) These inputs have an internal 150-kΩ pullup resistor.
(5) This is valid only for the same frequency of REF_IN clock and Y output clock. It can be adjusted by the SPI controller (reference delay M and VCXO delay N).
(6) The $t_{sk(o)}$ specification is only valid for equal loading of all outputs.
(7) The phase of LVCMOS is lagging in reference to the phase of LVPECL.

Copyright © 2005–2017, Texas Instruments Incorporated

Electrical Characteristics (continued)

over recommended operating free-air temperature range (unless otherwise noted)

PARAMETER		TEST CONDITIONS	MIN	TYP(1)	MAX	UNIT
$I_{OZH\ LOCK}$	High-impedance state output current for PLL LOCK output(8)	V_O = 3.6 V ($\overline{PD}$ is set low)		45	65	µA
$I_{OZL\ LOCK}$	High-impedance state output current for PLL LOCK output(8)	V_O = 0 V ($\overline{PD}$ is set low)			±5	µA
V_{IT+}	Positive input threshold voltage	V_{CC} = min to max		V_{CC}×0.55		V
V_{IT-}	Negative input threshold voltage	V_{CC} = min to max		V_{CC}×0.35		V
PHASE DETECTOR						
f_{CPmax}	Maximum charge pump frequency	Default PFD pulse width delay			100	MHz
CHARGE PUMP						
I_{CP}	Charge pump sink/source current range (9)	V_{CP} = 0.5 V_{CC_CP}	±0.2		±3	mA
I_{CP3St}	Charge pump 3-state current	0.5 V < V_{CP} < V_{CC_CP} – 0.5 V			10	nA
I_{CPA}	ICP absolute accuracy	V_{CP} = 0.5 V_{CC_CP}, internal reference resistor, SPI default settings		10%		
		V_{CP} = 0.5 V_{CC_CP}, external reference resistor 12 kΩ (1%) at I_REF_CP, SPI default settings		5%		
I_{CPM}	Sink/source current matching	0.5 V < V_{CP} < V_{CC_CP} – 0.5 V, SPI default settings		2.5%		
I_{VCPM}	ICP vs VCP matching	0.5 V < V_{CP} < V_{CC_CP} – 0.5 V		5%		

(8) Lock output has an 80-kΩ pulldown resistor.
(9) Defined by SPI settings.

7.6 Timing Requirements

over recommended ranges of supply voltage, load and operating free air temperature

		MIN	NOM	MAX	UNIT
PRI_REF/SEC_REF_IN REQUIREMENTS					
f_{REF_IN}	LVCMOS primary or secondary reference clock frequency(1) (2)	0		200	MHz
t_r/ t_f	Rise and fall time of PRI_REF or SEC_REF signals from 20% to 80% of V_{CC}			4	ns
dutyREF	Duty cycle of PRI_REF or SEC_REF at V_{CC}/2	40%		60%	
VCXO_IN, $\overline{\text{VCXO_IN}}$ REQUIREMENTS					
f_{VCXO_IN}	VCXO clock frequency(3)	0		2200	MHz
t_r/ t_f	Rise and fall time 20% to 80% of VINPP at 80 MHz to 800 MHz(4)			3	ns
dutyVCXO	Duty cycle of VCXO clock	40%		60%	
SPI/CONTROL REQUIREMENTS (see Figure 23)					
f_{CTRL_CLK}	CTRL_CLK frequency			20	MHz
t_{su1}	CTRL_DATA to CTRL_CLK setup time	10			ns
t_{h2}	CTRL_DATA to CTRL_CLK hold time	10			ns
t_3	CTRL_CLK high duration	25			ns
t_4	CTRL_CLK low duration	25			ns
t_{su5}	CTRL_LE to CTRL_CLK setup time	10			ns
t_{su6}	CTRL_CLK to CTRL_LE setup time	10			ns
t_7	CTRL_LE pulse width	20			ns
t_r/ t_f	Rise and fall time of CTRL_DATA CTRL_CLK, CTRL_LE from 20% to 80% of V_{CC}			4	ns
$\overline{\text{PD}}$, $\overline{\text{RESET}}$, $\overline{\text{HOLD}}$, REF_SEL REQUIREMENTS					
t_r / t_f	Rise and fall time of the PD, RESET, HOLD, REF_SEL signal from 20% to 80% of V_{CC}			4	ns

(1) At *Reference Clock* less than 2 MHz, the device stays in normal operation mode but the frequency detection circuitry resets the STATUS_REF signal to low. In this case, the status of the STATUS_REF is no longer relevant.
(2) f_{REF_IN} can be up to 250 MHz in typical operating mode (25°C / 3.3-V V_{CC}).
(3) If the *Feedback Clock* (derives from VCXO input) is less than 2 MHz, the device stays in normal operation mode but the frequency detection circuitry resets the STATUS_VCXO signal and PLL_LOCK signal to low. Both status signals are no longer relevant. This effects the HOLD-over function as well, as the PLL_LOCK signal is no longer valid!
(4) Use a square wave for lower frequencies (< 80 MHz).

Copyright © 2005–2017, Texas Instruments Incorporated

7.7 Typical Characteristics

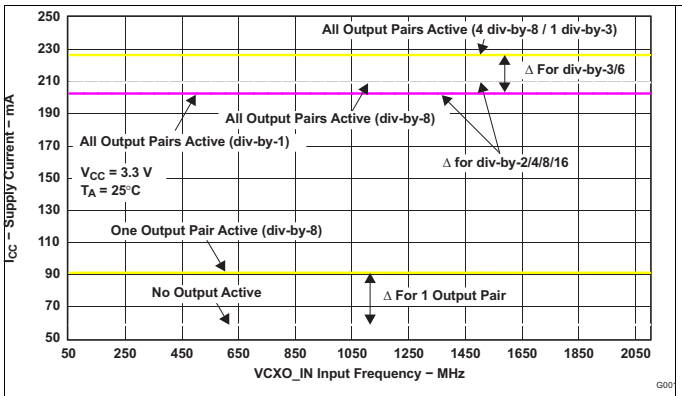

If div-by-2/4/8/16 is activated for one or more outputs, 'Δ for div-by-2/4/8/16' has to be added to I_{CC} of div-by-1. If div-by-3 or div-by-6 is activated, 'Δ for div-by-2/4/8/16' and 'Δ for div-by3/6' has to be added to I_{CC} of div-by-1.

Figure 1. LVPECL Supply Current vs Number of Active Outputs

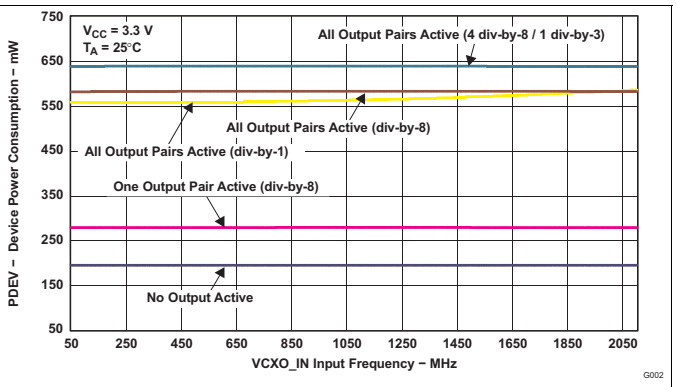

Figure 2. LVPECL Device Power Consumption vs Number of Active Outputs

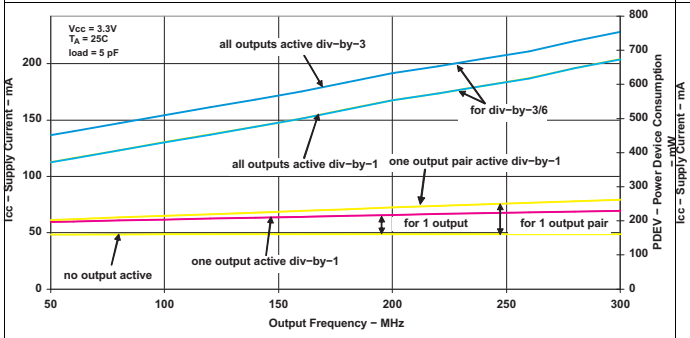

It is not recommended to exceed power dissipation of 700 mW for the BGA package at T_A 85°C.

Figure 3. LVCMOS Supply Current and Device Power Consumption vs Number of Active Outputs (Load = 5 pF)

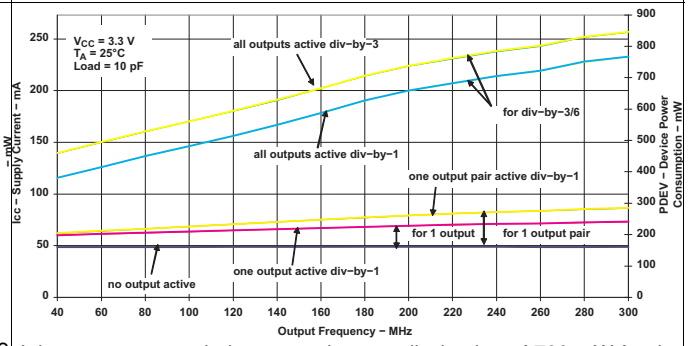

It is not recommended to exceed power dissipation of 700 mW for the BGA package at T_A 85°C.

Figure 4. LVCMOS Supply Current and Device Power Consumption vs Number of Active Outputs (Load = 10 pF)

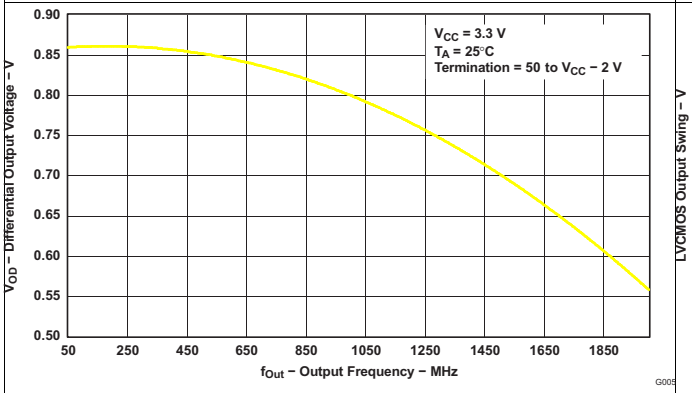

Figure 5. Differential LVPECL Output Voltage vs Output Frequency

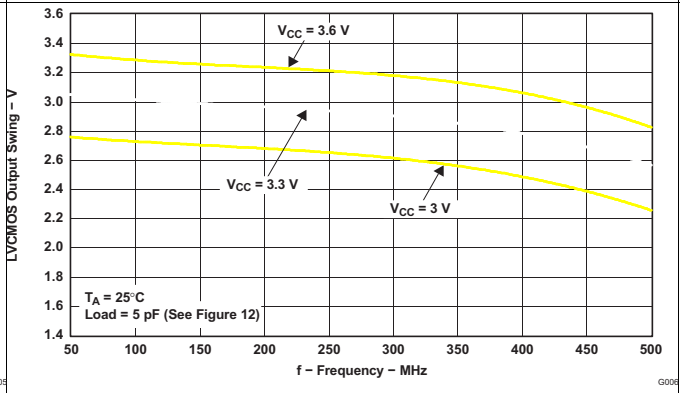

Figure 6. LVCMOS Output Swing vs Frequency

Typical Characteristics (continued)

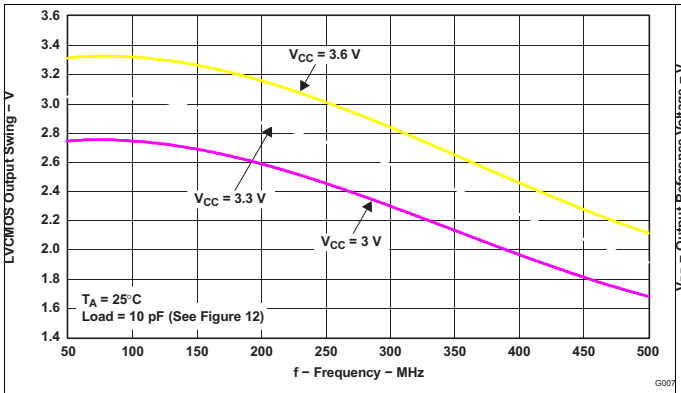

Figure 7. LVCMOS Output Swing vs Frequency

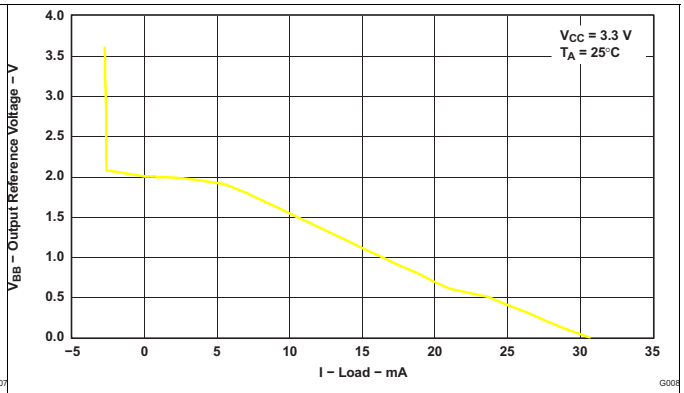

Figure 8. Output Reference Voltage (VBB) vs Load

8 Parameter Measurement Information

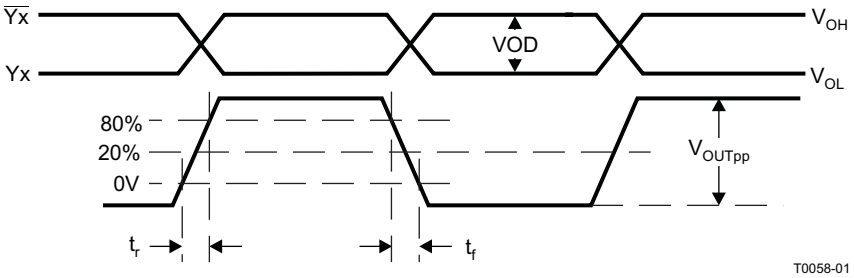

Figure 9. LVPECL Differential Output Voltage and Rise/Fall Time

Copyright © 2005–2017, Texas Instruments Incorporated

Parameter Measurement Information (continued)

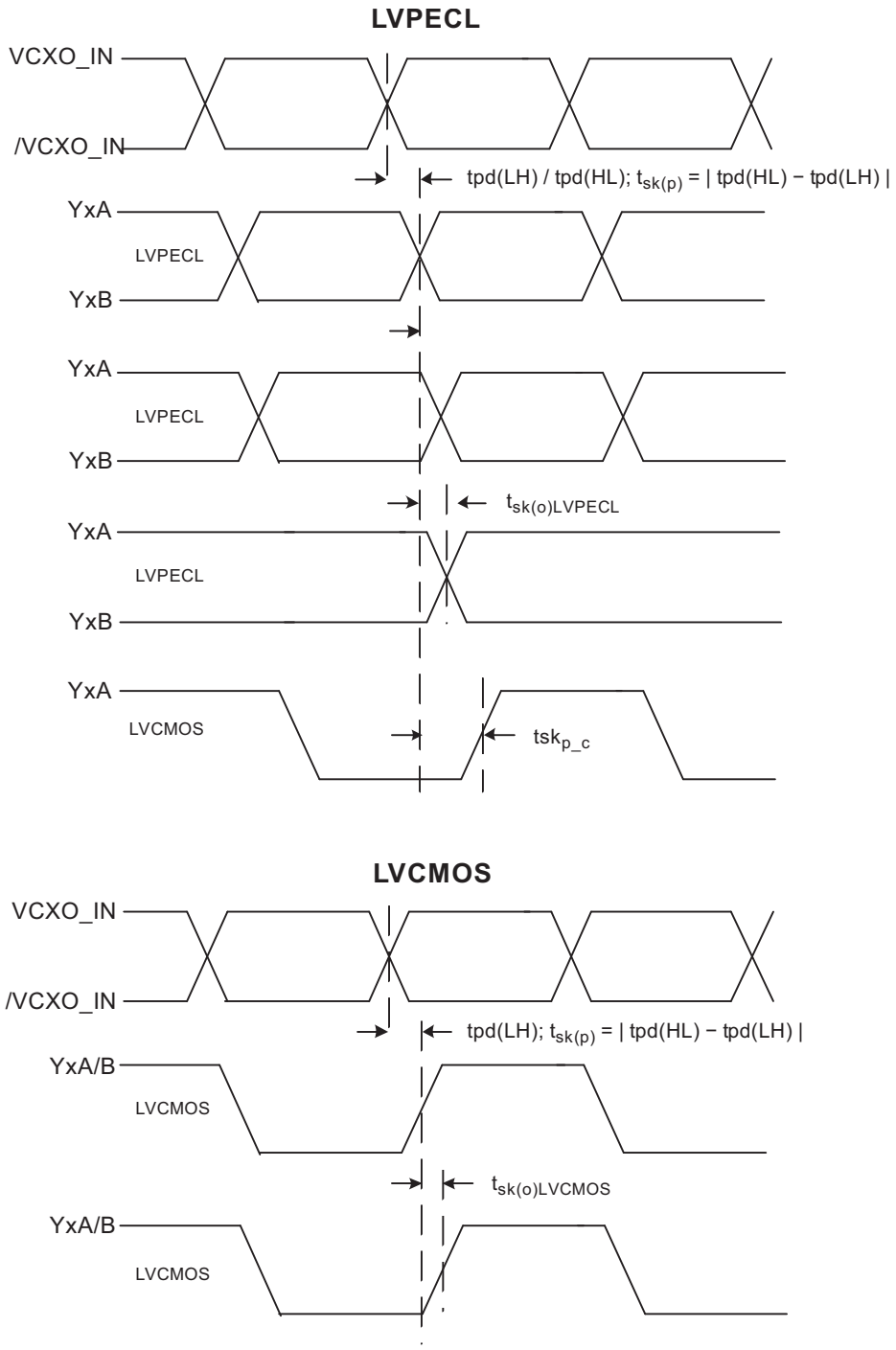

A. Output skew, $t_{sk(o)}$, is calculated as the greater of:
The difference between the fastest and the slowest t_{pd}(LH)n (n = 0...4)
The difference between the fastest and the slowest t_{pd}(HL)n (n = 0...4)

B. Pluse skew, $t_{sk(p)}$, is calculated as the magnitude of the absolute time difference between the high-to-low (t_{pd}(HL)) and the low-to-high (t_{pd}(LH)) propagation delays when a single switching input causes one or more outputs to switch, $t_{sk(p)}$ = |t_{pd}(HL) – t_{pd}(LH) |. Pulse skew is sometimes refered to as *pulse width distortion or duty cycle skew*.

Figure 10. Output Skew

Parameter Measurement Information (continued)

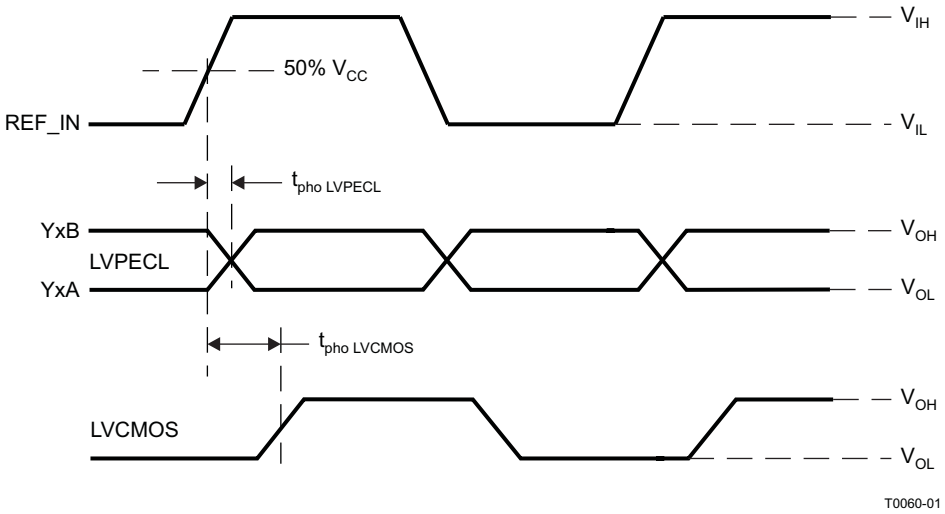

Figure 11. Phase Offset

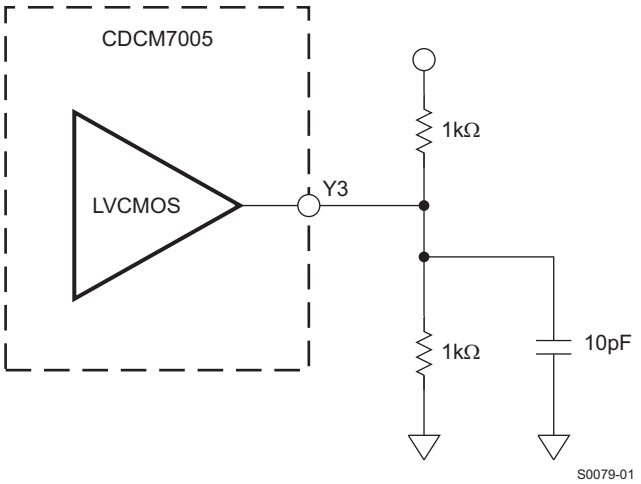

Figure 12. LVCMOS Output Loading During Device Test

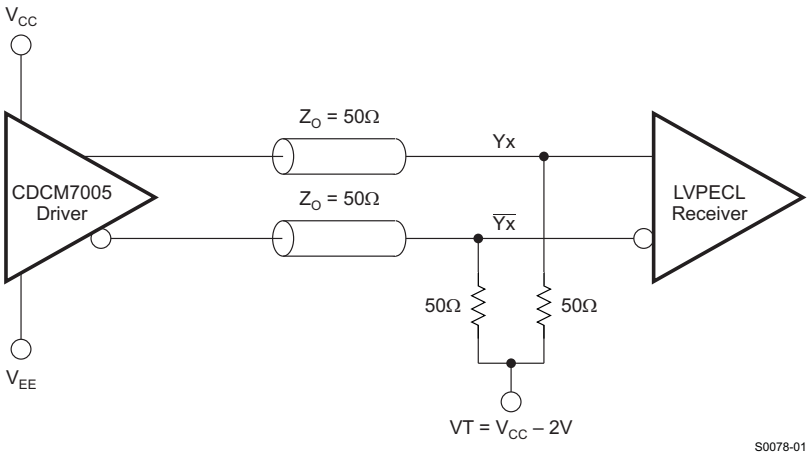

Figure 13. LVPECL Output Loading During Device Test

Copyright © 2005–2017, Texas Instruments Incorporated

9 Detailed Description

9.1 Overview

The CDCM7005 is a high-performance, low phase noise and low skew clock synchronizer that synchronizes a VCXO or VCO frequency to one of the two reference clocks. VC(X)O_IN clock operates up to 2.2 GHz. Through the selection of external VC(X)O and loop filter components, the PLL loop bandwidth and damping factor can be adjust to meet different system requirements.

The CDCM7005 can lock to one of two reference clock inputs (PRI_REF and SEC_REF), supports frequency hold-over mode and fast-frequency-locking for fail-safe and increased system redundancy. The outputs of the CDCM7005 are user definable and can be any combination of up to five LVPECL outputs or up to 10 LVCMOS outputs. The LVCMOS outputs are arranged in pairs (Y0A:Y0B, Y1A:Y1B, …), so that each pair has the same frequency. But each output can be separately inverted and disabled. The built in synchronization latches ensure that all outputs are synchronized for low output skew.

CDCM7005 is programmable through SPI (3-wire serial peripheral interface). SPI allows individually control of the device settings.

The device operates in 3.3-V environment and is characterized for operation from –40°C to 85°C.

9.2 Functional Block Diagram

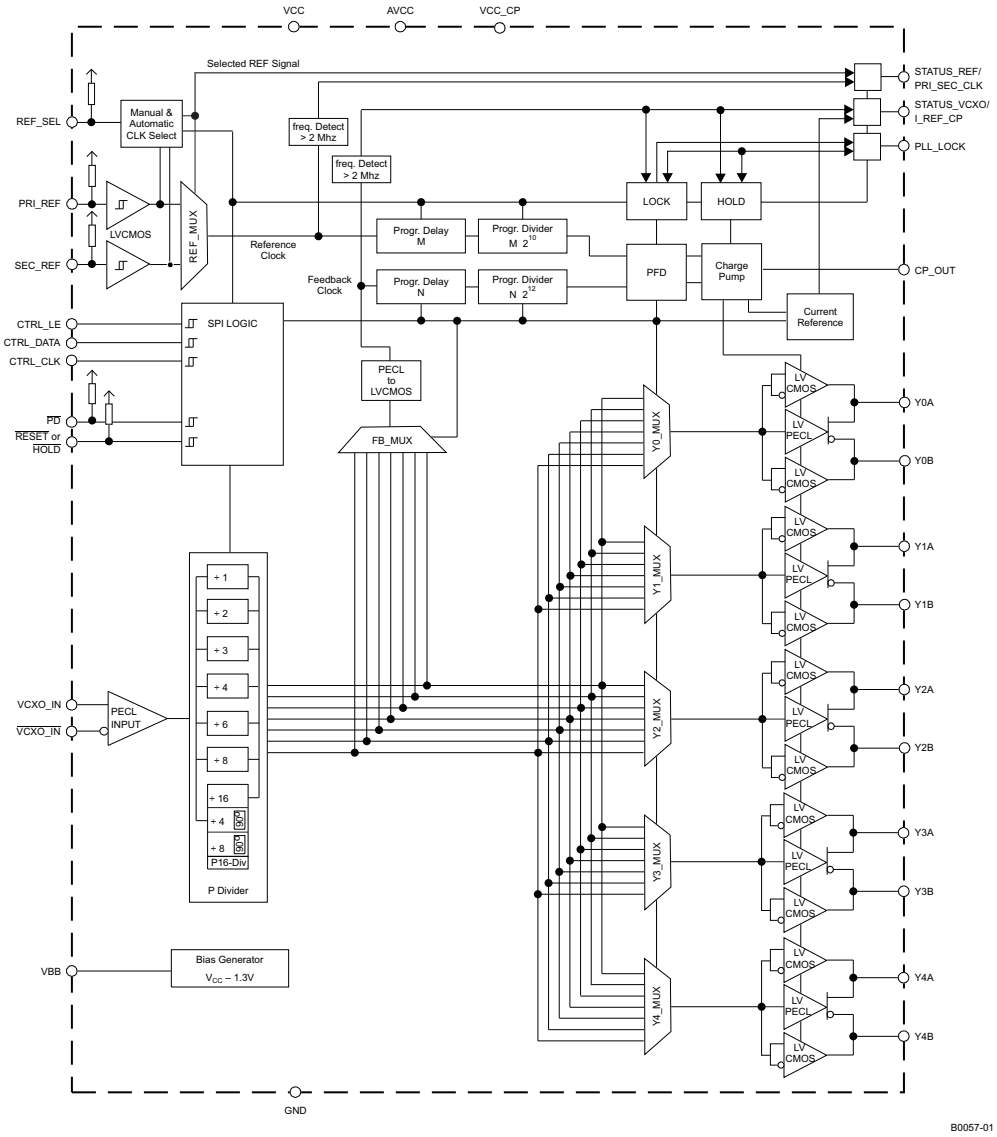

9.3 Feature Description

9.3.1 Automatic/Manual Reference Clock Switching

The CDCM7005 supports two reference clock inputs, the primary clock input, PRI_REF, and the secondary clock input, SEC_REF. The clocks can be selected manually or automatically. The respective mode is selected by the dedicated SPI register bit (Word 0, Bit 30).

In the manual mode, the external REF_SEL signal selects one of the two input clocks:

REF_SEL [1] -> primary clock is selected

REF_SEL [0] -> secondary clock is selected

In the automatic mode, the primary clock is selected by default even if both clocks are available. In case the primary clock is not available or fails, then the input switches to the secondary clock as long until the primary clock is back. Figure 14 shows the automatic clock selection.

Copyright © 2005–2017, Texas Instruments Incorporated

Feature Description (continued)

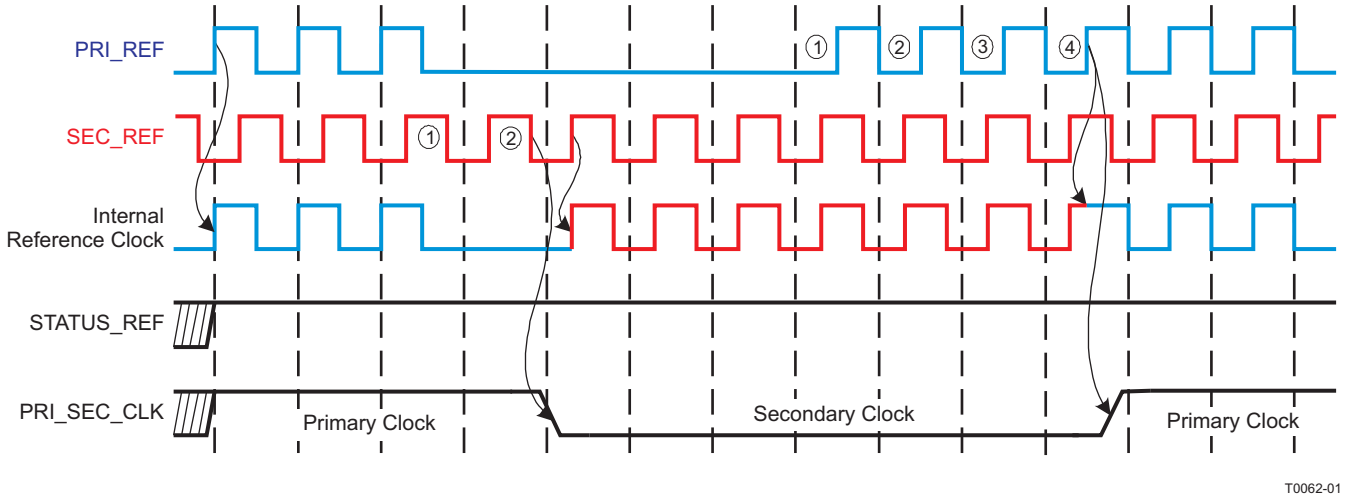

NOTE: PRI_REF is the preferred clock input.

Figure 14. Behavior of STATUS_REF and PRI_SEC_CLK

In the automatic mode, the frequencies of both clock signals have to be similar, but may differ by up to 20%. The phase of the clock signal can be any.

The clock input circuitry is design to suppress glitches during switching between the primary and secondary clock in the manual and automatic mode. This avoids an undefined switching of the following circuitries.

The phase of the output clock slowly follows the new input phase. There will be no phase-jump at the output. How quick the phase adjustment is done depends on the selected loop parameter, i.e., at a loop bandwidth of <100 Hz; the phase adjustment can take several ms. There is no phase build-out function supported (like in SONET/SDH applications).

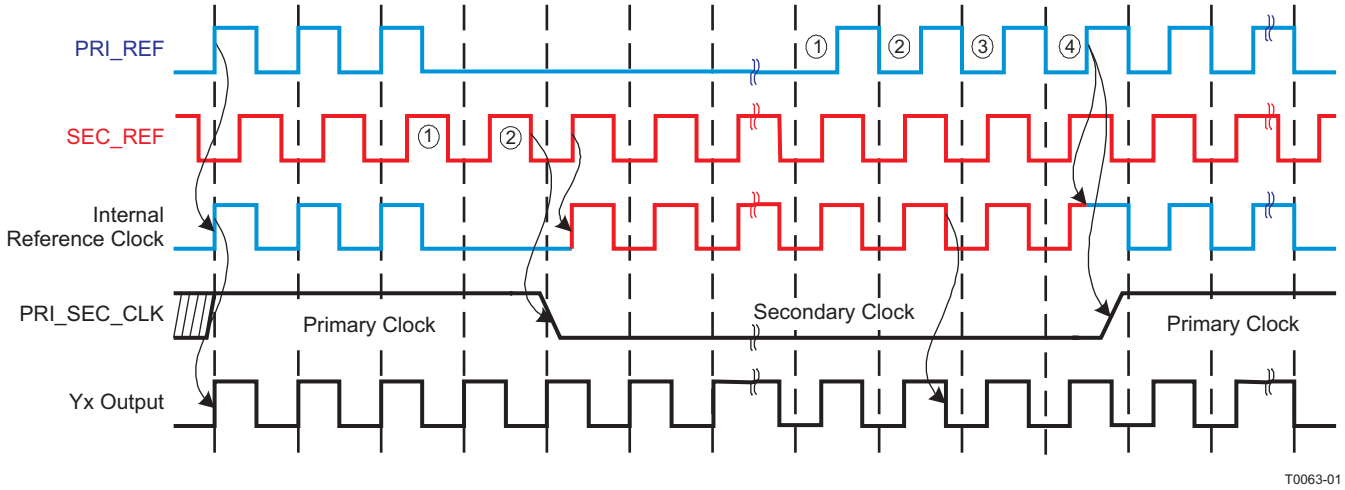

Figure 15. Phase Approach of Output to New Reference Clock

9.3.2 PLL Lock for Analog and Digital Detect

The CDCM7005 supports two PLL lock indications: the digital lock signal or the analog lock signal. Both signals indicate logic high-level at PLL_LOCK if the PLL locks according the selected lock condition.

Feature Description (continued)

9.3.2.1 PLL Lock/Out-of-Lock Definition

The PLL is locked (set high), if the rising edge of the Reference Clock (PRI_REF or SEC_REF clock) and Feedback Clock (VCXO_IN clock) at the PFD (phase frequency detect) are inside a predefined lock detect window, or if no frequency offset appears, for a pre-defined number of successive clock cycles.

The PLL is out-of-lock (set low), if the rising edge of the Reference Clock (PRI_REF or SEC_REF clock) and Feedback Clock (VCXO_IN clock) at the PFD are outside the predefined lock detect window or if a frequency offset appears.

Both, the lock detect window and the number of successive clock cycles are user definable (Word 3, Bit 2-6).

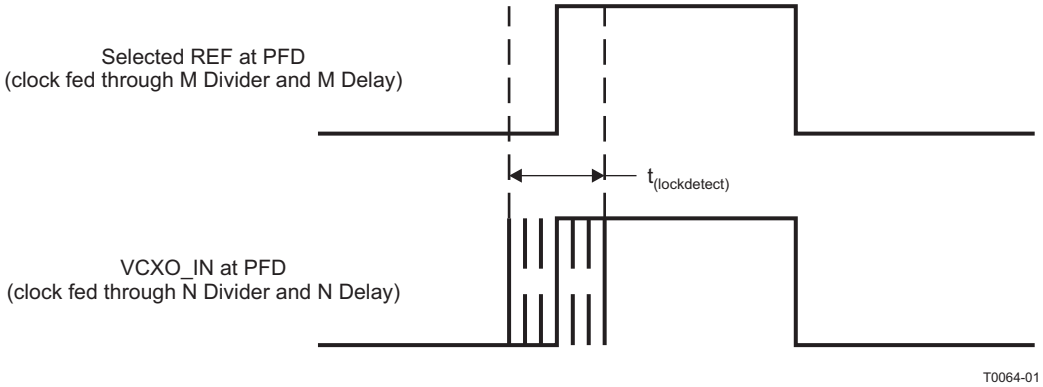

Figure 16. Lock Detect Window

The lock detect window describes the maximum allowed time difference for lock detect between the rising edge of PRI_REF or SEC_REF and VCXO_IN. The time difference is detected at the phase frequency detector. The rising edge of PRI_REF or SEC_REF is taken as reference. The rising edge of VCXO_IN is outside the lock detect window if there is a phase displacement of more than $+0.5 \times t_{(lockdetect)}$ or $-0.5 \times t_{(lockdetect)}$.

Copyright © 2005–2017, Texas Instruments Incorporated

Feature Description (continued)

9.3.2.2 Digital vs Analog Lock

Figure 17 and Figure 18 show the circuit for the digital and analog lock. The analog lock operates with an external load capacitor.

When selecting the digital PLL lock option, PLL_LOCK will possibly jitter several times between lock and out of lock until a stable lock is detected. A single low-to-high step can be reached with a wide lock detect window and high number of successive clock cycles. PLL_LOCK returns to out of lock if just one cycle is outside the lock detect window or a frequency offset occurs.

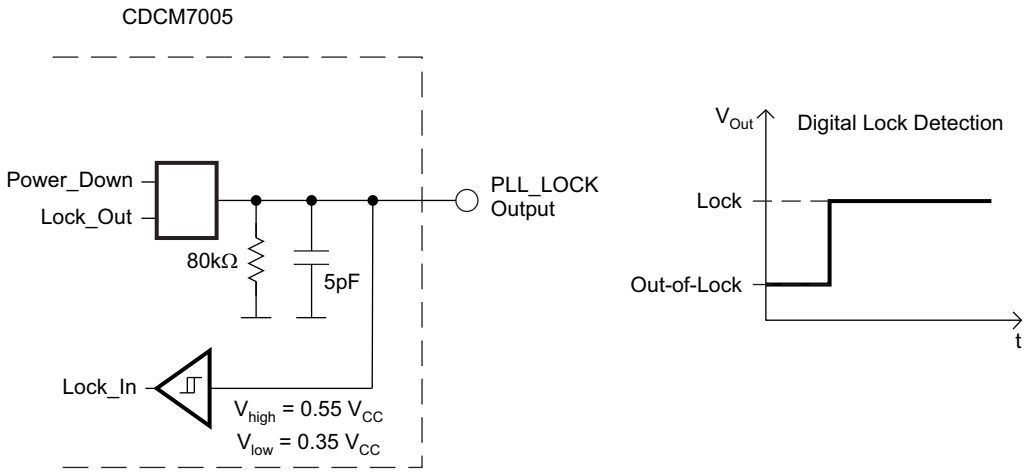

Figure 17. Digital Lock-Detect

When selecting the analog PLL Lock option, the high-pulses load the external capacitor via the internal 110-µA current source until logic high-level is reached. Therefore, more time is needed to detect logic high level, but jittering of PLL_LOCK will be suppressed in case of digital lock. The time PLL_LOCK needs to return to out of lock depends on the level of V_{Out}, when the current source starts to unload the external capacitor.

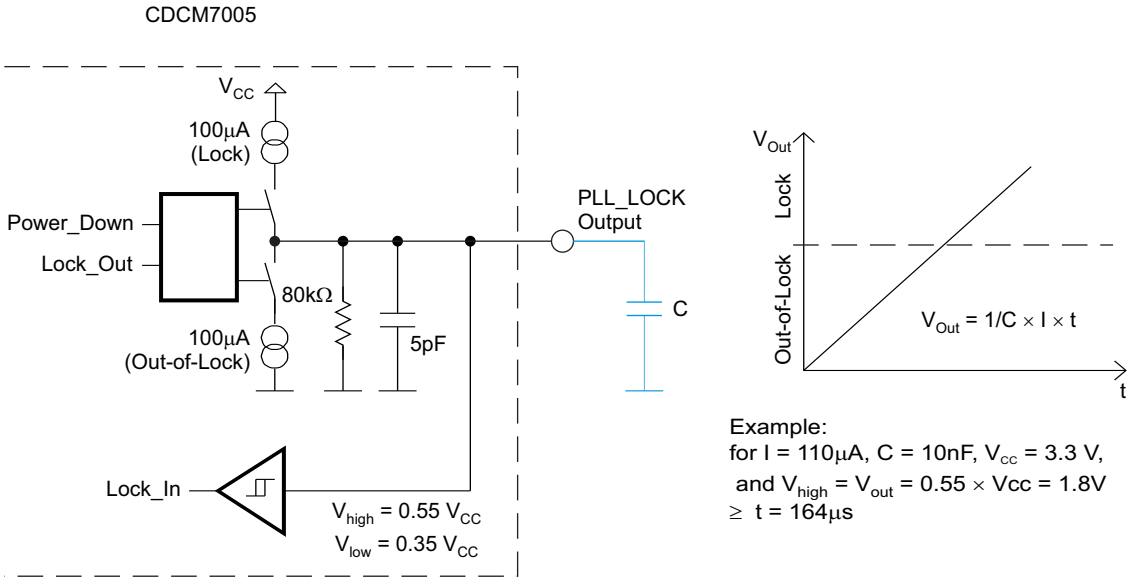

Figure 18. Analog Lock-Detect

Feature Description (continued)

9.3.3 Differential LVPECL Outputs and Single-Ended LVCMOS Outputs

The CDCM7005 supports up to 5 × LVPECL outputs or 10 × LVCMOS/LVTTL outputs or any combination of these. The single-ended LVCMOS outputs are arranged in pairs which mean both outputs of a LVCMOS pair have the same frequency but can separately be disabled or inverted. The power up output arrangement is five LVPECL (default setting).

The LVPECL outputs are designed to terminate in to a 50-Ω load to V_{CC} – 2 V. The LVCMOS outputs supports the standard LVCMOS load (see Figure 12). The LVPECL and LVCMOS outputs can be enabled (normal operation) or disabled (3-state).

In addition, the output phase can be shifted by 90 degrees when using the additional div-by-4 or div-by-8 mode of the P16-Div (see Figure 19). In the default mode (after power up), the div-by-16 mode of the P16-Div is active. To change it to a 90 degree phase shift, bit 30 or bit 31 of word 1 has to be programmed accordingly. The P 16-Div has to be selected via the dedicated YxMUX to obtain the 90 degree phase shift. The outputs are switched in pairs. When selecting the 90 degree phase shift mode, the div-by-16 functions will no longer be available. The 90 degree phase shifted signal is lagging to the non-shifted signal.

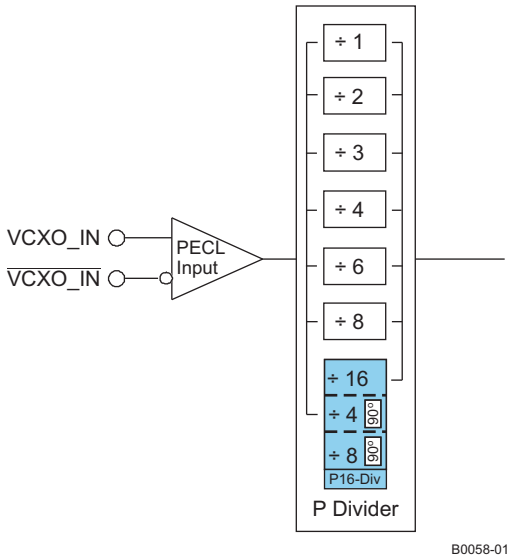

Figure 19. 90 Degree Phase Shift Option of P-Divider

Figure 20 shows the LVCMOS and LVPECL output signal when 90 degree phase shift is on.

Copyright © 2005–2017, Texas Instruments Incorporated

Feature Description (continued)

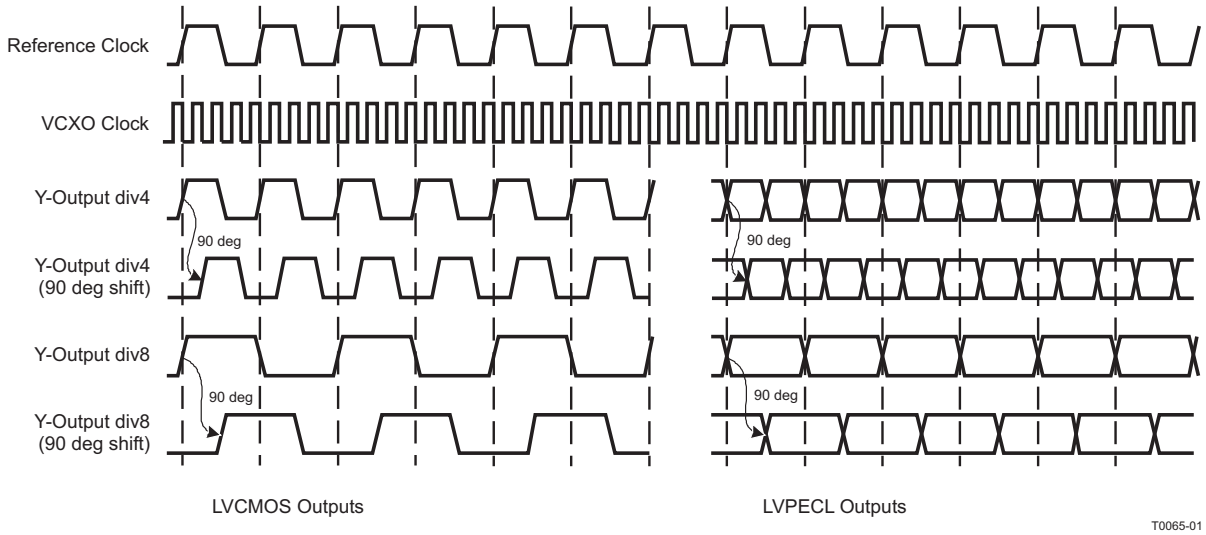

Figure 20. Output Switching Diagram

In addition, the LVCMOS supports disabled-to-low and 180 degree output phase shift for each output individually. When selecting the 180 degree phase shift together with the 90 degree phase shift, the respective outputs has a total phase shift of 270 degree (see Table 1).

Table 1. LVCMOS Phase Shift Options

PHASE	P-DIVIDER	180° PHASE-SHIFT	P16-DIV - FUNCTION
0°	Any P-Divider	No	div-by-16
90°	P16-Div	No	div-by-4 or div-by-8
180°	Any P-Divider	Yes	div-by-16
270°	P16-Div	Yes	div-by-4 or div-by-8

If the P16-Div is selected by the FB_MUX and div-by-4 or div-by-8 is active, the 90 degree phase shifted clock will be synchronized to PRI_REF or SEC_REF. This means all outputs Yxx, which are switched to div-by-4 or div-by-8, are in phase to PRI_REF or SEC_REF. All other outputs are 90 degree phase shifted with leading phase.

Copyright © 2005–2017, Texas Instruments Incorporated

9.3.4 Frequency Hold-Over Mode

The HOLD function is a useful feature which helps the designer to improve the system reliability. The HOLD function holds the output frequency in case the input reference clock fails or is disrupted. During HOLD, the charge pump is switched off (3-state) freezing the last valid output frequency. The hold function will be released after a valid reference clock is back. For proper HOLD function, the analog PLL lock detect mode has to be active.

The following register settings are involved with the HOLD function:

- *Lock Detect Window (Word 3, Bit 2, 3, 6)*: Defines the window in ns inside the lock is valid. The size is 3.5 ns, 8.5 ns, 18.5 ns, or a certain frequency offset. Lock is set if reference clock and the feedback clock are inside this predefined lock-detect window for a pre-selected number of successive cycles or if no frequency offset appears.
- *Out-of-Lock:* Defines the out-of-lock condition: If the reference clock and the feedback clock at the PFD are outside the predefined Lock Detect Window or if a certain frequency offset occurs.
- *Cycle-Slip (Word 3, Bit 6)*: A Frequency offset occurs if a certain frequency offset between reference frequency and feedback frequency (VCXO) at PFD input is detected. The minimum detectable frequency offset depends on the device setting and can be calculated:

  $$f_{offsetPDF} = f_{PFD} - 1/(1/f_{PFD} + PWD) \quad (1)$$

  where
  - $f_{offsetPFD}$ = detectable frequency offset at PFD between the reference frequency (f_{REF}) and feedback frequency (f_{FB})
  - f_{PFD} = frequency at phase-frequency detection circuitry
  - PWD = PFD Pulse Width Delay
- *Number of Clock Cycles (Word 3, Bit 4, 5)*: Defines the number of successive PFD cycles which have to occur inside the lock window to set Lock detect. This applies not for out-of-lock condition.
- *Hold-Function (Word 3, Bit 9)*: Selects HOLD function (see more details below).
- *Hold-Trigger (Word 3, Bit 11)*: Defines whether the HOLD function is always activated (Bit 11 = [1]) or whether it is dependent on the state of the analog PLL lock detect output (Bit 11 = [0]). In the latter case, HOLD is activated, if lock is set (high) and de-activated if Lock is reset (low).
- *Analog PLL Lock Detect (Word 1, Bit 29)*: Analog lock output charges or discharges an external capacitor with every valid lock cycle. The time constant for Lock detect can be set by the value of the capacitor.

The CDCM7005 supports two types of HOLD functions, one external controllable $\overline{HOLD}$ mode and one internal mode, HOLD.

With the *external $\overline{HOLD}$ function* the charge pump can directly be switched into 3-state (pin H8 [BGA] or pin 14 [QFN] can be programmed for $\overline{HOLD}$ [Word 2, Bit 29]). This function is also available via SPI register (Word 2, Bit 31).

If logic low is applied to the $\overline{HOLD}$ pin, the charge pump will be switched to 3-state. After the $\overline{HOLD}$ pin is released, the charge pump is switched back in to normal operation with the next valid reference clock cycle at PRI_REF or SEC_REF and the next valid feedback clock cycle at the PFD. During $\overline{HOLD}$, the P divider and all outputs Yx are at normal operation.

HOLD-Over-Function: The PLL has to be in lock to start the HOLD function. It switches the charge pump in to 3-State when an out-of-lock event occurs. It leaves the 3-state charge pump state when the reference clock is back. Then it starts a locking sequence of 64 cycles before it goes back to the beginning of the HOLD-over loop. The dedicated looking sequence and a digital phase alignment enable a fast lock.

Copyright © 2005–2017, Texas Instruments Incorporated

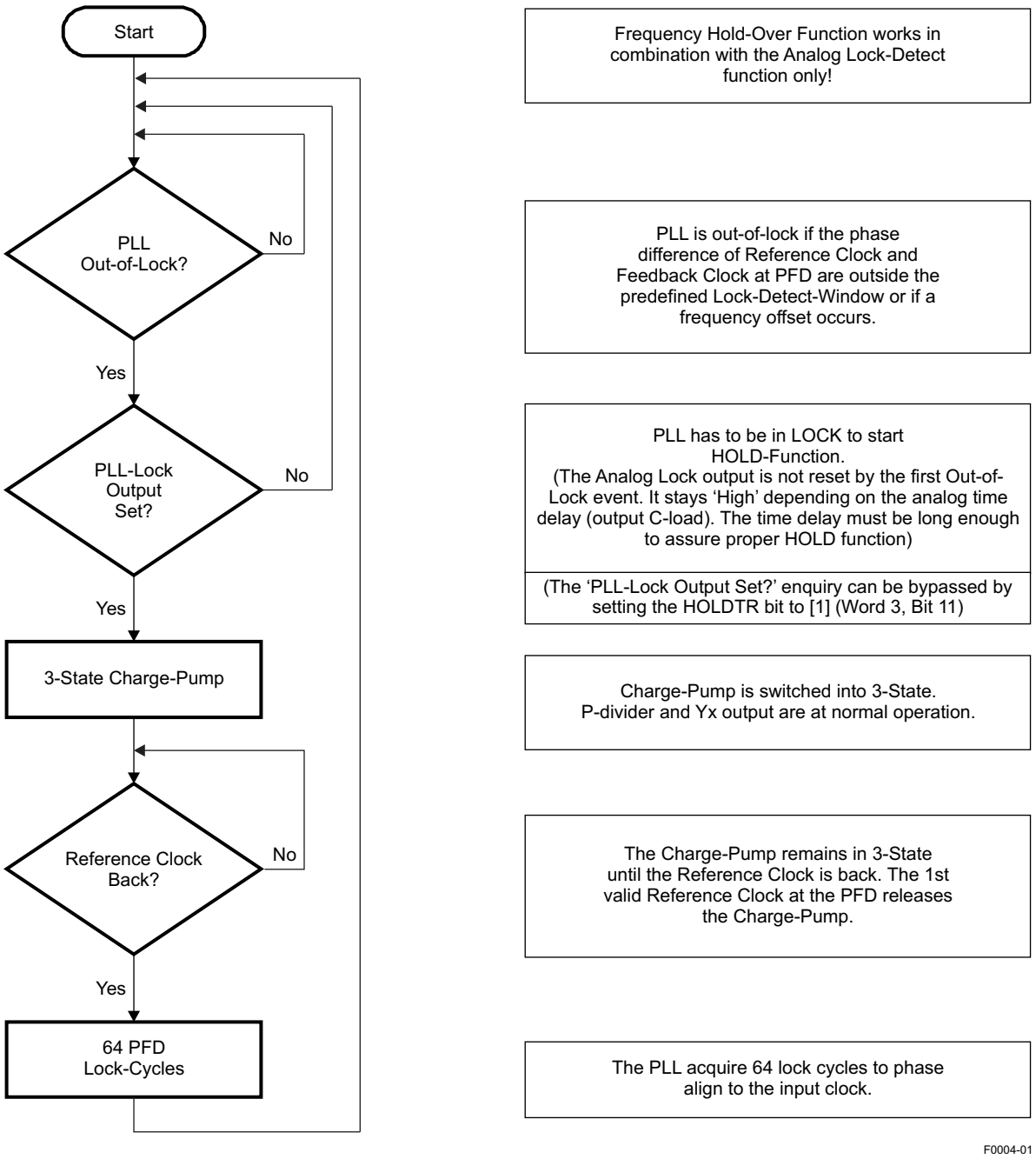

Figure 21. Frequency HOLD-Over Function

9.3.5 Charge Pump Preset to VCC_CP/2

The preset charge pump to VCC_CP/2 is a useful feature to quickly set the center frequency of the VC(X)O after powerup or reset. The adequate control voltage for the VC(X)O will be provided to the charge-pump output by an internal voltage divider of 1 kΩ/1 kΩ to VCC_CP and GND (VCC_CP/2).

This feature helps to get the initial frequency accuracy, i.e. required at CPRI (Common Public Radio Interface) or OBSAI (Open Base Station Architecture Initiative).

The preset charge pump to VCC_CP/2 can be set and reset by SPI register (word 2, bit 3). This feature must be disabled for PLL locking.

9.3.6 Charge Pump Current Direction

The direction of the charge pump (CP) current pulse can be changed by the SPI register (word 2, bit 2). It determines in which direction the CP current regulates (reference clock leads to feedback clock). Most applications use the positive CP output current (power-up condition) because of the use of a passive loop filter. The negative CP current is useful when using an active loop filter concept with inverting operational amplifier. Figure 22 shows the internal PFD signal and the corresponding CP current.

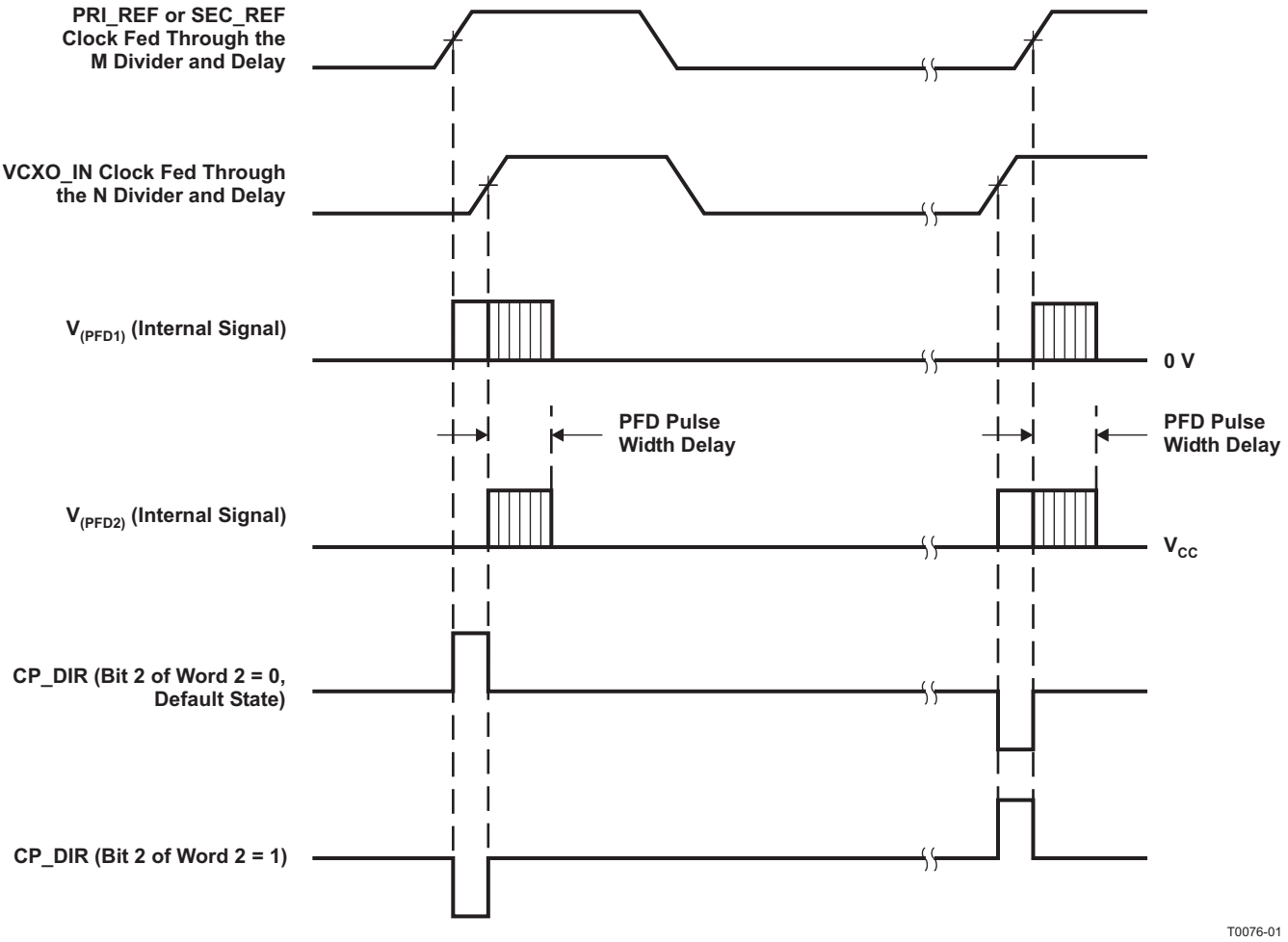

NOTE: The purpose of the PFD pluse width delay is to improve spurious suppression.

Figure 22. Charge Pump Current Direction (VCXO and VCO Support)

9.4 Device Functional Modes

Device starts up in normal operational mode and might enter RESET or Power-Down modes by external signal or by writing to internal SPI registers.

CDCM7005 enters the Power Down mode if PD signal is activated (LOW) or by writing to the corresponding bit in the configuration registers R02[28]. this power-down mode resets M- and N-Divider, 3-states charge pump, STATUS_REF, or PRI_SEC_CLK pin, STATUS_VCXO or I_REF_CP pin, PLL_LOCK pin, VBB pin and all Yx outputs. This mode resets all the SPI registers to the default value. In this mode maximum current consumption is 300 uA.

CDCM7005 enters the RESET mode when RESET pin is activated (LOW), given that this pin is configured as RESET by R02[29], or by writing to the corresponding bit R02[30].In case of RESET, the charge pump (CP) is switched to 3-state and all counters (N, M, P) are reset to zero (the initial divider settings are maintained in SPI registers). The LVPECL outputs are static low and high respectively and the LVCMOS outputs are all low or high if inverted. Note that RESET is not edge triggered and should have a pulse duration of at least 5 ns.

Copyright © 2005–2017, Texas Instruments Incorporated

9.5 Programming

9.5.1 SPI Control Interface

The serial interface of the CDCM7005 is a simple SPI-compatible interface for writing to the registers of the device and consists of three control lines: CTRL_CLK, CTRL_DATA, and CTRL_LE. There are four 32-bit wide registers, which can be addressed by the two LSBs of a transferred word (bit 0 and bit 1). Every transmitted word must have 32 bits, starting with MSB first. Each word can be written separately. Bit 7, 8, 10, and Bit 12 to 31 of Word 3 are reserved for factory test purposes and must be filled with zeros. The transfer is initiated with the falling edge of CTRL_LE; as long as CTRL_LE is high, no data can be transferred. During CTRL_LE, low data can be written. The data has to be applied at CTRL_DATA and has to be stable before the rising edge of CTRL_CLK. The transmission is finished by a rising edge of CTRL_LE. With the rising edge of CTRL_LE, the new word is asynchronously transferred to the internal register (e.g., N, M, P, ...). Each word has to be separately transmitted by this procedure. Unused or floating inputs must be tied to proper logic level. A 20kΩ or larger pull−up resistor to VCC is recommended.

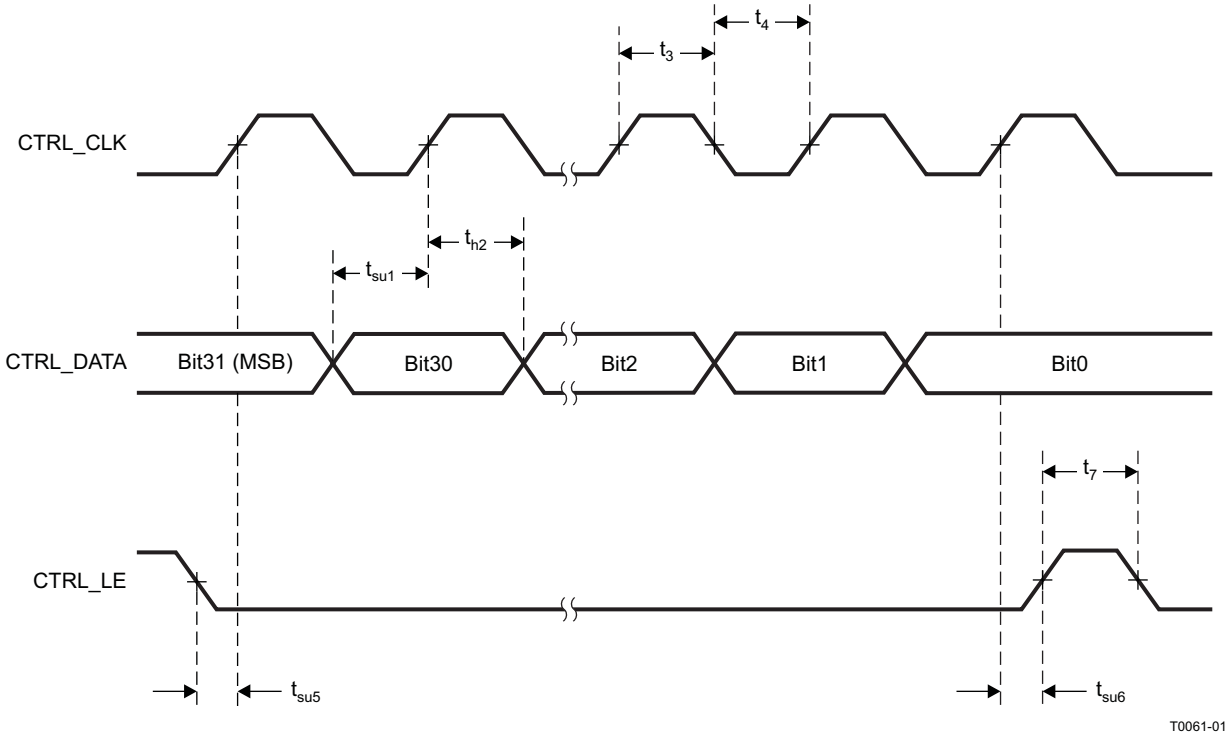

Figure 23. Timing Diagram SPI Control Interface

The SPI serial protocol accepts word Write operation only. There is neither a read, acknowledge, nor a handshake operation.

The following four words include the register settings of the programmable functions of the CDCM7005. It can be modified to the customer application by changing one or more bits. It comes up with a default register setting after power up or if the power down ($\overline{PD}$) control signal is applied. The default setting is shown in column five of the following words.

It is recommended to program Word 0, Word 1, Word 2, and Word 3 right after power up and $\overline{PD}$ becomes HIGH.

A low active function is shown as [0] and a high active function is shown as [1].

Programming (continued)

Table 2. Word 0

BIT	BIT NAME		DESCRIPTION/FUNCTION	POWER UP CONDITION	PIN AFFECTED	
					BGA	QFN
0	C0		Register Selection	0		
1	C1		Register Selection	0		
2	M0	Reference Divider M	Reference Divider M Bit 0	1		
3	M1		Reference Divider M Bit 1	1		
4	M2		Reference Divider M Bit 2	1		
5	M3		Reference Divider M Bit 3	1		
6	M4		Reference Divider M Bit 4	1		
7	M5		Reference Divider M Bit 5	1		
8	M6		Reference Divider M Bit 6	1		
9	M7		Reference Divider M Bit 7	0		
10	M8		Reference Divider M Bit 8	0		
11	M9		Reference Divider M Bit 9	0		
12	N0	VC(X)O Divider N (1)	VCXO Divider N Bit 0	1		
13	N1		VCXO Divider N Bit 1	1		
14	N2		VCXO Divider N Bit 2	1		
15	N3		VCXO Divider N Bit 3	1		
16	N4		VCXO Divider N Bit 4	1		
17	N5		VCXO Divider N Bit 5	1		
18	N6		VCXO Divider N Bit 6	1		
19	N7		VCXO Divider N Bit 7	0		
20	N8		VCXO Divider N Bit 8	0		
21	N9		VCXO Divider N Bit 9	0		
22	N10		VCXO Divider N Bit 10	0		
23	N11		VCXO Divider N Bit 11	0		
24	DLYM0	Progr. Delay M	Reference Phase Delay M Bit 0	0		
25	DLYM1		Reference Phase Delay M Bit 1	0		
26	DLYM2		Reference Phase Delay M Bit 2	0		
27	DLYN0	Progr. Delay N	Feedback Phase Delay N Bit 0	0		
28	DLYN1		Feedback Phase Delay N Bit 1	0		
29	DLYN2		Feedback Phase Delay N Bit 2	0		
30	MANAUT	Manual or Auto Ref.	Manual Reference Clock Selection [0] Automatic Reference Clock Selection [1]	0	A1, B1	36, 37
31	REFDEC	Freq. Detect	Reference Frequency Detection on [0], off [1] (2)	0	C8	23

(1) The frequency applied to the Divider N must be smaller than 300 MHz. A sufficient P Divider must be selected with the FB_MUX to maintain this criteria.
(2) If set to low, STATUS_REF will be in normal operation. If set to high, STATUS_REF will be high, even if no valid clock is detected (<2 MHz). This is useful for reference inputs frequencies less than 2 MHz where the frequency detection circuitry normally resets the STATUS_REF signal to low.

Copyright © 2005–2017, Texas Instruments Incorporated

Table 3. Word 1

BIT	BIT NAME		DESCRIPTION/FUNCTION	POWER UP CONDITION	PIN AFFECTED	
					BGA	QFN
0	C0		Register Selection	1		
1	C1		Register Selection	0		
2	OUTSEL0	Output (Yx) Signaling Selection	For Output Y0A, Y0B: LVPECL = enabled [1]; LVCMOS = enabled [0];	1	F1, G1	46, 47
3	OUTSEL1		For Outputs Y1A, Y1B: LVPECL = enabled [1]; LVCMOS = enabled [0];	1	H2, H3	3, 4
4	OUTSEL2		For Outputs Y2A, Y2B: LVPECL = enabled [1]; LVCMOS = enabled [0];	1	H4, H5	7, 8
5	OUTSEL3		For Outputs Y3A, Y3B: LVPECL = enabled [1]; LVCMOS = enabled [0];	1	H6, H7	11, 12
6	OUTSEL4		For Outputs Y4A, Y4B: LVPECL = enabled [1]; LVCMOS = enabled [0];	1	G8, F8	16,17
7	OUT0A0	Output Y0 Mode	Output Y0A Mode Bit 0	0	F1	46
8	OUT0A1		Output Y0A Mode Bit 1	0	F1	46
9	OUT0B0		Output Y0B Mode Bit 0	0	G1	47
10	OUT0B1		Output Y0B Mode Bit 1	0	G1	47
11	OUT1A0	Output Y1 Mode	Output Y1A Mode Bit 0	0	H2	3
12	OUT1A1		Output Y1A Mode Bit 1	0	H2	3
13	OUT1B0		Output Y1B Mode Bit 0	0	H3	4
14	OUT1B1		Output Y1B Mode Bit 1	0	H3	4
15	OUT2A0	Output Y2 Mode	Output Y2A Mode Bit 0	0	H4	7
16	OUT2A1		Output Y2A Mode Bit 1	0	H4	7
17	OUT2B0		Output Y2B Mode Bit 0	0	H5	8
18	OUT2B1		Output Y2B Mode Bit 1	0	H5	8
19	OUT3A0	Output Y3 Mode	Output Y3A Mode Bit 0	0	H6	11
20	OUT3A1		Output Y3A Mode Bit 1	0	H6	11
21	OUT3B0		Output Y3B Mode Bit 0	0	H7	12
22	OUT3B1		Output Y3B Mode Bit 1	0	H7	12
23	OUT4A0	Output Y4 Mode	Output Y4A Mode Bit 0	0	G8	16
24	OUT4A1		Output Y4A Mode Bit 1	0	G8	16
25	OUT4B0		Output Y4B Mode Bit 0	0	F8	17
26	OUT4B1		Output Y4B Mode Bit 1	0	F8	17
27	SREF	Status Ref.	Displays the status of the reference clock at the STATUS_REF output [0] Displays the selected clock (high for PRI_REF and low for SEC_REF clock) at the STATUS_REF output [1]	0	C8	23
28	SXOIREF	Status VCXO or I_REF_CP	Selects STATUS_VCXO [0] Selects I_REF_CP [1] which enable external reference resistor used for charge pump current and analog PLL lock detect output current.	0	D8, A8	22, 25
29	ADLOCK	Analog or Digital Lock	Selects Digital PLL_LOCK [0] Selects Analog PLL_LOCK [1]	0	A8	25
30	90DIV4	90 degree shift div-4	90 degree output phase shift in div-4 mode on [1]; off [0] (1)	0	Yx	Yx
31	90DIV8	90 degree shift div-8	90 degree output phase shift in div-8 mode on [1]; off [0] (1)	0	Yx	Yx

(1) The P 16-Div has to be selected to obtain the 90 degree phase shift. If bit 30 or bit 31 is set, the Div-by-16 mode is no longer available. The outputs are switched in pairs. Only one bit can be set at a time. If both bits set to [1] at the same time, no 90 degree phase shift mode is selected (equal to off-mode setting).

Copyright © 2005–2017, Texas Instruments Incorporated

Table 4. Word 2

BIT	BIT NAME		DESCRIPTION/FUNCTION	POWER UP CONDITION	PIN AFFECTED	
					BGA	QFN
0	C0		Register Selection	0		
1	C1		Register Selection	1		
2	CP_DIR	CP Direction	Determines in which direction CP current regulates (Reference Clock leads to Feedback Clock – see Figure 22) – positive CP output current [0]; – negative CP output current [1];	0	A4	31
3	PRECP		Preset charge pump output voltage to VCC_CP/2, on [1], off [0]	0	A4	31
4	CP0	CP Current	CP Current Setting Bit 0	0	A4	31
5	CP1		CP Current Setting Bit 1	1	A4	31
6	CP2		CP Current Setting Bit 2	0	A4	31
7	CP3		CP Current Setting Bit 3	1	A4	31
8	PFD0	PFD Pulse Width	PFD Pulse Width PFD Bit 0	0	A4	31
9	PFD1		PFD Pulse Width PFD Bit 1	0	A4	31
10	FBMUX0	FB_MUX	Feedback MUX Select Bit 0	1		
11	FBMUX1		Feedback MUX Select Bit 1	0		
12	FBMUX2		Feedback MUX Select Bit 2	1		
13	Y0MUX0	Y0_MUX	Output Y0x Select Bit 0	1	F1, G1	46, 47
14	Y0MUX1		Output Y0x Select Bit 1	0	F1, G1	46, 47
15	Y0MUX2		Output Y0x Select Bit 2	1	F1, G1	46, 47
16	Y1MUX0	Y1_MUX	Output Y1x Select Bit 0	1	H2, H3	3, 4
17	Y1MUX1		Output Y1x Select Bit 1	0	H2, H3	3, 4
18	Y1MUX2		Output Y1x Select Bit 2	1	H2, H3	3, 4
19	Y2MUX0	Y2_MUX	Output Y2x Select Bit 0	1	H4, H5	7, 8
20	Y2MUX1		Output Y2x Select Bit 1	0	H4, H5	7, 8
21	Y2MUX2		Output Y2x Select Bit 2	1	H4, H5	7, 8
22	Y3MUX0	Y3_MUX	Output Y3x Select Bit 0	1	H6, H7	11, 12
23	Y3MUX1		Output Y3x Select Bit 1	0	H6, H7	11, 12
24	Y3MUX2		Output Y3x Select Bit 2	1	H6, H7	11, 12
25	Y4MUX0	Y4_MUX	Output Y4x Select Bit 0	1	G8, F8	16, 17
26	Y4MUX1		Output Y4x Select Bit 1	0	G8, F8	16, 17
27	Y4MUX2		Output Y4x Select Bit 2	1	G8, F8	16, 17
28	$\overline{PD}$		Power Down mode on [0], off [1]	1	Yx	Yx
29	RESHOL		$\overline{RESET}$ or $\overline{HOLD}$ Pin definition: $\overline{RESET}$ [0] or $\overline{HOLD}$ [1]	0	H8	14
30	$\overline{RESET}$		Resets all dividers [0] - (equal to $\overline{RESET}$ pin function)	1		
31	$\overline{HOLD}$		3-state charge pump [0] - (equal to $\overline{HOLD}$ pin function)	1	A4	31

Copyright © 2005–2017, Texas Instruments Incorporated

Table 5. Word 3

BIT	BIT NAME		DESCRIPTION/FUNCTION	POWER UP CONDITION	PIN AFFECTED	
					BGA	QFN
0			Register selection	1		
1			Register selection	1		
2	LOCKW 0	Lock Window	Lock-detect window Bit 0	1	A8	25
3	LOCKW 1		Lock-detect window Bit 1	0	A8	25
4	LOCKC0	Lock Cycles	Number of coherent lock events Bit 0	0	A8	25
5	LOCKC1		Number of coherent lock events Bit 1	1	A8	25
6	FOFF	Frequency Offset	Frequency offset mode only for out-of-lock detection on [1] or off [0](1)	0	A8	25
7	RES		RESERVED	0	RES	RES
8	RES		RESERVED	0	RES	RES
9	HOLDF	HOLD Function	Enables the frequency hold-over function on [1], off [0]	0		
10			RESERVED	0	RES	RES
11	HOLDTR	HOLD Trigger Condition	HOLD function always activated [1];(2) Triggered by analog PLL lock detect outputs [0] (if analog PLL Lock signal is set then HOLD is activated; if analog PLL lock signal is reset then HOLD is de-activated).	0		
12	RES		RESERVED	0	RES	RES
13	RES		RESERVED	0	RES	RES
14	RES		RESERVED	0	RES	RES
15	RES		RESERVED	0	RES	RES
16	GTME		General Test Mode Enable. Test Mode is only enabled if this bit is set to 1.	0		
17	RES		RESERVED	0	RES	RES
18	RES		RESERVED	0	RES	RES
19	RES		RESERVED	0	RES	RES
20	RES		RESERVED	0	RES	RES
21	RES		RESERVED	0	RES	RES
22	RES		RESERVED	0	RES	RES
23	RES		RESERVED	0	RES	RES
24	RES		RESERVED	0	RES	RES
25	RES		RESERVED	0	RES	RES
26	RES		RESERVED	0	RES	RES
27	RES		RESERVED	0	RES	RES
28	PFDFC		PFD Frequency Control. Data provided to the PFD are feed through to the corresponding STATUS pins(3)	0	D8	22
29	RES		RESERVED	0	RES	RES
30	RES		RESERVED	0	RES	RES
31	RES		RESERVED	0	RES	RES

(1) If Frequency offset mode only for out-of-lock detection is on, the selected lock detect window is valid for lock detect. Independent from this, out of lock is valid if a frequency offset is detected.
(2) HOLD function always activated is recommended for test purposes only.
(3) The maximum frequency for the STATUS_VCXO pin is 100 MHz.

9.5.2 Functional Description of the Logic

Table 6. Reference Divider M (Word 0)(1)

M9	M8	M7	M6	M5	M4	M3	M2	M1	M0	DIV BY	DEFAULT
0	0	0	0	0	0	0	0	0	0	1	
0	0	0	0	0	0	0	0	0	1	2	
0	0	0	0	0	0	0	0	1	0	3	
0	0	0	0	0	0	0	0	1	1	4	
					• • •						
0	0	0	1	1	1	1	1	1	1	128	Yes
					• • •						
1	1	1	1	1	1	1	1	0	1	1022	
1	1	1	1	1	1	1	1	1	0	1023	
1	1	1	1	1	1	1	1	1	1	1024	

(1) If the divider value is Q, then the code will be the binary value of (Q–1).

Table 7. VC(X)O Feedback Divider N (Word 0)(1) (2)

N11	N10	N0	N8	N7	N6	N5	N4	N3	N2	N1	N0	DIV BY	DEFAULT
0	0	0	0	0	0	0	0	0	0	0	0	1	
0	0	0	0	0	0	0	0	0	0	0	1	2	
0	0	0	0	0	0	0	0	0	0	1	0	3	
0	0	0	0	0	0	0	0	0	0	1	1	4	
						• • •							
0	0	0	0	0	1	1	1	1	1	1	1	128	Yes
						• • •							
1	1	1	1	1	1	1	1	1	1	0	1	4094	
1	1	1	1	1	1	1	1	1	1	1	0	4095	
1	1	1	1	1	1	1	1	1	1	1	1	4096	

(1) If the divider value is Q, then the code will be the binary value of (Q–1).
(2) The frequency applied to the Divider N must be smaller than 300 MHz. A sufficient P Divider must be selected with the FB_MUX to maintain this criteria.

Copyright © 2005–2017, Texas Instruments Incorporated

Table 8. Output Mode Selection for LVCMOS and LVPECL Outputs: Y0A, Y0B, Y1A …Y4B (Word 1)(1)

	OUTSELx	OUTxB1	OUTxB0	LVCMOS [YxB]	OUTxA1	OUTxA0	LVCMOS [YxA]	DEFAULT
LVCMOS	0	0	0	Active	0	0	Active	
	0	0	1	3-state	0	1	3-state	
	0	1	0	Inverting	1	0	Inverting	
	0	1	1	Low	1	1	Low	
	OUTSELx	**OUTxB1**	**OUTxB0**		**OUTxA1**	**OUTxA0**	**LVCMOS [YxA]**	**DEFAULT**
LVPECL	1	x	x		x	0	Active	Yx
	1	x	x		x	1	3-state	

(1) If the differential LVPECL output e.g. Y0A:Y0B is selected (bit 2 of word 1), then only bit 7 of word 1 defines the output mode for Y0A:Y0B. The settings of bit 8, bit 9, and bit 10 of word 1 are therefore not relevant to the Y0A:Y0B. This applies for the other LVPECL outputs as well.

Table 9. Reference Delay M (PRI_REF or SEC_REF) and Feedback Delay N (VCXO) Phase Adjustment (Word 0)(1)

DLYM2 / DLYN2	DLYM1 / DLYN1	DLYM0 / DLYN0	PHASE OFFSET	DEFAULT
0	0	0	0 ps	Yes
0	0	1	±160 ps	
0	1	0	±320 ps	
0	1	1	±480 ps	
1	0	0	±830 ps	
1	0	1	±1130 ps	
1	1	0	±1450 ps	
1	1	1	±1750 ps	

(1) If Progr. Delay M is set, all Yx outputs are lagging to the reference clock according to the value set. If Progr. If Delay N is set; all Yx outputs are leading to the reference clock according to the value set. Above are typical values at V_{CC} = 3.3 V, Temp = 25°C, PECL-output relate to Div4 mode.

Table 10. PFD Pulse Width Delay (Word 2)

PFD1(1)	PFD0(1)	PFD PULSE WIDTH(1) (2)	DEFAULT(1)
0	0	1.5 ns	Yes
0	1	3 ns	
1	0	4.5 ns	
1	1	6 ns	

(1) The *PFD pulse width delay* gets around the dead zone of the PFD transfer function and reduces phase noise and reference spurs.
(2) Typical values at V = 3.3 V_{CC}, Temp = 25°C .

Table 11. Lock-Detect Window (Word 3)

LOCKW1	LOCKW0	PHASE-OFFSET AT PFD INPUT(1)	DEFAULT
0	0	3.5 ns	
0	1	8.5 ns	Yes
1	0	18.5 ns	
1	1	Frequency offset(2)	

(1) Typical Values at V_{CC} = 3.3 V, Temp = 25°C.
(2) The PLL is out-of-lock (PLL_LOCK set low) if a certain frequency offset between reference frequency and feedback frequency (VCXO) at PFD input is detected. The minimum detectable frequency offset depends on the device setting and can be calculated:
(a) $f_{offsetPDF} = f_{PFD} - 1/(1/f_{PFD} + PWD)$
(b) $f_{offsetPFD}$ = detectable frequency offset at PFD between the reference frequency (f_{REF}) and feedback frequency (f_{FB})
(c) f_{PFD} = frequency at phase-frequency detection circuitry
(d) PWD = PFD Pulse Width Delay

Table 12. Number of Successive Lock Events Inside the Lock Detect Window (Word 3)

LOCKC1(1)	LOCKC0(1)	NO. OF SUCCESSIVE LOCK EVENTS(1)	DEFAULT(1)
0	0	1	
0	1	16	
1	0	64	Yes
1	1	256	

(1) This does not apply to Out-of-Lock condition.

Table 13. Charge Pump Current (Word 2)

CP3	CP2	CP1	CP0	TYPICAL CHARGE PUMP CURRENT	DEFAULT
0	0	0	0	0 µA (3-state)	
0	0	0	1	200 µA	
0	0	1	0	400 µA	
0	0	1	1	600 µA	
0	1	0	0	800 µA	
0	1	0	1	1 mA	
0	1	1	0	1.2 mA	
0	1	1	1	1.4 mA	
1	0	0	0	1.6 mA	
1	0	0	1	1.8 mA	
1	0	1	0	2.0 mA	Yes
1	0	1	1	2.2 mA	
1	1	0	0	2.4 mA	
1	1	0	1	2.6 mA	
1	1	1	0	2.8 mA	
1	1	1	1	3 mA	

Copyright © 2005–2017, Texas Instruments Incorporated

Table 14. FB_MUX Selection (Word 2)

FBMUX2	FBMUX1	FBMUX0	SELECTED VC(X)O SIGNAL FOR THE PHASE DESCRIMINATOR	DEFAULT
0	0	0	Div by 1	
0	0	1	Div by 2	
0	1	0	Div by 3	
0	1	1	Div by 4	
1	0	0	Div by 6	
1	0	1	Div by 8	Yes
1	1	0	Div by 16 (1)	
1	1	1	Div by 8	

(1) This divider setting depends on the selected P-divider mode for the “Div-by-16” divider. In the default mode (after power up), Div-by-16 is selected. But if bit 30 or bit 31 of word 1 is set to [1], then the Div-by-4 and 90 degree phase shift or Div-by-8 and 90 degree phase shift is selected.

Table 15. Yx_MUX – Output Divider Selection for Y0, Y1, Y2, Y3, Y4 (Word 2)

YxMUX2	YxMUX1	YxMUX0	SELECTED DIVIDED V(C)XO SIGNAL FOR THE Yx OUTPUTS	DEFAULT
0	0	0	Div by 1	
0	0	1	Div by 2	
0	1	0	Div by 3	
0	1	1	Div by 4	
1	0	0	Div by 6	
1	0	1	Div by 8	all Yx
1	1	0	Div by 16 (1)	
1	1	1	Div by 8	

(1) This divider setting depends on the selected P-divider mode for the “Div-by-16” divider. In the default mode (after power up), Div-by-16 is selected. But if bit 30 or bit 31 of word 1 is set to [1], then the Div-by-4 and 90 degree phase shift or Div-by-8 and 90 degree phase shift is selected.

Copyright © 2005–2017, Texas Instruments Incorporated

10 Application and Implementation

NOTE

Information in the following applications sections is not part of the TI component specification, and TI does not warrant its accuracy or completeness. TI's customers are responsible for determining suitability of components for their purposes. Customers should validate and test their design implementation to confirm system functionality.

10.1 Application Information

10.1.1 Application Information on the Clock Generation for Interpolating DACs With the CDCM7005

The CDCM7005, with its specified phase noise performance, is an ideal sampling clock generator for high speed ADCs and DACs. The CDCM7005 is especially of interest for the new high speed DACs, which have integrated interpolation filter. Such DACs achieve sampling rates up to 500 MSPS. This high data rate can typically not be supported from the digital side driving the DAC (e.g., DUC, digital up-converter). Therefore, one approach to interface the DUC to the DAC is the integration of an interpolation filter within the DAC to reduce the data rate at the digital input of the DAC. In 3G systems, for example, a common sampling rate of a high speed DAC is 491.52 MSPS. With a four times interpolation of the digital data, the required input data rate results into 122.88 MSPS, which can be supported easily from the digital side. The DUC GC5016, which supports up to four WCDMA carriers, provides a maximum output data rate of 150 MSPS. An example is shown in Figure 24, where the CDCM7005 supplies the clock signal for the DUC/DDC and ADC/DAC.

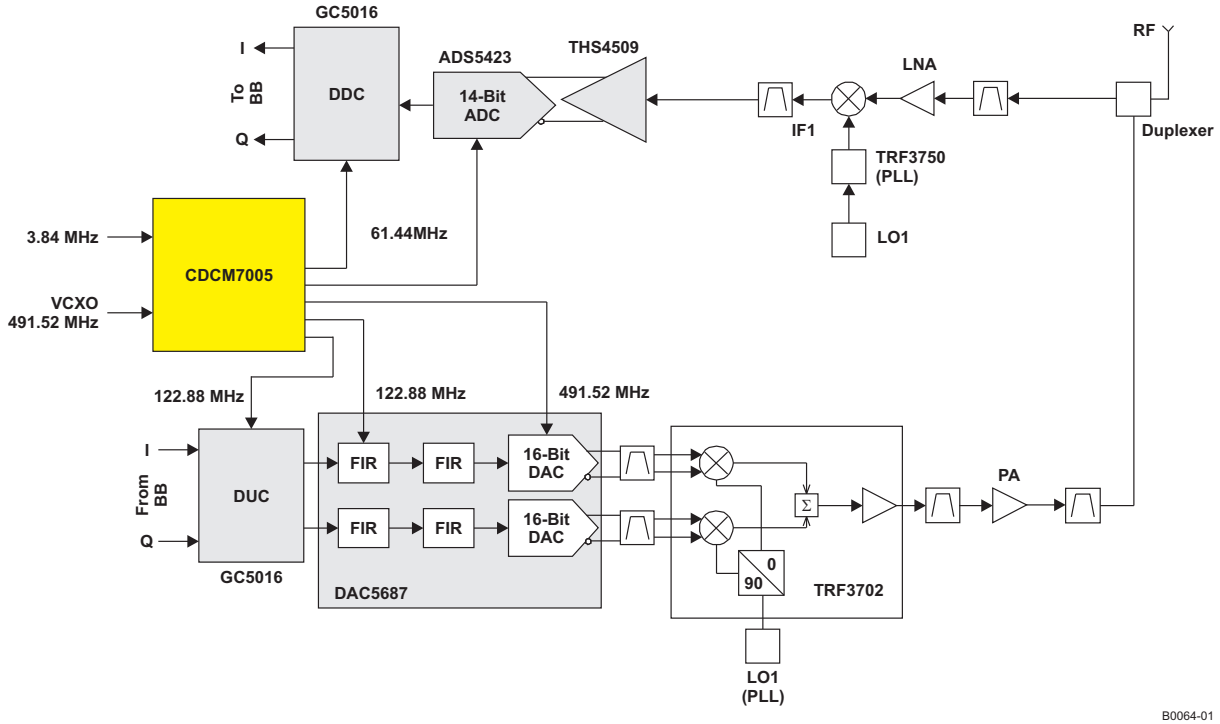

Figure 24. CDCM7005 as a Clock Generator for High-Speed ADCs and DACs

Copyright © 2005–2017, Texas Instruments Incorporated

Application Information (continued)

The generation of the two required clock signals (data input clock, clock for DAC) for such an interpolating DAC can be done in different ways. The recommended way is to use the CDCM7005, which generates the fast sampling clock for the DAC from the data input clock signal. The DAC5687 demands that the edges of the two input clocks must be phase aligned within ±500 ps for latching the data properly. This phase alignment is well achieved with the CDCM7005, which assures a maximum skew of 70 ps of the different different outputs to each other.

10.1.1.1 AC-Coupled Interface to ADC/DAC

Another advantage of this clock solution is that the ADC or DAC can be driven directly in an ac-coupling interface as shown in Figure 25, with an external termination in a differential configuration. There is no need for a transformer to generate a differential signal from a single-ended clock source.

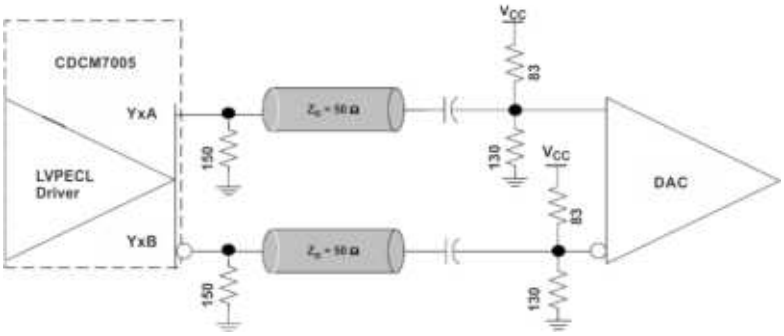

Figure 25. Driving DAC or ADC With PECL Output of the CDCM7005

10.1.2 Phase Noise

Table 16. Phase Noise Performance

PARAMETER[1]		TEST CONDITIONS	REF_IN PHASE NOISE AT 30.72 MHz	VCXO PHASE NOISE AT 245.76 MHz	Yx PHASE NOISE AT 30.72 MHz		UNIT
					LVCMOS	LVPECL	
					TYP[2]	TYP[2]	
phn10	Phase noise at 10 Hz	Y = 30.72 MHz; f_{PFD} = 200 kHz, Loop BW = 20 Hz, Feedback Divider = 8 x 128 (N x P), f_{REF_IN} = 30.72 MHz, M-Divider = 128, I_{CP} = 2 mA	–109	–75	–104	–100	dBc/Hz
phn100	Phase noise at 100 Hz		–125	–97	–116	–116	dBc/Hz
phn1k	Phase noise at 1 kHz		–134	–117	–140	–140	dBc/Hz
phn10k	Phase noise at 10 kHz		–136	–138	–153	–152	dBc/Hz
phn100k	Phase noise at 100 kHz		–138	–148	–156	–153	dBc/Hz
phn1Mk	Phase noise at 1 MHz		–144	–148	–156	–153	dBc/Hz
phn10M	Phase noise at 10 MHz		–144	–148	–156	–153	dBc/Hz
PLL STABILIZATION TIME							
tstabi	PLL stabilization time[3]	Y = 30.72 MHz, f_{PFD} = 200 kHz, Loop BW = 20 Hz, Feedback Divider = 8 x 128 (N x P), f_{REF_IN} = 30.72 MHz, M-Divider = 128, I_{CP} = 2 mA			400		ms

(1) Output phase noise is dependent on the noise of the REF_IN clock and VCXO clock noise floor. The phase noise performance of the BGA and the QFN package is equal. The phase noise measurements were taken with the CDCM7005 EVM and CDCM7005 SPI default settings.
(2) The typical stabilization time is based on the above application example. The stabilization criterion was a stable high level of PLL_LOCK.
(3) For further explanations, as well as phase noise/jitter test results using various VCXOs, see application note SCAA067.

10.1.3 In-Band Noise Performance

Table 17. CDCM7005 In-Band Noise

PARAMETER		TEST CONDITIONS	MIN	TYP	MAX	UNIT
$pn_{in\text{-}band}$	In-band phase noise test conditions	Y = 900 MHz, f_{PFD} = 400 kHz, Loop BW = 27 kHz, Feedback Divider = 8 x 282 (N x P), f_{REF_IN} = 10 MHz; M-Divider = 25, I_{CP} = 3 mA		–95		dBc/Hz
pn_{f400}	Phase noise floor at 400 kHz f_{PFD}, in-band noise – 20log(feedback div) (1)			–162		dBc/Hz
pn_{f1}	Phase noise floor at 1 Hz f_{PFD}, in-band noise – 20log(feedback div) – 10log(f_{PFD}) (2)			–218		dBc/Hz

(1) The synthesizer phase noise floor can be estimated by measuring the in-band noise at the output of the CDCM7005 and subtracting 20log(Feedback Divider) N (in case of CDCM7005 it is the N+P divider). The calculated phase noise floor still based on the PFD update frequency, in the above specification, is 400 kHz.

(2) The in-band noise can also be normalized to a comparison frequency of 1 Hz. The resulting phase noise floor is: pnfloor = PNmeasured - 20log(N+P) - 10log(f_{PFD})
where:
pnNfloor = normalized phase noise floor in dBc/Hz
PNmeasured = in-band phase noise measurement in dBc/Hz
20log(N+P) = divider ratio of feedback loop
10log(f_{PFD}) = PFD update frequency in Hz

Copyright © 2005–2017, Texas Instruments Incorporated

10.2 Typical Application

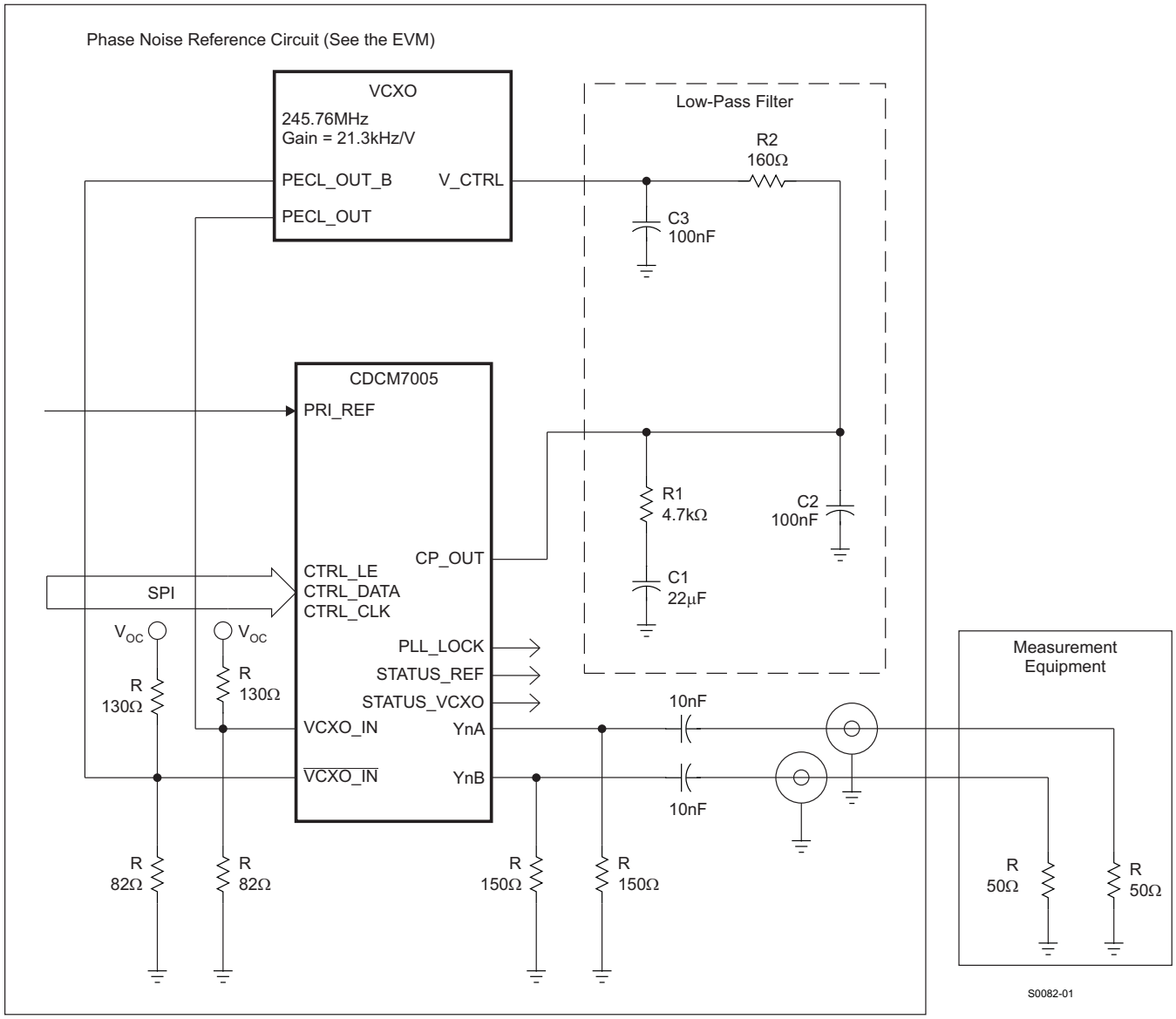

Figure 26. Typical Applications Diagram With Passive Loop Filter

10.2.1 Design Requirements

Before PLL design starts, design targets and constraints should be specified.

Design targets include: output frequency, output phase noise or output jitter over certain band, maximum lock time or maximum dynamic frequency deviation during settling.

Design constraints might include: input frequency, specific VCO/VCXO device, certain type of filter (e.g. passive)

Most probably VCO/VCXO is determined based on the noise requirements, or frequency plan needs. Input frequency is typically given by application or system needs. Power or noise requirement might dictate certain type of filter.

Typical Application (continued)

10.2.2 Detailed Design Procedure

The CDCM7005 design procedure aims at:

- Properly configuring the PLL dividers to achieve lock under given frequency plan
- Determining loop BW/phase margin/gain peaking to achieve given noise/dynamic performance
- Determine the filter type and component values based on the loop BW/phase margin

The proper division ratios can be calculated from the given relations:

f_{out}: the desired output frequency (250 MHz for LVCMOS, 1.5 GHz max for LVPECL)

f_{in}: the given input frequency (200 MHz maximum)

f_{VCO} : the selected VCO or VCXO frequency (2.2 GHz maximum)

f_{PFD}: the update frequency of the PFD, 100 MHz maximum

M : reference divider (10 bits: 1 to 1024)

P2 : output divider, also known as Output Mux (/1, /2, /3, /4, /6, /8, /16)

P1 : Pre-scalar, also known as Feedback Mux (/1, /2, /3, /4, /6, /8, /16)

N : feedback divider (12 bits: 1 to 4096), with max input freq of 300 MHz.

Once frequency plan and feasible divider settings are determined, a proper BW/phase margin and gain peaking should be determined. The best way to determine those parameters is to use the TI CDCM7005 PLL Calculator tool (PLL-SIM) available on TI website.

Several iterations might be required to achieve the optimum BW/phase margin for a given phase noise and dynamic performance. Better dynamic performance (faster settling) requires higher BW, and possibly some peaking. This is, however, typically increases the phase noise contribution of the PLL and increases frequency offset during settling. Noise performance doesn't only depend on the loop parameters, but also on the noise performance of the input source and the selected VCO/VCXO. PLL Calculator tool allows the user to include noise profiles from those two sources into noise calculation.

Once the loop parameters are specified, filter design and charge pump current can be determined. CDCM72005 charge pump can be set in the range of 200uA to 3mA with 200uA step. PLL Calculator tool supports filter component value synthesis for three types of filter: second order passive filter, third order passive filter, and third order active filter. Other filter types can be used but the user has to carry out the calculation manually.

3rd order pole placement is typically a trade-off between stability and spur performance (spur suppression) the closer the 3rd pole to the loop BW, the higher the suppression, but the phase margin deteriorates and hence loop stability is affected.

Example:

Design a PLL using CDCM7005 using an input reference of 10.23 MHz, and VCXO of 155 MHz and an output of the same frequency, using a passive filter.

A common divisor of 10.23 MHz and 155 MHz is 310 kHz which can be used as update frequency.

M = 33, N = 125, P1 = 4, and P2 = 1 should lead to loop lock.

Using the PLL calculator tool, an RMS jitter of 700 ps (given the reference and VCXO noise profile) can be achieved using a loop BW of 1.34 kHz and phase margin of around 80 degrees.

This can be achieved with Charge pump current of 3mA. The PLL calculator tool can also calculate the filter component values.

Copyright © 2005–2017, Texas Instruments Incorporated

Typical Application (continued)

10.2.3 Application Curve

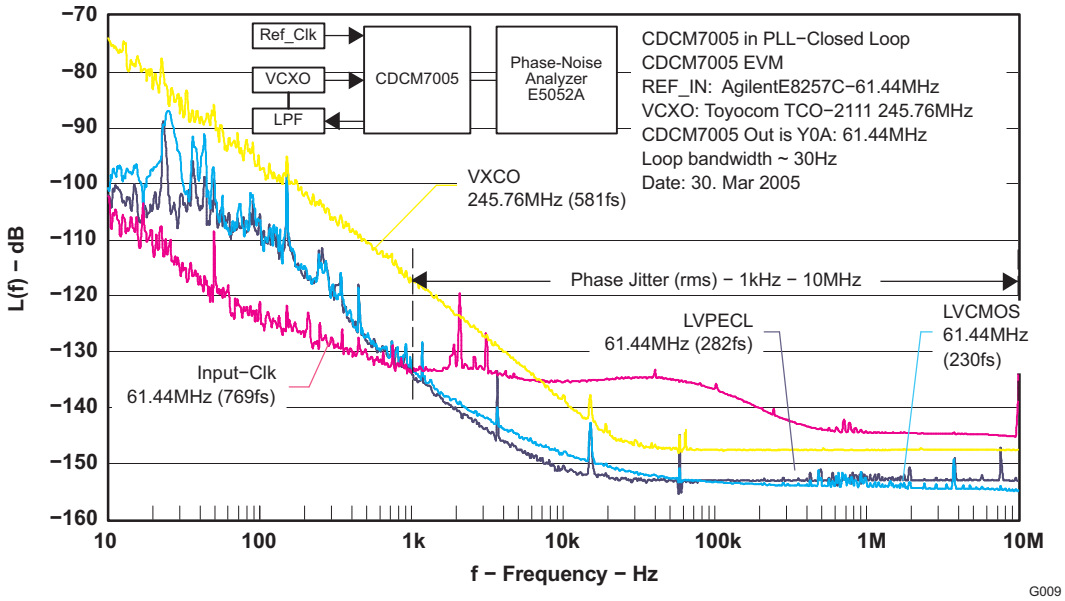

Figure 27. Phase Noise (61.44-MHz REF_IN and 61.44-MHz Output Frequency)

11 Power Supply Recommendations

CDCM7005 has a simple power scheme. Two power supplies are needed general VCC and analog AVCC. Both supplies should have the same voltage, with individual beads to isolate them. No special power sequencing is needed. A separate supply VCC_CP is used for the charge pump. This supply should match the VCO/VCXO supply but not to exceed the maximum recommended operating voltage of AVCC/VCC.

As PD pin is active low, It is recommended to ramp up the PD with the same time as VCC and AVCC or later. The ramp up rate of the PD should not be faster than the ramp up rate of VCC and AVCC.

12 Layout

12.1 Layout Guidelines

High frequency input signals should be routed through shortest paths possible.

Continuous ground plane should be spread under the high signal routes to minimize the current loops.

Supply bypass caps should be placed as close to the device. Do not have vias between the bypass caps and the device.

Keep differential traces together to keep noise injection as a common-mode signal.

Route differential traces around obstacles together, do not separate. Keep traces together with exact same length to keep delays equal.

Top layer routing of clock signals has less propagation delay, immunity to noise could be enhanced by having ground planes on the same layer away by 2x trace width. The magnetic radiation is also enhanced by this ground layer. Ensure multiple vias are utilized and placed near signal traces on the ground plane.

Copyright © 2005–2017, Texas Instruments Incorporated

12.2 Layout Example

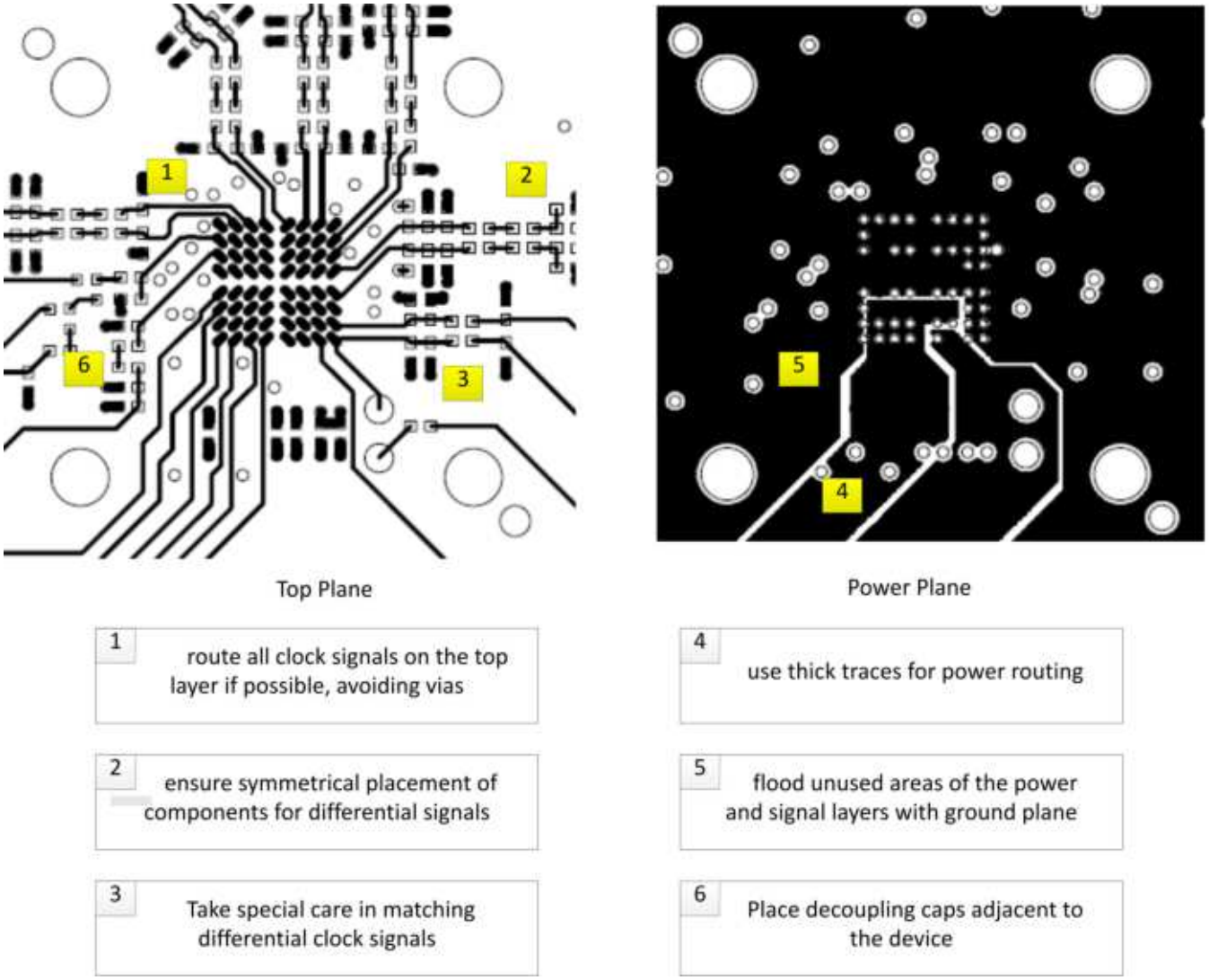

Figure 28. Layout Example, BGA Package

Layout Example (continued)

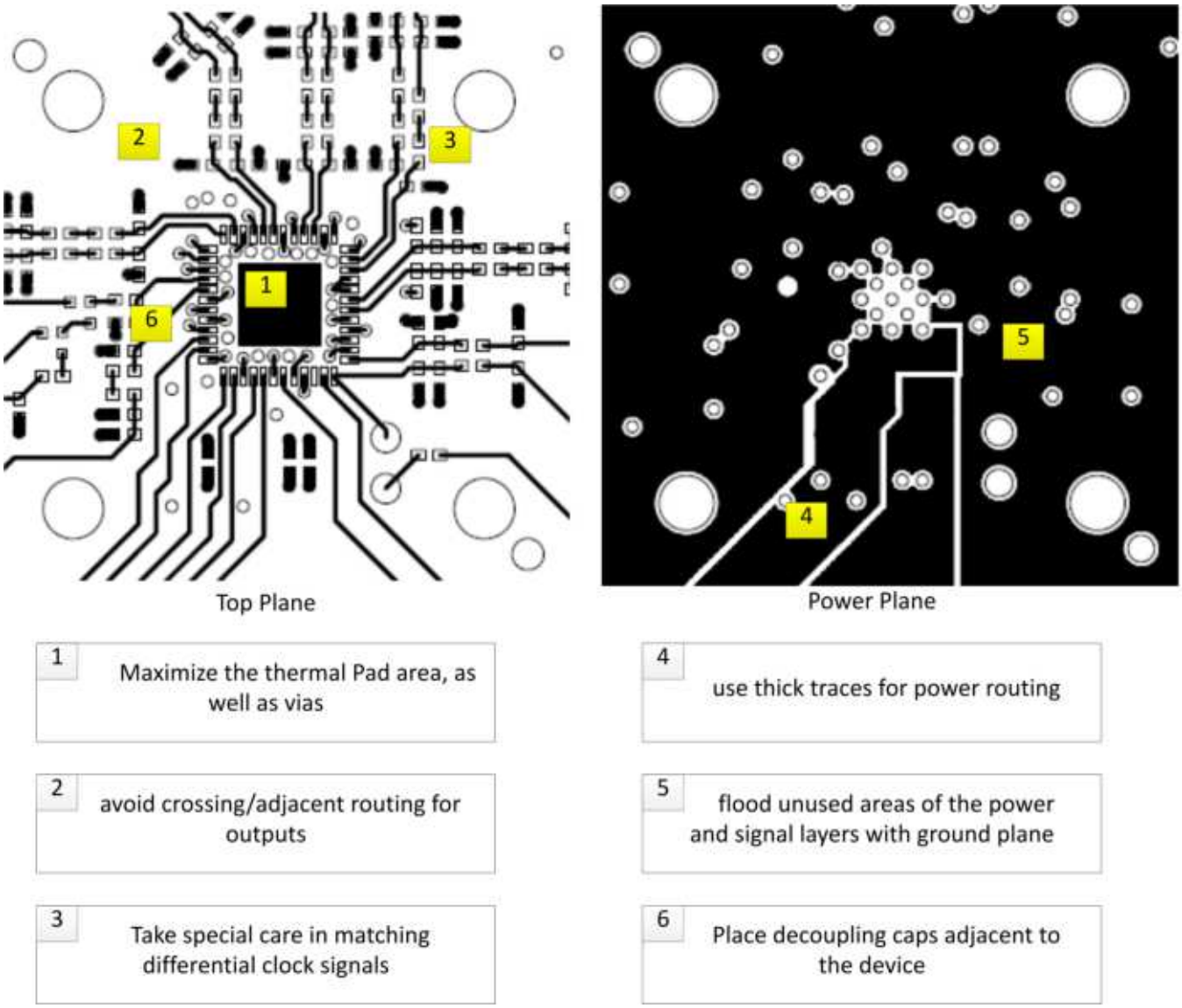

Figure 29. Layout Example, QFN Package

Copyright © 2005–2017, Texas Instruments Incorporated

13 Device and Documentation Support

13.1 Receiving Notification of Documentation Updates

To receive notification of documentation updates, navigate to the device product folder on ti.com. In the upper right corner, click on *Alert me* to register and receive a weekly digest of any product information that has changed. For change details, review the revision history included in any revised document.

13.2 Community Resources

The following links connect to TI community resources. Linked contents are provided "AS IS" by the respective contributors. They do not constitute TI specifications and do not necessarily reflect TI's views; see TI's Terms of Use.

TI E2E™ Online Community ***TI's Engineer-to-Engineer (E2E) Community.*** Created to foster collaboration among engineers. At e2e.ti.com, you can ask questions, share knowledge, explore ideas and help solve problems with fellow engineers.

Design Support ***TI's Design Support*** Quickly find helpful E2E forums along with design support tools and contact information for technical support.

13.3 Trademarks

E2E is a trademark of Texas Instruments.
All other trademarks are the property of their respective owners.

13.4 Electrostatic Discharge Caution

These devices have limited built-in ESD protection. The leads should be shorted together or the device placed in conductive foam during storage or handling to prevent electrostatic damage to the MOS gates.

13.5 Glossary

SLYZ022 — *TI Glossary*.

This glossary lists and explains terms, acronyms, and definitions.

14 Mechanical, Packaging, and Orderable Information

The following pages include mechanical, packaging, and orderable information. This information is the most current data available for the designated devices. This data is subject to change without notice and revision of this document. For browser-based versions of this data sheet, refer to the left-hand navigation.

PACKAGING INFORMATION

Orderable part number	Status (1)	Material type (2)	Package | Pins	Package qty | Carrier	RoHS (3)	Lead finish/ Ball material (4)	MSL rating/ Peak reflow (5)	Op temp (°C)	Part marking (6)
CDCM7005RGZR	Active	Production	VQFN (RGZ) | 48	2500 | LARGE T&R	Yes	NIPDAU	Level-3-260C-168 HR	-40 to 85	CDCM7005
CDCM7005RGZR.B	Active	Production	VQFN (RGZ) | 48	2500 | LARGE T&R	Yes	NIPDAU	Level-3-260C-168 HR	-40 to 85	CDCM7005
CDCM7005RGZRG4	Active	Production	VQFN (RGZ) | 48	2500 | LARGE T&R	Yes	NIPDAU	Level-3-260C-168 HR	-40 to 85	CDCM7005
CDCM7005RGZT	Active	Production	VQFN (RGZ) | 48	250 | SMALL T&R	Yes	NIPDAU	Level-3-260C-168 HR	-40 to 85	CDCM7005
CDCM7005RGZT.B	Active	Production	VQFN (RGZ) | 48	250 | SMALL T&R	Yes	NIPDAU	Level-3-260C-168 HR	-40 to 85	CDCM7005
CDCM7005RGZTG4	Active	Production	VQFN (RGZ) | 48	250 | SMALL T&R	Yes	NIPDAU	Level-3-260C-168 HR	-40 to 85	CDCM7005
CDCM7005ZVAR	Active	Production	BGA (ZVA) | 64	1000 | LARGE T&R	Yes	SNAGCU	Level-3-260C-168 HR	-40 to 85	CDCM7005
CDCM7005ZVAR.B	Active	Production	BGA (ZVA) | 64	1000 | LARGE T&R	Yes	SNAGCU	Level-3-260C-168 HR	-40 to 85	CDCM7005
CDCM7005ZVAT	Active	Production	BGA (ZVA) | 64	250 | SMALL T&R	Yes	SNAGCU	Level-3-260C-168 HR	-40 to 85	CDCM7005
CDCM7005ZVAT.B	Active	Production	BGA (ZVA) | 64	250 | SMALL T&R	Yes	SNAGCU	Level-3-260C-168 HR	-40 to 85	CDCM7005

(1) **Status:** For more details on status, see our product life cycle.

(2) **Material type:** When designated, preproduction parts are prototypes/experimental devices, and are not yet approved or released for full production. Testing and final process, including without limitation quality assurance, reliability performance testing, and/or process qualification, may not yet be complete, and this item is subject to further changes or possible discontinuation. If available for ordering, purchases will be subject to an additional waiver at checkout, and are intended for early internal evaluation purposes only. These items are sold without warranties of any kind.

(3) **RoHS values:** Yes, No, RoHS Exempt. See the TI RoHS Statement for additional information and value definition.

(4) **Lead finish/Ball material:** Parts may have multiple material finish options. Finish options are separated by a vertical ruled line. Lead finish/Ball material values may wrap to two lines if the finish value exceeds the maximum column width.

(5) **MSL rating/Peak reflow:** The moisture sensitivity level ratings and peak solder (reflow) temperatures. In the event that a part has multiple moisture sensitivity ratings, only the lowest level per JEDEC standards is shown. Refer to the shipping label for the actual reflow temperature that will be used to mount the part to the printed circuit board.

(6) **Part marking:** There may be an additional marking, which relates to the logo, the lot trace code information, or the environmental category of the part.

Multiple part markings will be inside parentheses. Only one part marking contained in parentheses and separated by a "~" will appear on a part. If a line is indented then it is a continuation of the previous line and the two combined represent the entire part marking for that device.

Important Information and Disclaimer: The information provided on this page represents TI's knowledge and belief as of the date that it is provided. TI bases its knowledge and belief on information provided by third parties, and makes no representation or warranty as to the accuracy of such information. Efforts are underway to better integrate information from third parties. TI has taken and continues to take reasonable steps to provide representative

and accurate information but may not have conducted destructive testing or chemical analysis on incoming materials and chemicals. TI and TI suppliers consider certain information to be proprietary, and thus CAS numbers and other limited information may not be available for release.

In no event shall TI's liability arising out of such information exceed the total purchase price of the TI part(s) at issue in this document sold by TI to Customer on an annual basis.

OTHER QUALIFIED VERSIONS OF CDCM7005 :

- Space : CDCM7005-SP

NOTE: Qualified Version Definitions:

- Space - Radiation tolerant, ceramic packaging and qualified for use in Space-based application

TAPE AND REEL INFORMATION

REEL DIMENSIONS

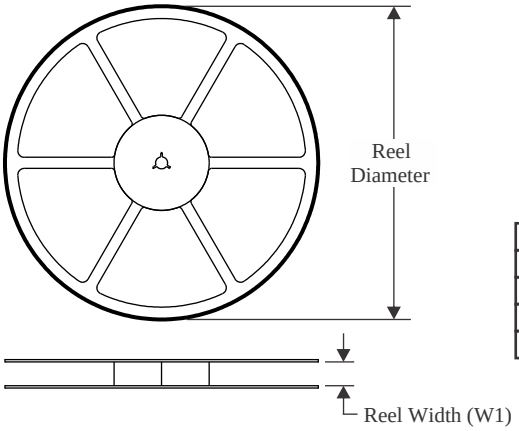

TAPE DIMENSIONS

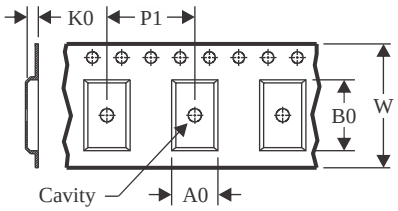

A0	Dimension designed to accommodate the component width
B0	Dimension designed to accommodate the component length
K0	Dimension designed to accommodate the component thickness
W	Overall width of the carrier tape
P1	Pitch between successive cavity centers

QUADRANT ASSIGNMENTS FOR PIN 1 ORIENTATION IN TAPE

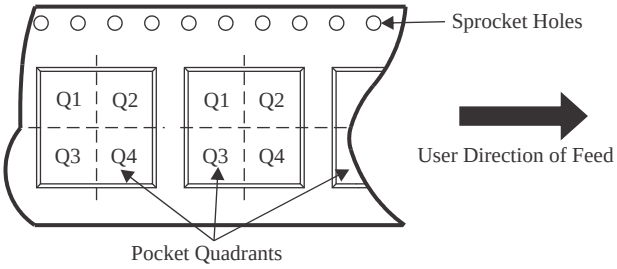

*All dimensions are nominal

Device	Package Type	Package Drawing	Pins	SPQ	Reel Diameter (mm)	Reel Width W1 (mm)	A0 (mm)	B0 (mm)	K0 (mm)	P1 (mm)	W (mm)	Pin1 Quadrant
CDCM7005RGZR	VQFN	RGZ	48	2500	330.0	16.4	7.3	7.3	1.5	12.0	16.0	Q2
CDCM7005ZVAR	BGA	ZVA	64	1000	330.0	16.4	8.3	8.3	2.25	12.0	16.0	Q1

TAPE AND REEL BOX DIMENSIONS

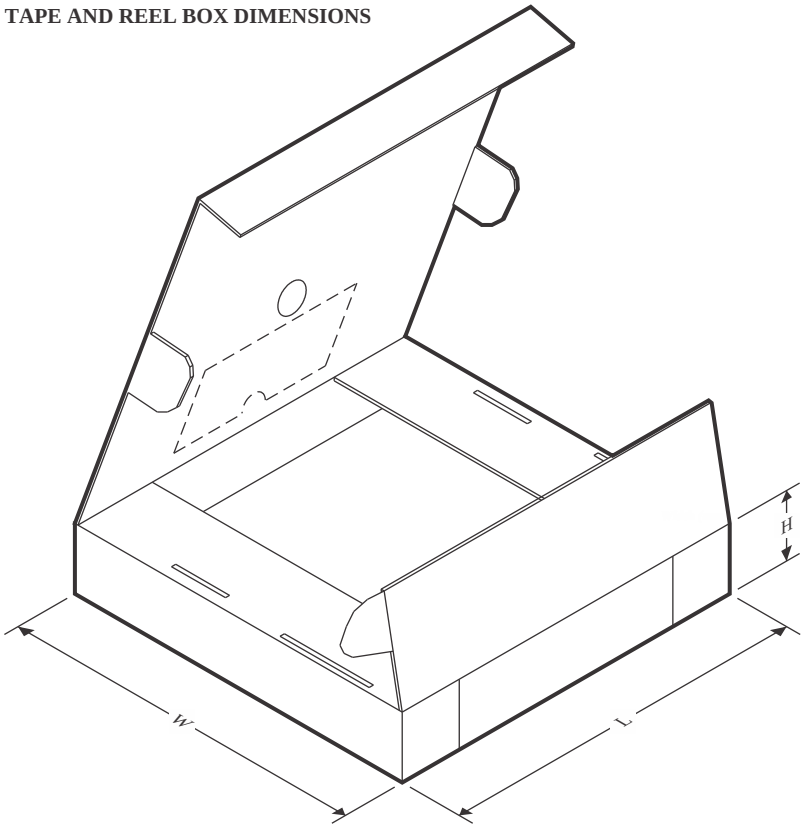

*All dimensions are nominal

Device	Package Type	Package Drawing	Pins	SPQ	Length (mm)	Width (mm)	Height (mm)
CDCM7005RGZR	VQFN	RGZ	48	2500	350.0	350.0	43.0
CDCM7005ZVAR	BGA	ZVA	64	1000	350.0	350.0	43.0

GENERIC PACKAGE VIEW

RGZ 48

VQFN - 1 mm max height

7 x 7, 0.5 mm pitch

PLASTIC QUADFLAT PACK- NO LEAD

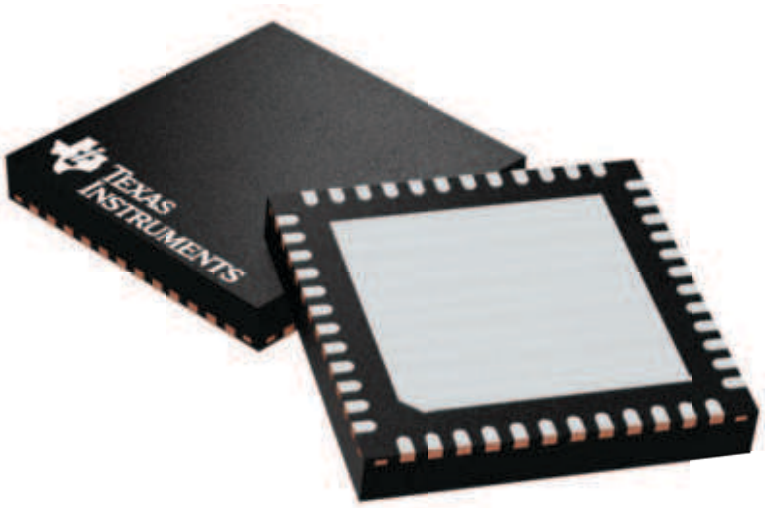

Images above are just a representation of the package family, actual package may vary.
Refer to the product data sheet for package details.

4224671/A

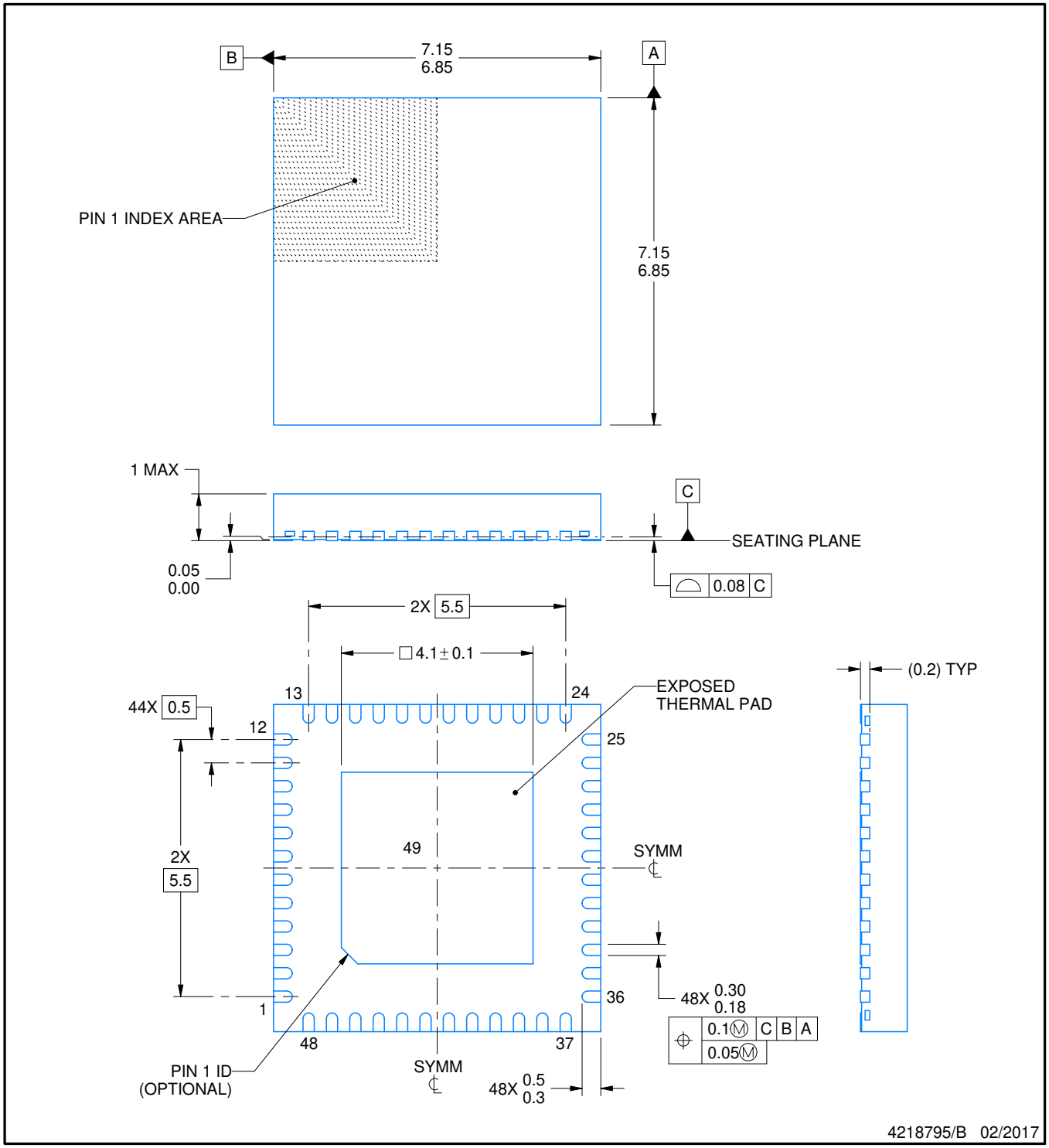

NOTES:

1. All linear dimensions are in millimeters. Any dimensions in parenthesis are for reference only. Dimensioning and tolerancing per ASME Y14.5M.
2. This drawing is subject to change without notice.
3. The package thermal pad must be soldered to the printed circuit board for thermal and mechanical performance.

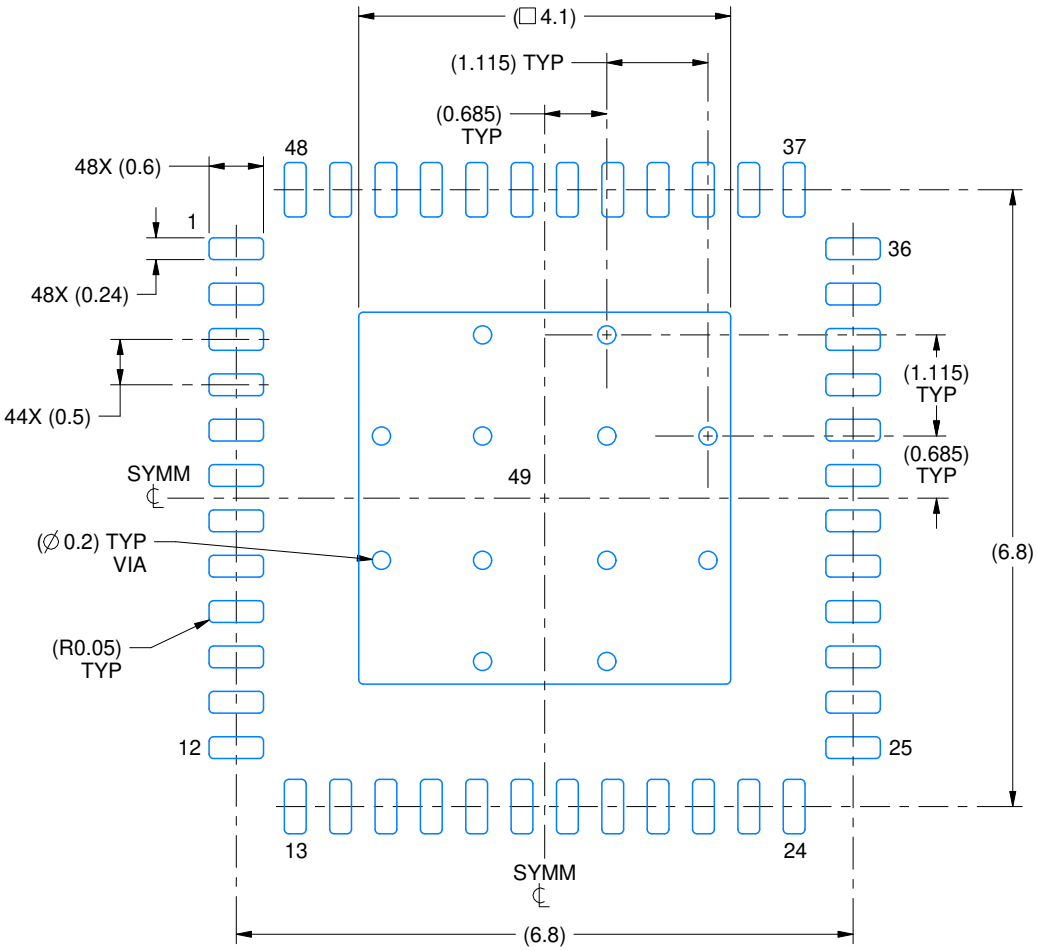

LAND PATTERN EXAMPLE
EXPOSED METAL SHOWN
SCALE:12X

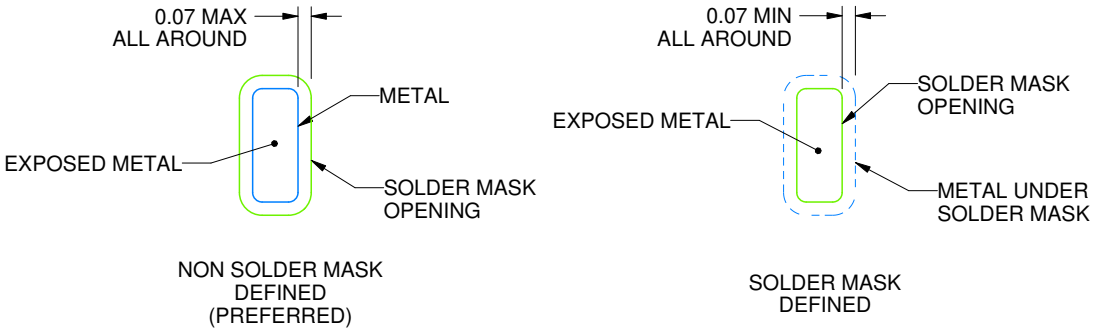

SOLDER MASK DETAILS

4218795/B 02/2017

NOTES: (continued)

4. This package is designed to be soldered to a thermal pad on the board. For more information, see Texas Instruments literature number SLUA271 (www.ti.com/lit/slua271).
5. Vias are optional depending on application, refer to device data sheet. If any vias are implemented, refer to their locations shown on this view. It is recommended that vias under paste be filled, plugged or tented.

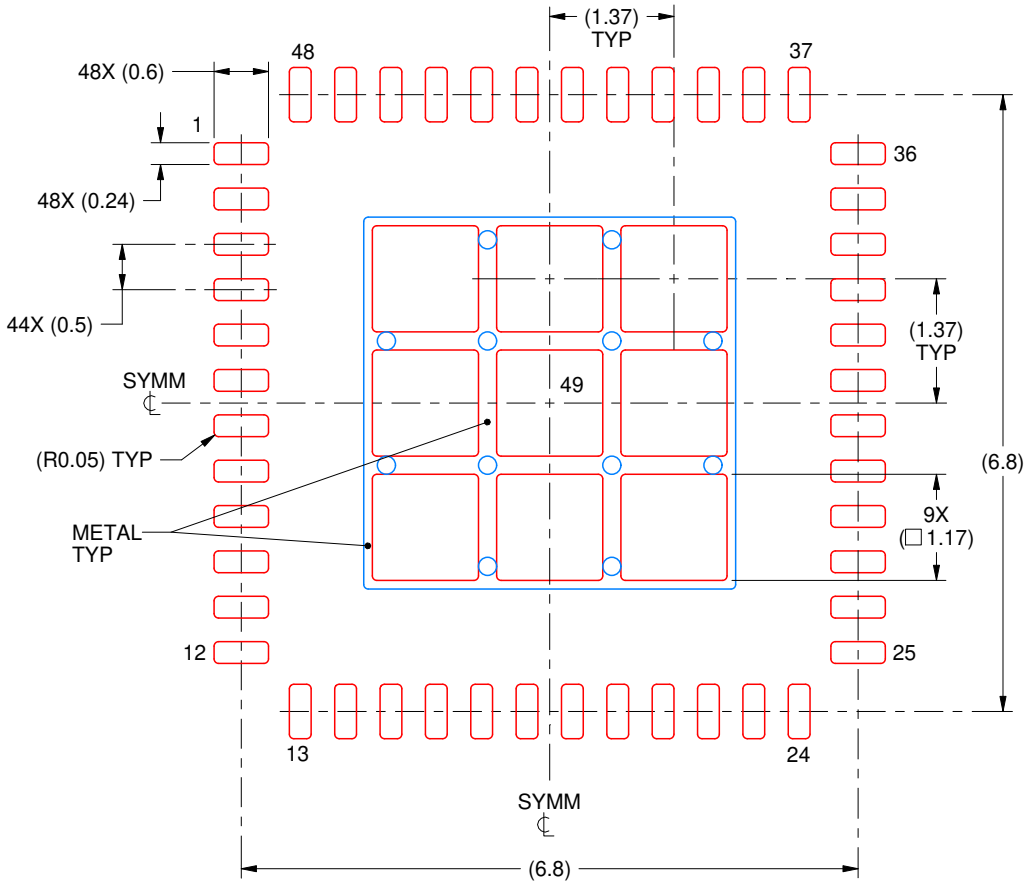

SOLDER PASTE EXAMPLE
BASED ON 0.125 mm THICK STENCIL

EXPOSED PAD 49
73% PRINTED SOLDER COVERAGE BY AREA UNDER PACKAGE
SCALE:12X

4218795/B 02/2017

NOTES: (continued)

6. Laser cutting apertures with trapezoidal walls and rounded corners may offer better paste release. IPC-7525 may have alternate design recommendations.

ZVA (S–PBGA–N64) PLASTIC BALL GRID ARRAY

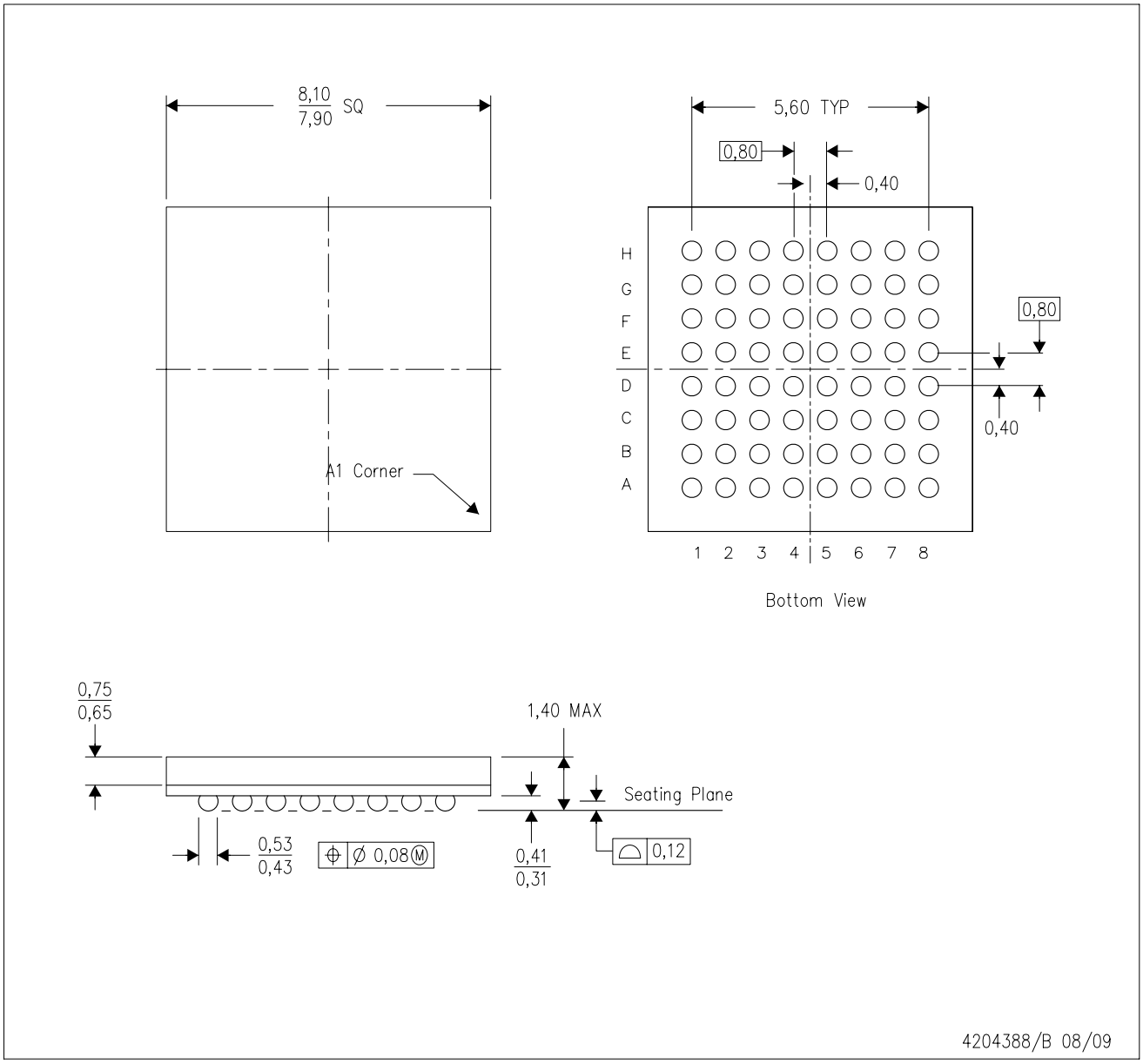

NOTES:
A. All linear dimensions are in millimeters. Dimensioning and tolerancing per ASME Y14.5M–1994.
B. This drawing is subject to change without notice.
C. This is a Pb–free package.

IMPORTANT NOTICE AND DISCLAIMER

TI PROVIDES TECHNICAL AND RELIABILITY DATA (INCLUDING DATASHEETS), DESIGN RESOURCES (INCLUDING REFERENCE DESIGNS), APPLICATION OR OTHER DESIGN ADVICE, WEB TOOLS, SAFETY INFORMATION, AND OTHER RESOURCES “AS IS” AND WITH ALL FAULTS, AND DISCLAIMS ALL WARRANTIES, EXPRESS AND IMPLIED, INCLUDING WITHOUT LIMITATION ANY IMPLIED WARRANTIES OF MERCHANTABILITY, FITNESS FOR A PARTICULAR PURPOSE OR NON-INFRINGEMENT OF THIRD PARTY INTELLECTUAL PROPERTY RIGHTS.

These resources are intended for skilled developers designing with TI products. You are solely responsible for (1) selecting the appropriate TI products for your application, (2) designing, validating and testing your application, and (3) ensuring your application meets applicable standards, and any other safety, security, regulatory or other requirements.

These resources are subject to change without notice. TI grants you permission to use these resources only for development of an application that uses the TI products described in the resource. Other reproduction and display of these resources is prohibited. No license is granted to any other TI intellectual property right or to any third party intellectual property right. TI disclaims responsibility for, and you fully indemnify TI and its representatives against any claims, damages, costs, losses, and liabilities arising out of your use of these resources.

TI’s products are provided subject to TI’s Terms of Sale, TI’s General Quality Guidelines, or other applicable terms available either on ti.com or provided in conjunction with such TI products. TI’s provision of these resources does not expand or otherwise alter TI’s applicable warranties or warranty disclaimers for TI products. Unless TI explicitly designates a product as custom or customer-specified, TI products are standard, catalog, general purpose devices.

TI objects to and rejects any additional or different terms you may propose.

Copyright © 2025, Texas Instruments Incorporated

Last updated 10/2025