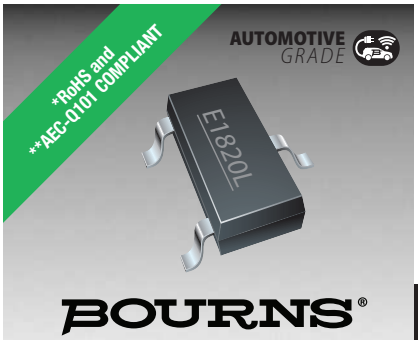

Features

- Protects one or two lines
- Unidirectional and bidirectional configurations
- ESD protection 30 kV max.
- RoHS compliant*
- AEC-Q101 compliant**

Applications

- Protection of power buses
- Protection of I/O interfaces
- Overvoltage transient protection
- Telecom, computer, industrial and consumer electronics applications

CDSOT23-T03-Q~T15C-Q - TVS Diode Array Series

General Information

Portable communications, computing and video equipment manufacturers are challenging the semiconductor industry to develop increasingly smaller electronic components.

Bourns offers Transient Voltage Suppressor Array diodes for surge and ESD protection applications, in compact chip package SOT23 size format. The TransientVoltage Supressor Array series offers a choice of voltage types as listed below. Bourns® Chip Diodes conform to JEDEC standards, are easy to handle on standard pick and place equipment and their flat configuration minimizes roll away.

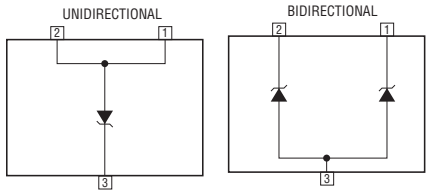

The Bourns device will assist in meeting IEC 61000-4-2 (ESD), IEC 61000-4-4 (EFT) and IEC 61000-4-5 (Surge) requirements.

Thermal Characteristics (@ T_A = 25 °C Unless Otherwise Noted)

Parameter	Symbol	Value	Unit
Ambient Temperature	T_A	-55 to +150	°C
Storage Temperature	T_{STG}	-55 to +150	°C

Additional Information

Click these links for more information:

PRODUCT SELECTOR | TECHNICAL LIBRARY | INVENTORY | SAMPLES | CONTACT

Electrical Characteristics (@ T_A = 25 °C Unless Otherwise Noted)

Parameter	Symbol	CDSOT23-			Unit
		Unidirectional	Bidirectional	Bidirectional	
		T03-Q	T08C-Q	T15C-Q	
Maximum Working Peak Voltage	V_{WM}	3.3	8.0	15.0	V
Minimum Breakdown Voltage @ 1 mA	V_{BR}	4.0	8.5	16.7	V
Maximum Clamping Voltage V_C @ I_P = 1 A (1)	V_C	7.0	13.4	24.0	V
Typical Clamping Voltage @ 8/20 μs V_C = I_{PP} (1)	V_C	10.9 V @ 43 A	16.9 V @ 34 A	25.0 V @ 15 A	V
Typical Peak Pulse Power (t_p @ 8/20 μs) (1)	P_{PP}	500			W
Maximum Leakage Current @ V_{WM}	I_D	125	10	1	μA
Typical Capacitance @ 0 V, 1 MHz	$C_{j(SD)}$	500	150	60	pF
ESD Protection (per IEC 61000-4-2) Contact - Max. Air - Max.	ESD	±30 ±30			kV

Notes: (1) See Pulse Wave Form.
Part numbers with a “C” suffix are bidirectional devices, i.e., CDSOT23-T08C-Q & CDSOT23-T15C-Q.

CALIFORNIA WARNING: Can expose you to lead, a carcinogen and reproductive toxicant.
See www.P65Warnings.ca.gov

* RoHS Directive 2015/863, Mar 31, 2015 and Annex.
** ”Q” part number suffix indicates AEC-Q101 compliance.
Specifications are subject to change without notice.
Users should verify actual device performance in their specific applications.
The products described herein and this document are subject to specific legal disclaimers as set forth on the last page of this document, and at www.bourns.com/docs/legal/disclaimer.pdf.

Performance Graph - Pulse Waveform

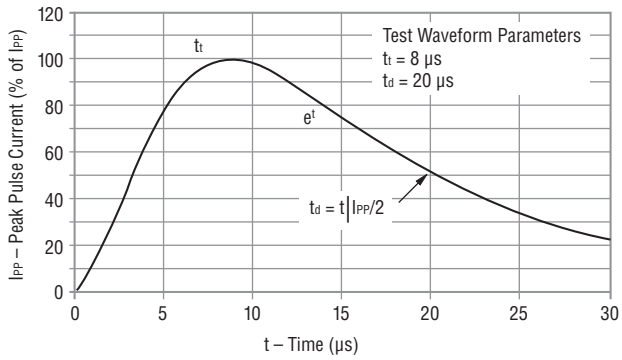

How to Order

CD SOT23 - T 03 C - Q

Common Code
Chip Diode

Package
SOT23 = SOT-23 Package

Model
T = Transient Voltage Suppressor

Working Peak Voltage
03 = 3.3 V_{WM} (Volts)
08 = 8 V_{WM} (Volts)
15 = 15 V_{WM} (Volts)

Suffix
C = Bidirectional Diode

AEC-Q101 Suffix
Q = AEC-Q101 Compliant

Block Diagram

The device block diagrams below include the pin names and basic electrical connections associated with each channel.

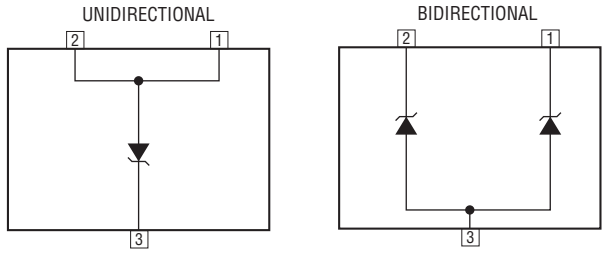

Environmental Specifications

Moisture Sensitivity Level 1
ESD Classification (HBM) 3A

Typical Part Marking

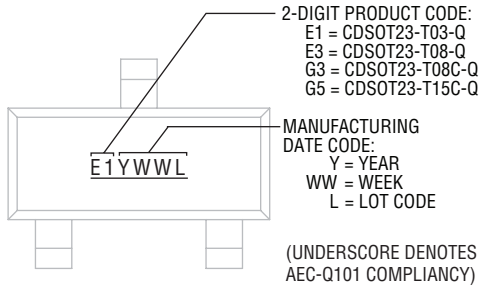

Specifications are subject to change without notice.
Users should verify actual device performance in their specific applications.
The products described herein and this document are subject to specific legal disclaimers as set forth on the last page of this document, and at www.bourns.com/docs/legal/disclaimer.pdf.

Product Dimensions

This is a molded JEDEC SOT-23 package with 100 % Matte Sn plating on the lead frame. It weighs approximately 0.6 g and has a flammability rating of UL 94V-0.

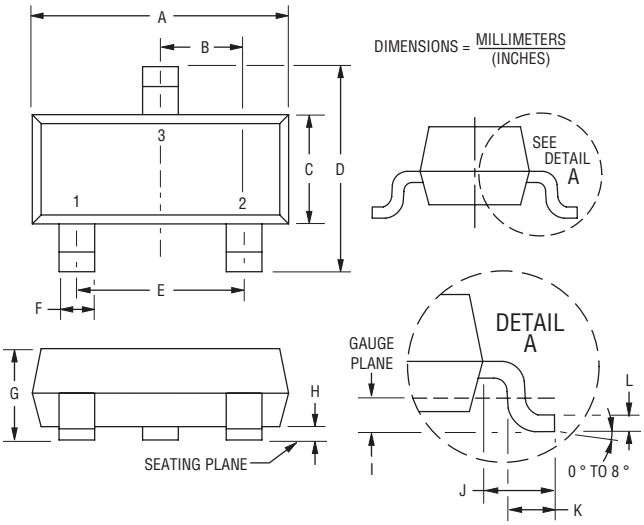

Dimensions	
A	2.80 - 3.00 (0.110 - 0.118)
B	0.95 (0.037) BSC
C	1.20 - 1.40 (0.047 - 0.055)
D	2.10 - 2.49 (0.083 - 0.098)
E	1.90 (0.075) BSC
F	0.30 - 0.50 (0.012 - 0.019)
G	0.89 - 1.17 (0.035 - 0.046)
H	0.05 - 0.015 (0.002 - 0.006)
I	0.25 (0.010) BSC
J	0.46 - 0.64 (0.018 - 0.025)
K	0.40 - 0.58 (0.016 - 0.023)
L	0.08 - 0.20 (0.003 - 0.008)

Recommended Footprint

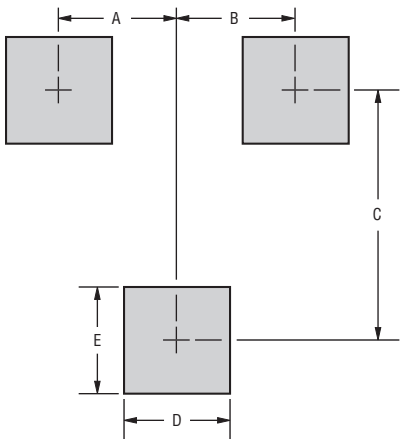

Dimensions	
A	0.95 (0.037)
B	0.95 (0.037)
C	2.00 (0.079)
D	0.85 (0.033)
E	0.85 (0.033)

Specifications are subject to change without notice.
Users should verify actual device performance in their specific applications.
The products described herein and this document are subject to specific legal disclaimers as set forth on the last page of this document, and at www.bourns.com/docs/legal/disclaimer.pdf.

Packaging Information

The surface mount product is packaged in an 12 mm x 8 mm tape and reel format per EIA-481 standard.

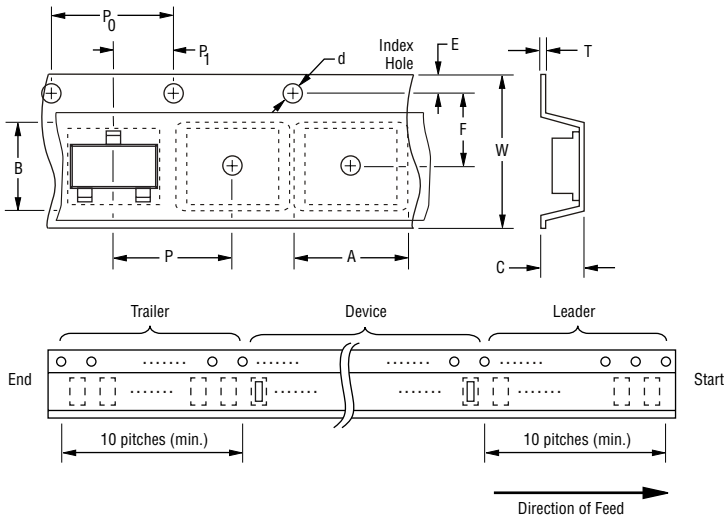

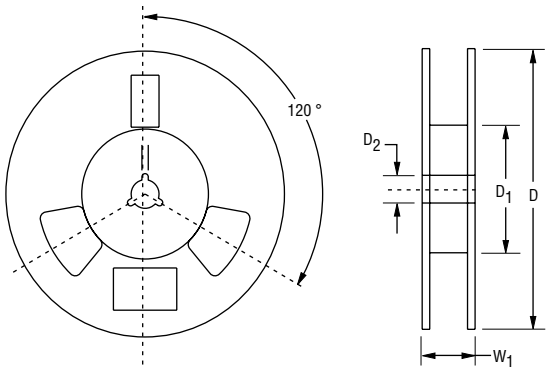

DIMENSIONS: MM / (INCHES)

Devices are packed in accordance with EIA standard RS-481-A.

Item	Symbol	SOT-23
Carrier Width	A	2.25 ± 0.10 (0.088 ± 0.004)
Carrier Length	B	2.34 ± 0.10 (0.092 ± 0.004)
Carrier Depth	C	1.22 ± 0.10 (0.048 ± 0.004)
Sprocket Hole	d	1.55 ± 0.05 (0.061 ± 0.002)
Reel Outside Diameter	D	178 (7.008)
Reel Inner Diameter	D_1	50.0 (1.969) MIN.
Feed Hole Diameter	D_2	13.0 ± 0.20 (0.512 ± 0.008)
Sprocket Hole Position	E	1.75 ± 0.10 (0.069 ± 0.004)
Punch Hole Position	F	3.50 ± 0.05 (0.138 ± 0.002)
Punch Hole Pitch	P	4.00 ± 0.10 (0.157 ± 0.004)
Sprocket Hole Pitch	P_0	4.00 ± 0.10 (0.157 ± 0.004)
Embossment Center	P_1	2.00 ± 0.05 (0.079 ± 0.002)
Overall Tape Thickness	T	0.20 ± 0.10 (0.008 ± 0.004)
Tape Width	W	8.00 ± 0.20 (0.315 ± 0.008)
Reel Width	W_1	14.4 (0.567) MAX.
Quantity per Reel	--	3,000

BOURNS®

Asia-Pacific: Tel: +886-2 2562-4117 • Email: asiacus@bourns.com
Europe: Tel: +36 88 885 877 • Email: eurocus@bourns.com
Mexico: Tel: +52 614 478 0400 • Email: mexicus@bourns.com
The Americas: Tel: +1-951 781-5500 • Email: americus@bourns.com
www.bourns.com

REV. 02/26

Specifications are subject to change without notice.
Users should verify actual device performance in their specific applications.
The products described herein and this document are subject to specific legal disclaimers as set forth on the last page of this document, and at www.bourns.com/docs/legal/disclaimer.pdf.

Legal Disclaimer Notice

BOURNS®

This legal disclaimer applies to purchasers and users of Bourns® products manufactured by or on behalf of Bourns, Inc. and its affiliates (collectively, "Bourns").

Unless otherwise expressly indicated in writing, Bourns® products and data sheets relating thereto are subject to change without notice. Users should check for and obtain the latest relevant information and verify that such information is current and complete before placing orders for Bourns® products.

The characteristics and parameters of a Bourns® product set forth in its data sheet are based on laboratory conditions, and statements regarding the suitability of products for certain "typical" applications are based on Bourns' knowledge of typical requirements in generic applications. Bourns assumes that "typical" applications include failsafe/backup features to address critical risks to users and are designed to allow rework of Bourns® product to avoid scrap of a device solely due to malfunctioning Bourns® product. The characteristics and parameters of a Bourns® product in a user application may vary from the data sheet characteristics and parameters due to (i) the combination of the Bourns® product with other components in the user's application, or (ii) the environment of the user application itself. The characteristics and parameters of a Bourns® product also can and do vary in different applications and actual performance may vary over time. Thus, users should always verify the actual performance of the Bourns® product in their specific devices and applications and make their own independent judgments regarding the suitability of Bourns® product and the amount of additional test margin to design into their device or application to compensate for differences between laboratory and real-world conditions.

Unless Bourns has explicitly designated an individual Bourns® product as meeting the requirements of a particular industry standard (e.g., IATF 16949) or a particular qualification (e.g., UL listed or recognized), Bourns is not responsible for any failure of an individual Bourns® product to meet the requirements of such industry standard or particular qualification even if such industry standard or qualification is a "state of art". Users of Bourns® products are responsible for ensuring compliance with safety-related requirements and standards applicable to their devices or applications.

Bourns® products are not recommended, authorized or intended for use in applications where failure or malfunction may result in personal injury, death, or severe property or environmental damage, such as without limitation nuclear, life-critical medical and certain automotive and aviation applications. Except as set forth in the bullet points below or unless expressly and specifically approved in writing on a case-by-case basis by an authorized Bourns' representative, use of any Bourns® products in such unauthorized high-risk applications is at the user's sole risk.

- Bourns considers implantable/invasive devices and devices/procedures designed as life-supporting or life-sustaining by the U.S. Food and Drug Administration or equivalent organizations outside of the United States as "life-critical" medical applications. Bourns expressly identifies those Bourns® standard products that are suitable for use in typical medical applications that are not life-critical in its publication entitled "Bourns Medical Grade Component Guide."

- Bourns expressly identifies those Bourns® standard products that are suitable for use in typical automotive applications associated with any Automate Safety Integrity Level (ASIL) in its publication entitled "Bourns Automotive Grade Component Guide." Bourns' designation of Bourns® product as compliant with the AEC-Q standard does not by itself mean that Bourns has approved such product for use in an automotive application.

- Bourns expressly identifies Bourns® standard products that are suitable for use in the typical aviation applications/systems requiring System Design Assurance Level (RTCA DO-254 DAL) of C, D or E in its publication entitled "Bourns Civilian Aerospace/Aviation Grade Component Guide." Bourns does not test its products for compliance with United States Federal Aviation Administration standards or any other generally equivalent governmental organization standard applicable to products designed or manufactured for use in aviation applications. Use of Bourns® standard components in aviation applications associated with RTCA DO-254 DAL A or B without proper approval noted above shall be at the user's sole risk.

- Bourns will review and authorize on a case-by-case basis the use of Bourns® standard products which are at least AEC-Q compliant in space-related civil applications (rockets, satellites) with a negotiated cross-waiver and indemnity agreement.

The use and level of testing applicable to Bourns® custom products shall be negotiated on a case-by-case basis by Bourns and the user for which such Bourns® custom products are specially designed. Absent a written agreement between Bourns and the user regarding the use and level of such testing, the above provisions applicable to Bourns® standard products shall also apply to such Bourns® custom products.

Use of Bourns® products or Bourns' technology in military/defense applications must be reviewed with Bourns for compliance with applicable export control laws and embargoes. Users shall not sell, transfer, export or re-export (which includes transfers within a country) any Bourns® products or technology or technical data for use in activities which involve the design, development, production, use or stockpiling of nuclear, chemical or biological weapons or missiles, nor shall they use Bourns® products or technology or technical data in any facility which engages in activities relating to such devices. Further, Bourns® products and Bourns' technology and technical data may not under any circumstance be exported or re-exported to countries subject to international sanctions or embargoes. Bourns® products and technology may not, without prior authorization from Bourns and/or the Government of a country where such product/technology is designed and/or manufactured, be resold, transferred, or re-exported (including within the same country) to any party not eligible to receive commodities, software, and technical data originating in such country.

To the maximum extent permitted by applicable law, Bourns disclaims (i) any and all liability for special, punitive, consequential, incidental or indirect damages or lost revenues or lost profits, and (ii) any and all implied warranties (those not based on parameters specified in Bourns' data sheets and/or specifications), including implied warranties of fitness for particular purpose, non-infringement and merchantability.

For your convenience, copies of this Legal Disclaimer Notice with German, Spanish, Japanese, Traditional Chinese and Simplified Chinese bilingual versions are available at:

Web Page: https://www.bourns.com/legal/disclaimers-terms-and-policies
PDF: https://www.bourns.com/docs/Legal/disclaimer.pdf