Heat Pipe Heatspreader

conga-TS170/HSP

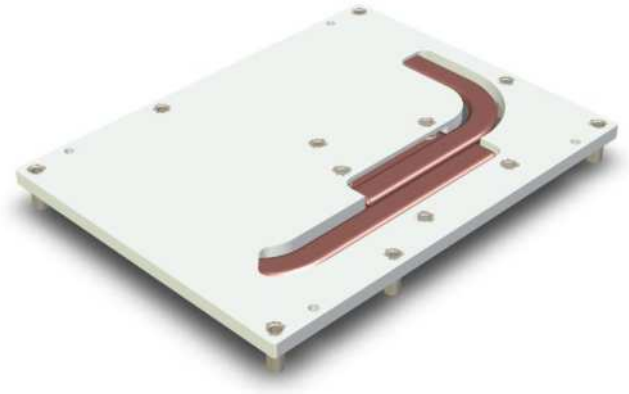

- congatec standard heatspreader for high performance COM Express Type 6 modules
- Supports CPUs up to 45W TDP
- Heatpipe based cooling for improved heat transfer
- Compliant to the PICMG COM Express Specification
- Bore hole and threaded standoff variants

COM Express®

The heat from the CPU/PCH transfers through a phase change material that melts at ~45°C. Then the heat from the CPU is transmitted through a copper heatstack that is attached to two high conductive heatpipes that transfer the heat to the heatplate. The heat dissipation of the PCH is much lower compared to the CPU. It's transferred through an aluminum heatstack that uses a 2mm thick thermal pad to attach it directly to the heatplate. The heatplate, heatpipes and copper heatstack are soldered together with low temperature RoHS compliant soldering paste.

Thermal contact between the CPU and the heatplate is ensured by four springs that generate the proper force onto the CPU die. Thermal contact between the PCH and the heatplate is ensured by using a thermal pad that generates the proper force required for optimized heat transfer on the PCH die.

The heatspreader is designed to be mounted via four countersunk holes – as defined by the COM Express specification. It acts as a high efficient thermal coupling device between the module and the system's metal housing or any other custom cooling architecture.

conga-TS170/HSP | Construction Details

Heatplate
- Aluminum EN AW-6060 T66 (AlMgSi0.5)
- Thermal conductivity 205W/mK
- Nickel plated

Standoffs
- Tempered medium carbon steel
- Bore hole 2.7mm or thread M2.5
- Nickel plated

Heatpipes
- Copper casing
- Thermal conductivity 1500W/mK
- Sintered copper powder wick structure
- Nickel plated

Springs
- Spring steel
- Spring constant 6N/mm
- Nickel plated

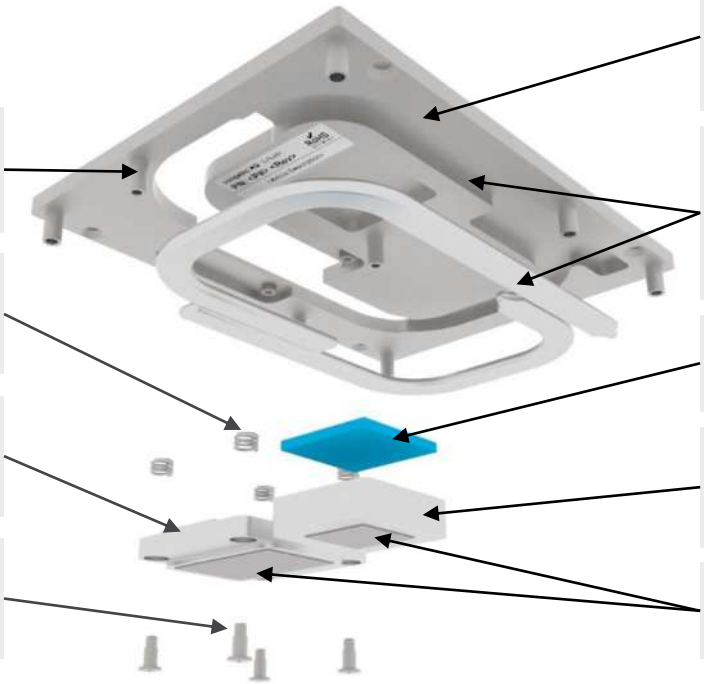

Thermal Pad
- Thickness 2mm
- Thermal conductivity 1.9W/mK

Heatstack CPU
- Copper C1100
- Thermal conductivity 385W/mK
- Nickel plated

Heatstack PCH
- Aluminum EN AW-6063 T5
- Thermal conductivity 200W/mK
- Nickel plated

Collar Screws
- Tempered medium carbon steel
- M2.5 thread
- Nickel plated

Phase Change Material
- Thermal conductivity 3.4W/mK
- Melting temperature ~45°C

conga-TS170/HSP | Drawings

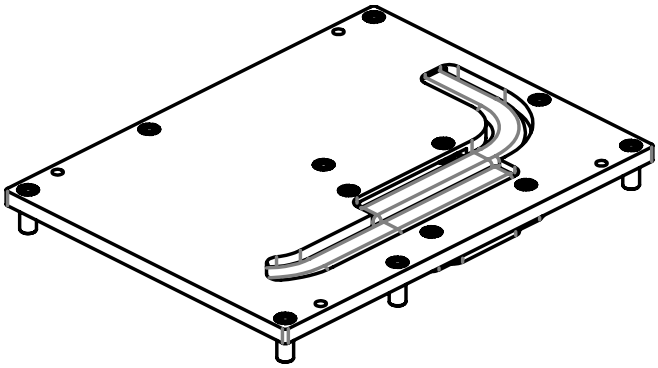

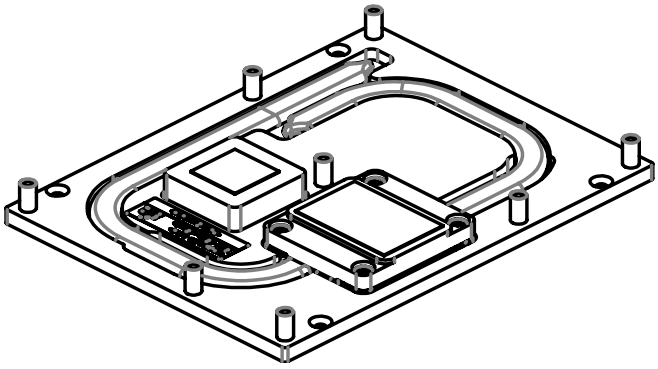

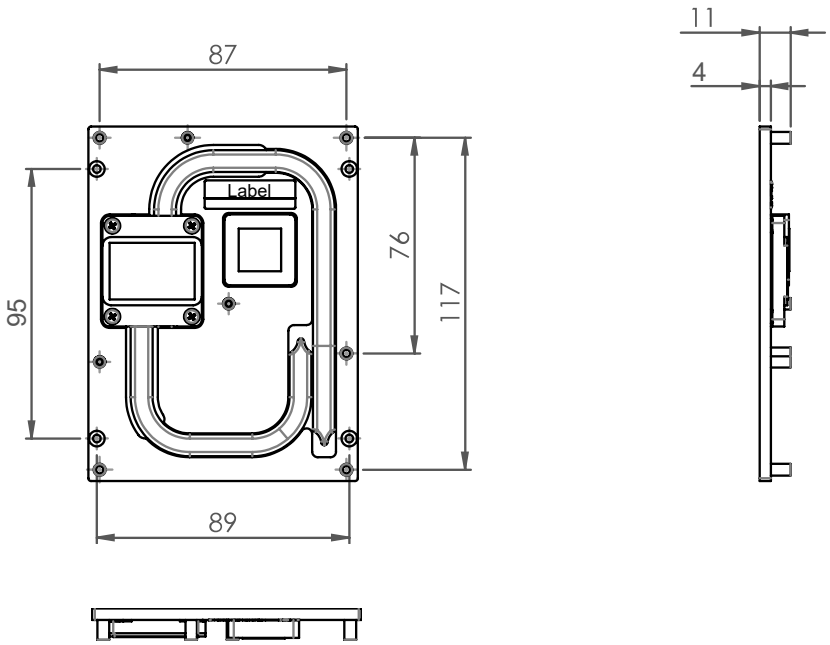

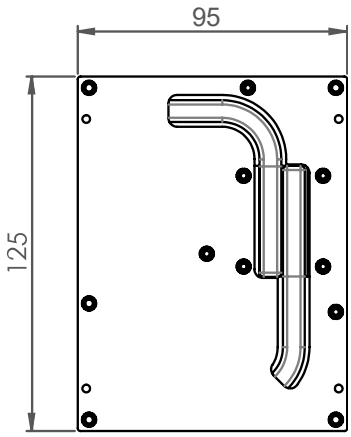

Mounting standoffs and holes are placed symmetrically [mm]

conga-TS170/HSP | Mounting Options

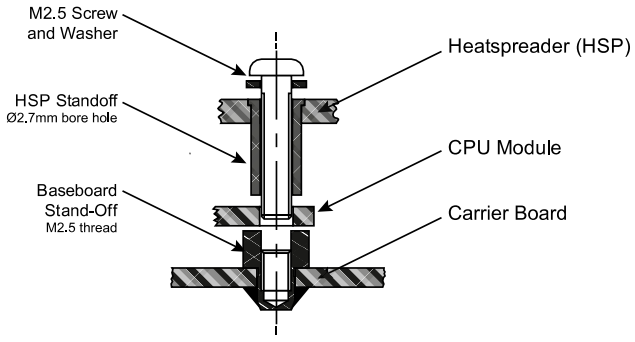

Top mounting scenario uses the bore hole version heatspreader and requires threaded standoffs on the carrier board.

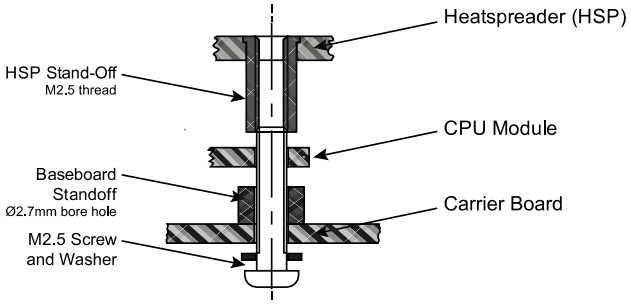

Bottom mounting scenario uses the threaded version heatspreader and requires bore hole standoffs on the carrier board.

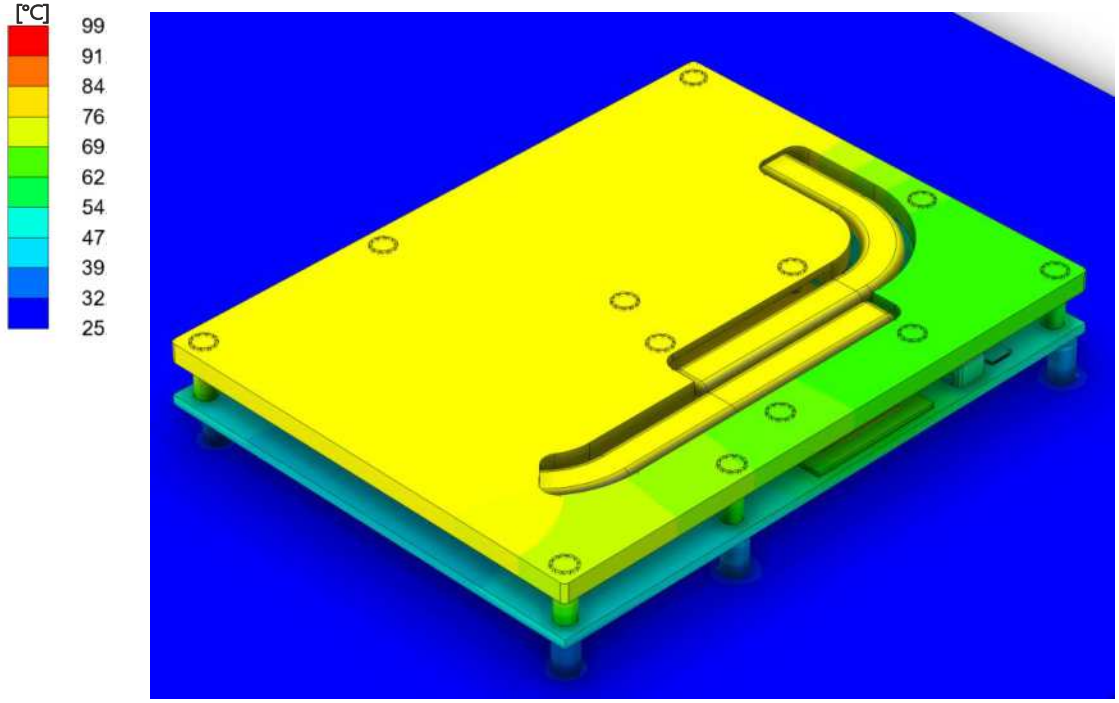

Ambient ϑ = 25°C
CPU P = 25W

Simulation of the conga-TS170/HSP at ambient temperature of 25°C, CPU dissipating 25W of heat after a short time of operation.

It shows that the heat mainly generated by the CPU is distributed evenly across the whole heatspreader. This ensures a highly efficient thermal coupling between the module and the system's metal housing or any other custom cooling architecture.

conga-TS170/HSP | Overview

Compatibility	The conga-TS170/HSP is compatible with all conga-TS170, conga-TS175 and conga-TS370 COM Express modules
Size	COM Express Basic size (95 x 125 mm) COM Express specification compliant
Weight	190g
Packaging	Single packaging Bulk packaging (available on request)
Accessories	Mounting materials included Bore hole version: 9pcs flat washer, Ø2.7/5mm, h0.5mm, stainless steel 5pcs machined screw, M2.5x20mm, Phillips pan head A2-70 4pcs machined screw, M2.5x6mm, Phillips pan head A2-70 Threaded version: 9pcs flat washer, Ø2.7/5mm, h0.5mm, stainless steel 5pcs machined screw, M2.5x16mm, Phillips pan head A2-70 4pcs machined screw, M2.5x6mm, Phillips pan head A2-70
RoHS	Directive 2011/65/EU and 2015/863/EU compliant

conga-TS170/HSP | Order Information

Article	PN	Description
conga-TS170/HSP-HP-B	045934	Standard heatspreader for high performance COM Express modules conga-TS170/TS175/TS370 with integrated heat pipes. All standoffs are with 2.7mm bore hole.
conga-TS170/HSP-HP-T	045935	Standard heatspreader for high performance COM Express modules conga-TS170/TS175/TS370 with integrated heat pipes. All standoffs are M2.5mm thread.

© 2019 congatec AG. All rights reserved.

All data is for information purposes only. Although all the information contained within this document is carefully checked, no guarantee of correctness is implied or expressed. Product names, logos, brands, and other trademarks featured or referred are the property of their respective trademark holders. These trademark holders are not affiliated with congatec AG. Rev. Oct 21, 2019 CE