CSD18509Q5B N-Channel NexFET™ Power MOSFETs

1 Features

- Ultra-Low On Resistance
- Low Thermal Resistance
- Avalanche Rated
- Logic Level
- Pb Free Terminal Plating
- RoHS Compliant
- Halogen Free
- SON 5-mm × 6-mm Plastic Package

2 Applications

- DC-DC Conversion
- Secondary Side Synchronous Rectifier
- Motor Control

3 Description

This 40 V, 1 mΩ, SON 5 x 6 NexFET™ power MOSFET has been designed to minimize losses in power conversion applications.

Top View

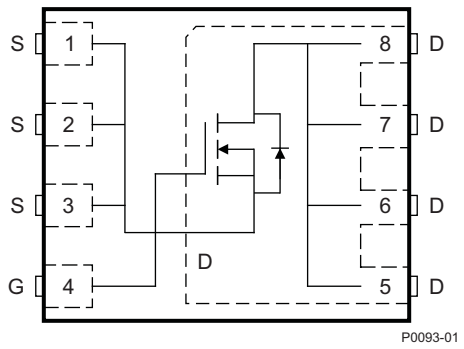

P0093-01

Product Summary

T_A = 25°C		TYPICAL VALUE		UNIT
V_{DS}	Drain-to-Source Voltage	40		V
Q_g	Gate Charge Total (10 V)	150		nC
Q_{gd}	Gate Charge Gate to Drain	17		nC
$R_{DS(on)}$	Drain-to-Source On Resistance	V_{GS} = 4.5 V	1.3	mΩ
		V_{GS} = 10 V	1.0	mΩ
$V_{GS(th)}$	Threshold Voltage	1.8		V

Ordering Information[1]

Device	Qty	Media	Package	Ship
CSD18509Q5B	2500	13-Inch Reel	SON 5 × 6 mm Plastic Package	Tape and Reel
CSD18509Q5BT	250	7-Inch Reel		

(1) For all available packages, see the orderable addendum at the end of the data sheet.

Absolute Maximum Ratings

T_A = 25°C		VALUE	UNIT
V_{DS}	Drain-to-Source Voltage	40	V
V_{GS}	Gate-to-Source Voltage	±20	V
I_D	Continuous Drain Current (Package limited)	100	A
	Continuous Drain Current (Silicon limited), T_C = 25°C	299	
	Continuous Drain Current[1]	38	
I_{DM}	Pulsed Drain Current, T_A = 25°C[2]	400	A
P_D	Power Dissipation[1]	3.1	W
	Power Dissipation, T_C = 25°C	195	
T_J, T_{stg}	Operating Junction and Storage Temperature Range	–55 to 150	°C
E_{AS}	Avalanche Energy, single pulse I_D = 83, L = 0.1 mH, R_G = 25 Ω	345	mJ

(1) Typical $R_{\theta JA}$ = 40°C/W on a 1-inch², 2-oz. Cu pad on a 0.06-inch thick FR4 PCB.

(2) Max $R_{\theta JC}$ = 0.8°C/W, Pulse duration ≤100 µs, duty cycle ≤1%

$R_{DS(on)}$ vs V_{GS}

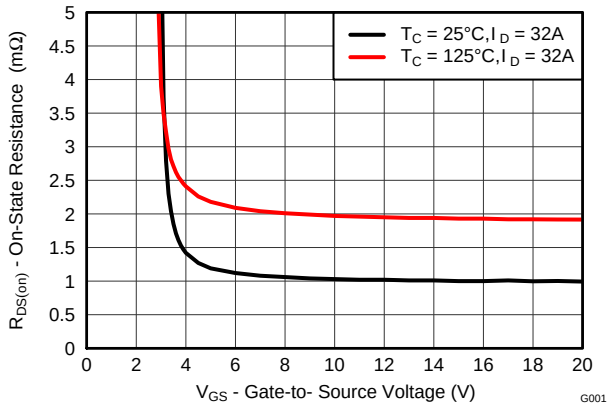

G001

Gate Charge

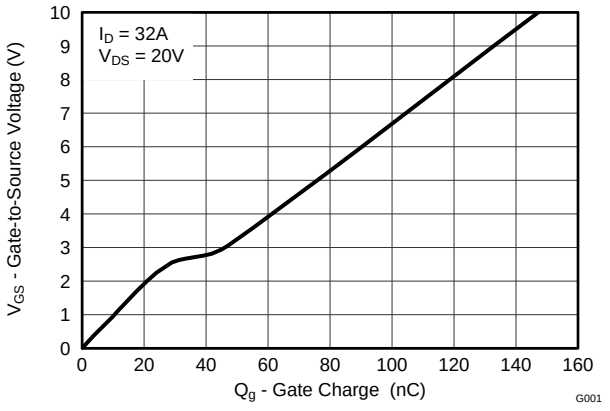

G001

An IMPORTANT NOTICE at the end of this data sheet addresses availability, warranty, changes, use in safety-critical applications, intellectual property matters and other important disclaimers. PRODUCTION DATA.

Table of Contents

1 Features 1
2 Applications 1
3 Description 1
4 Revision History 2
5 Specifications 3
5.1 Electrical Characteristics 3
5.2 Thermal Information 3
5.3 Typical MOSFET Characteristics 4
6 Device and Documentation Support 7
6.1 Receiving Notification of Documentation Updates 7
6.2 Community Resources 7
6.3 Trademarks 7
6.4 Electrostatic Discharge Caution 7
6.5 Glossary 7
7 Mechanical, Packaging, and Orderable Information 8
7.1 Q5B Package Dimensions 8
7.2 Recommended PCB Pattern 9
7.3 Recommended Stencil Pattern 9
7.4 Q5B Tape and Reel Information 10

4 Revision History

Changes from Original (June 2014) to Revision A **Page**

- Added the *Receiving Notification of Documentation Updates* and *Community Resources* sections to *Device and Documentation Support*. 7
- Changed the dimension between pads 3 and 4 from 0.028 inches: to 0.050 inches in the *Recommended PCB Pattern* section diagram 9

Copyright © 2014–2017, Texas Instruments Incorporated

5 Specifications

5.1 Electrical Characteristics

(T_A = 25°C unless otherwise stated)

PARAMETER		TEST CONDITIONS	MIN	TYP	MAX	UNIT
STATIC CHARACTERISTICS						
BV_{DSS}	Drain-to-Source Voltage	V_{GS} = 0 V, I_D = 250 µA	40			V
I_{DSS}	Drain-to-Source Leakage Current	V_{GS} = 0 V, V_{DS} = 32 V			1	µA
I_{GSS}	Gate-to-Source Leakage Current	V_{DS} = 0 V, V_{GS} = 20 V			100	nA
$V_{GS(th)}$	Gate-to-Source Threshold Voltage	V_{DS} = V_{GS}, I_D = 250 µA	1.4	1.8	2.2	V
$R_{DS(on)}$	Drain-to-Source On Resistance	V_{GS} = 4.5 V, I_D = 32 A		1.3	1.7	mΩ
		V_{GS} = 10 V, I_D = 32 A		1	1.2	mΩ
g_{fs}	Transconductance	V_{DS} = 4 V, I_D = 32 A		180		S
DYNAMIC CHARACTERISTICS						
C_{iss}	Input Capacitance	V_{GS} = 0 V, V_{DS} = 20 V, f = 1 MHz		10700	13900	pF
C_{oss}	Output Capacitance			821	1070	pF
C_{rss}	Reverse Transfer Capacitance			272	354	pF
R_G	Series Gate Resistance			0.8	1.6	Ω
Q_g	Gate Charge Total (4.5 V)	V_{DS} = 20 V, I_D = 32 A		70	91	nC
Q_g	Gate Charge Total (10 V)			150	195	nC
Q_{gd}	Gate Charge Gate-to-Drain			17		nC
Q_{gs}	Gate Charge Gate-to-Source			29		nC
$Q_{g(th)}$	Gate Charge at V_{th}			18		nC
Q_{oss}	Output Charge	V_{DS} = 20 V, V_{GS} = 0 V		39		nC
$t_{d(on)}$	Turn On Delay Time	V_{DS} = 20 V, V_{GS} = 10 V, I_{DS} = 32 A, R_G = 0 Ω		9		ns
t_r	Rise Time			19		ns
$t_{d(off)}$	Turn Off Delay Time			57		ns
t_f	Fall Time			11		ns
DIODE CHARACTERISTICS						
V_{SD}	Diode Forward Voltage	I_{SD} = 32 A, V_{GS} = 0 V		0.8	1	V
Q_{rr}	Reverse Recovery Charge	V_{DS}= 20 V, I_F = 32 A, di/dt = 300 A/µs		40		nC
t_{rr}	Reverse Recovery Time			23		ns

5.2 Thermal Information

(T_A = 25°C unless otherwise stated)

THERMAL METRIC		MIN	TYP	MAX	UNIT
$R_{\theta JC}$	Junction-to-Case Thermal Resistance (1)			0.8	°C/W
$R_{\theta JA}$	Junction-to-Ambient Thermal Resistance (1) (2)			50	

(1) $R_{\theta JC}$ is determined with the device mounted on a 1-inch^2 (6.45-cm^2), 2-oz. (0.071-mm thick) Cu pad on a 1.5-inches × 1.5-inches (3.81-cm × 3.81-cm), 0.06-inch (1.52-mm) thick FR4 PCB. $R_{\theta JC}$ is specified by design, whereas $R_{\theta JA}$ is determined by the user's board design.
(2) Device mounted on FR4 material with 1-inch^2 (6.45-cm^2), 2-oz. (0.071-mm thick) Cu.

Copyright © 2014–2017, Texas Instruments Incorporated

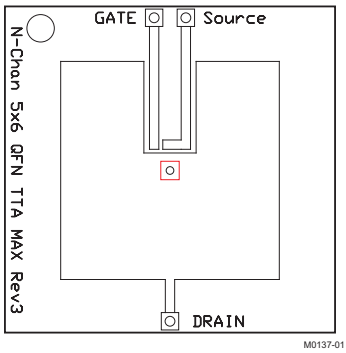

Max $R_{\theta JA}$ = 50°C/W when mounted on 1 inch^2 (6.45 cm^2) of 2-oz. (0.071-mm thick) Cu.

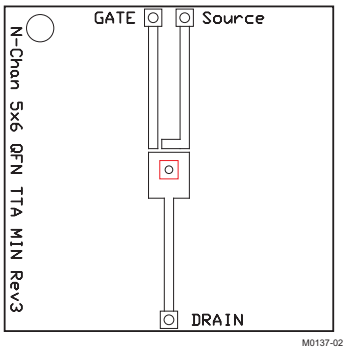

Max $R_{\theta JA}$ = 125°C/W when mounted on a minimum pad area of 2-oz. (0.071-mm thick) Cu.

5.3 Typical MOSFET Characteristics

(T_A = 25°C unless otherwise stated)

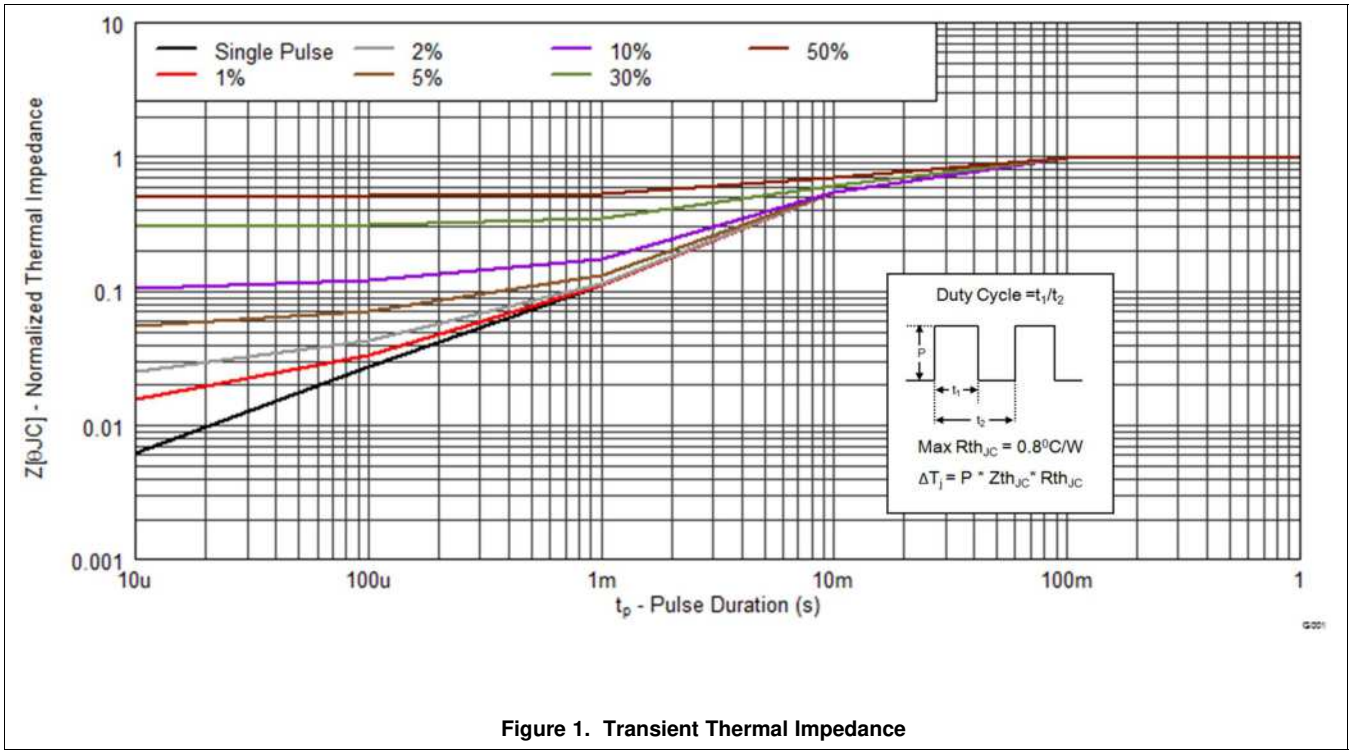

Figure 1. Transient Thermal Impedance

Copyright © 2014–2017, Texas Instruments Incorporated

Typical MOSFET Characteristics (continued)

(T_A = 25°C unless otherwise stated)

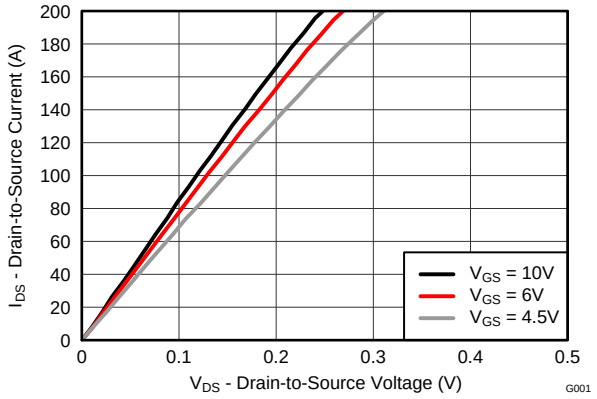

Figure 2. Saturation Characteristics

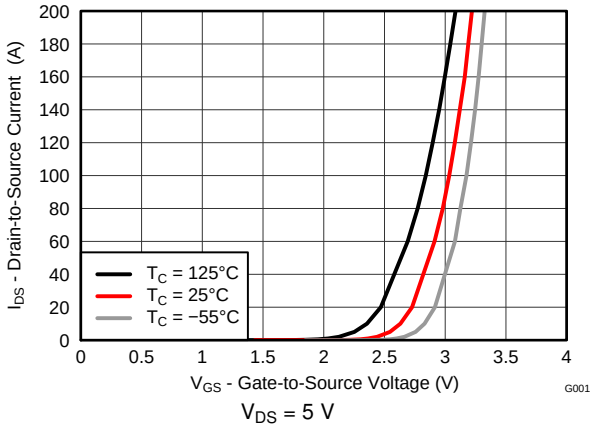

Figure 3. Transfer Characteristics

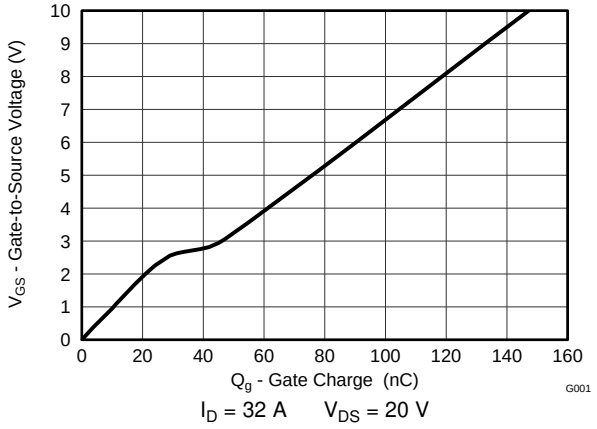

Figure 4. Gate Charge

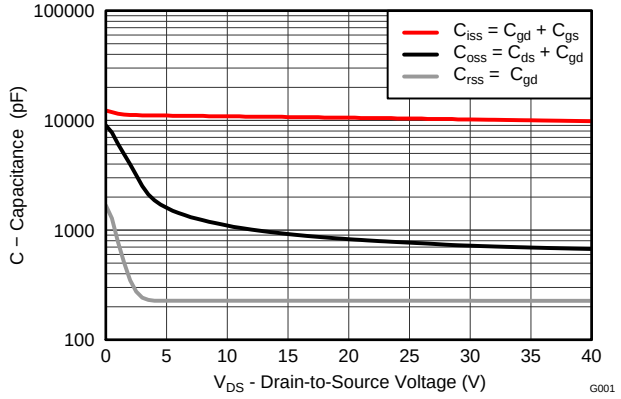

Figure 5. Capacitance

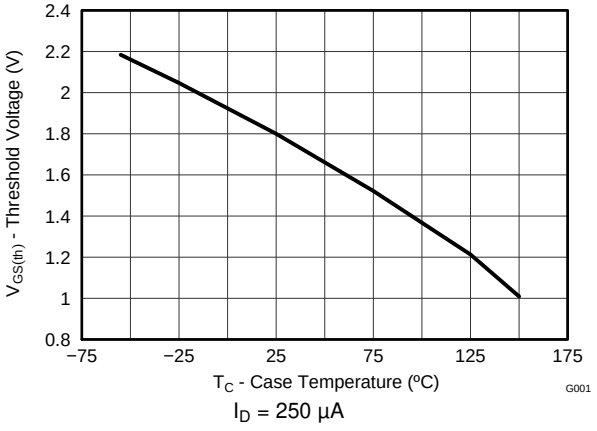

Figure 6. Threshold Voltage vs Temperature

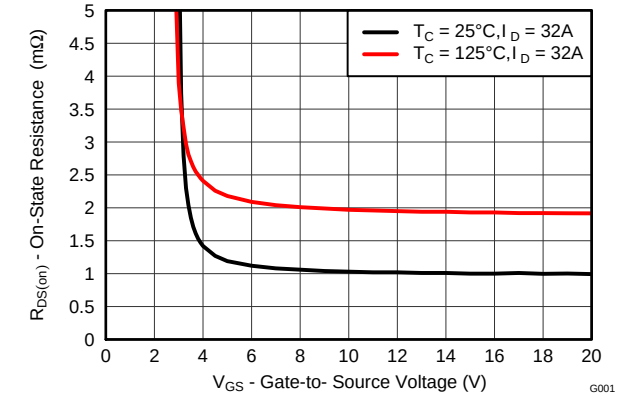

Figure 7. On-State Resistance vs Gate-to-Source Voltage

Copyright © 2014–2017, Texas Instruments Incorporated

Typical MOSFET Characteristics (continued)

(T_A = 25°C unless otherwise stated)

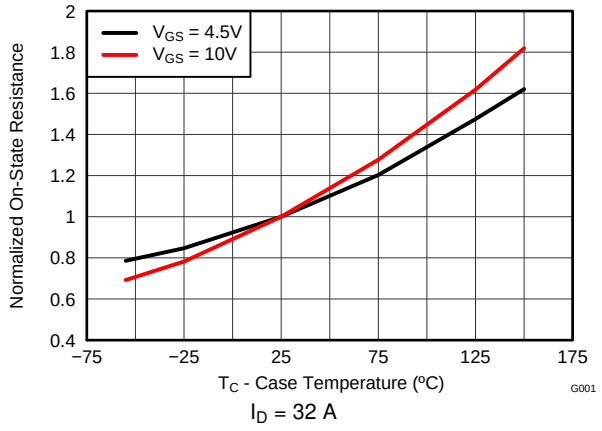

Figure 8. Normalized On-State Resistance vs Temperature

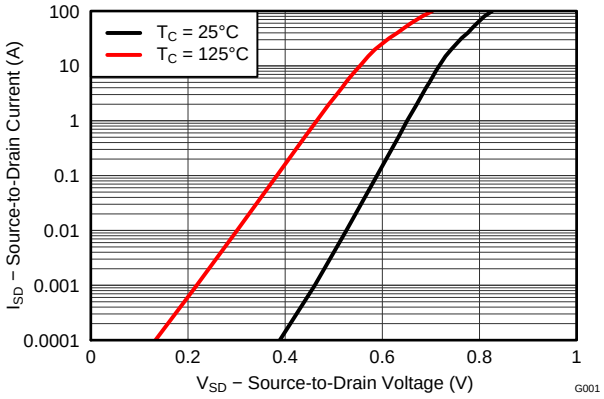

Figure 9. Typical Diode Forward Voltage

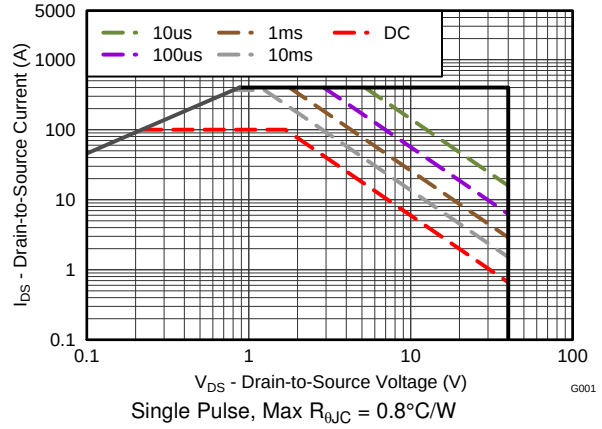

Figure 10. Maximum Safe Operating Area

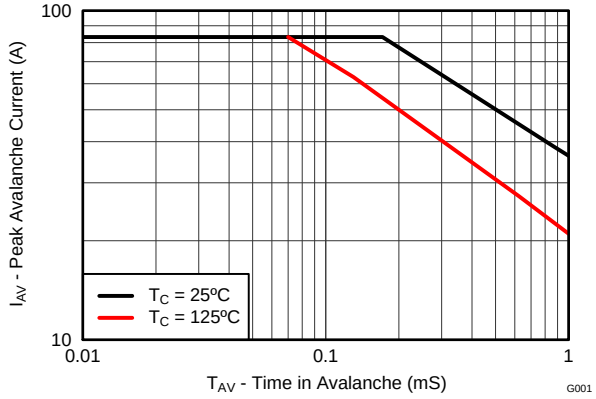

Figure 11. Single Pulse Unclamped Inductive Switching

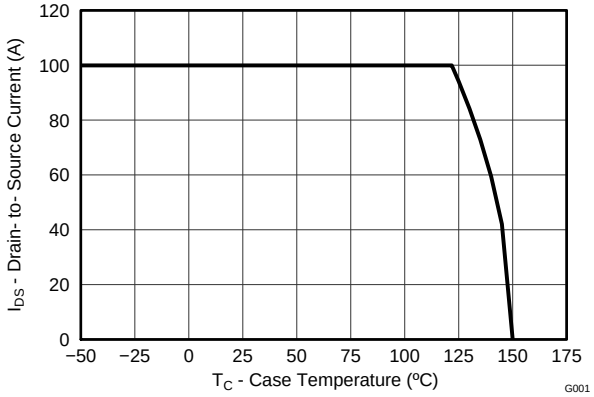

Figure 12. Maximum Drain Current vs Temperature

Copyright © 2014–2017, Texas Instruments Incorporated

6 Device and Documentation Support

6.1 Receiving Notification of Documentation Updates

To receive notification of documentation updates, navigate to the device product folder on ti.com. In the upper right corner, click on *Alert me* to register and receive a weekly digest of any product information that has changed. For change details, review the revision history included in any revised document.

6.2 Community Resources

The following links connect to TI community resources. Linked contents are provided "AS IS" by the respective contributors. They do not constitute TI specifications and do not necessarily reflect TI's views; see TI's Terms of Use.

TI E2E™ Online Community ***TI's Engineer-to-Engineer (E2E) Community.*** Created to foster collaboration among engineers. At e2e.ti.com, you can ask questions, share knowledge, explore ideas and help solve problems with fellow engineers.

Design Support ***TI's Design Support*** Quickly find helpful E2E forums along with design support tools and contact information for technical support.

6.3 Trademarks

NexFET, E2E are trademarks of Texas Instruments.

6.4 Electrostatic Discharge Caution



These devices have limited built-in ESD protection. The leads should be shorted together or the device placed in conductive foam during storage or handling to prevent electrostatic damage to the MOS gates.

6.5 Glossary

SLYZ022 — *TI Glossary*.

This glossary lists and explains terms, acronyms, and definitions.

Copyright © 2014–2017, Texas Instruments Incorporated

7 Mechanical, Packaging, and Orderable Information

The following pages include mechanical packaging and orderable information. This information is the most current data available for the designated devices. This data is subject to change without notice and revision of this document. For browser-based versions of this data sheet, refer to the left-hand navigation.

7.1 Q5B Package Dimensions

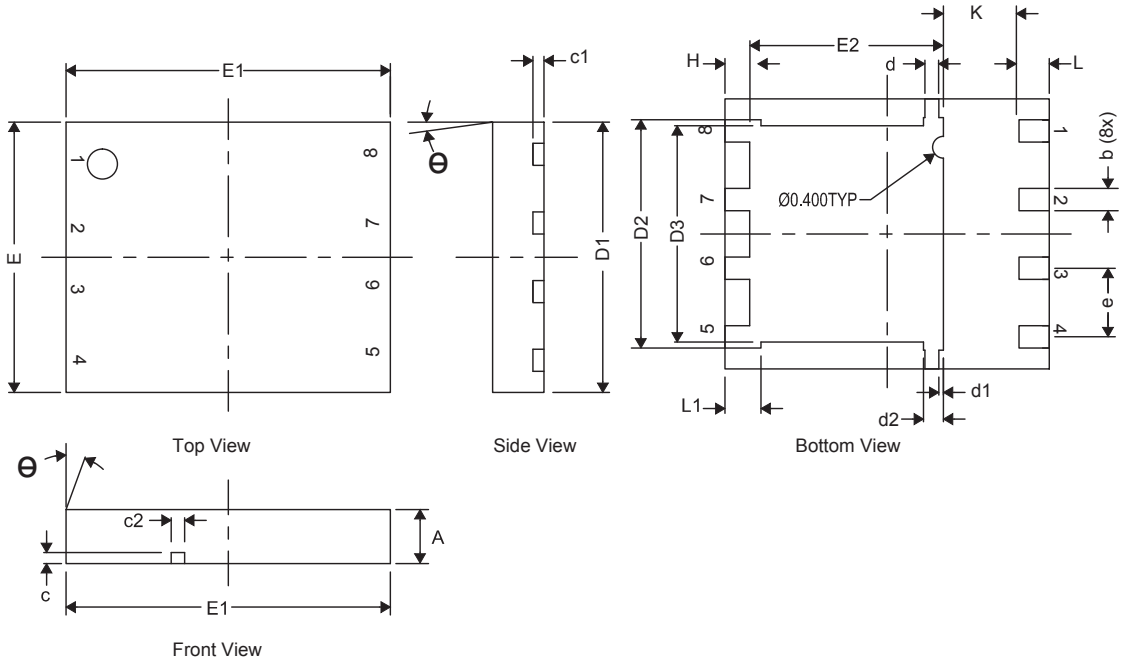

DIM	MILLIMETERS		
	MIN	NOM	MAX
A	0.80	1.00	1.05
b	0.36	0.41	0.46
c	0.15	0.20	0.25
c1	0.15	0.20	0.25
c2	0.20	0.25	0.30
D1	4.90	5.00	5.10
D2	4.12	4.22	4.32
D3	3.90	4.00	4.10
d	0.20	0.25	0.30
d1	0.085 TYP		
d2	0.319	0.369	0.419
E	4.90	5.00	5.10
E1	5.90	6.00	6.10
E2	3.48	3.58	3.68
e	1.27 TYP		
H	0.36	0.46	0.56
L	0.46	0.56	0.66
L1	0.57	0.67	0.77
θ	0°	—	—
K	1.40 TYP		

Copyright © 2014–2017, Texas Instruments Incorporated

7.2 Recommended PCB Pattern

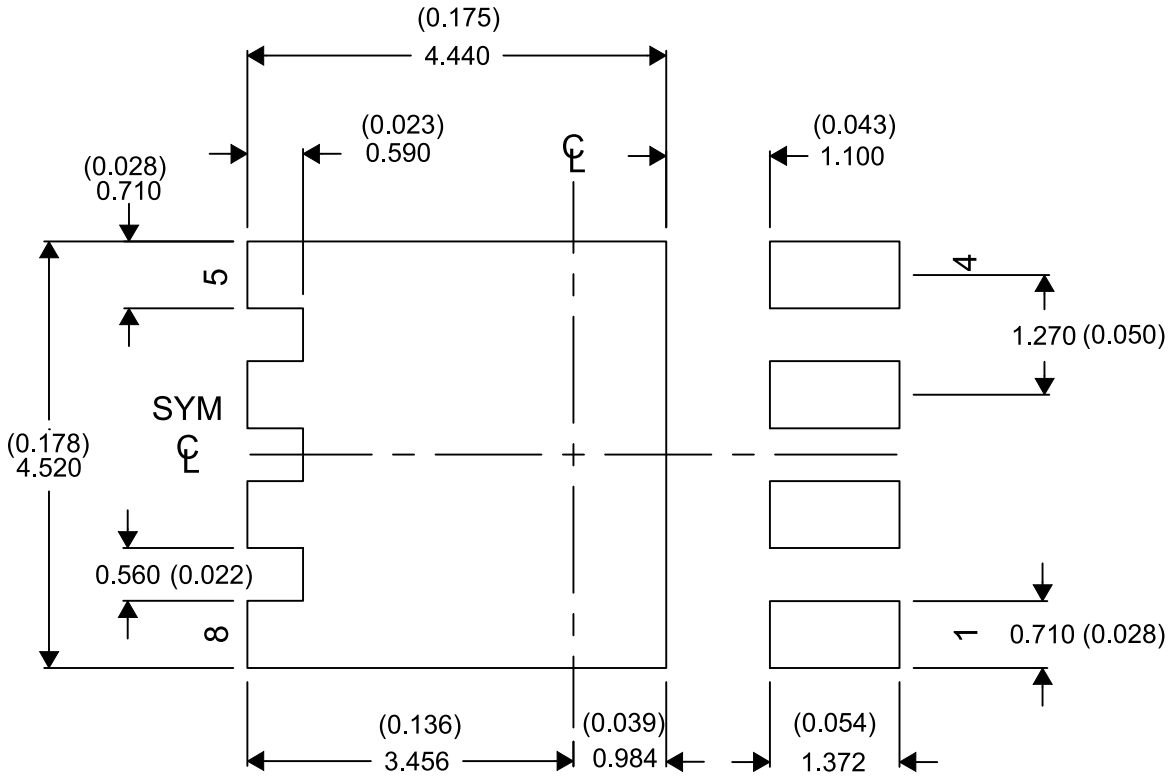

For recommended circuit layout for PCB designs, see application note SLPA005 – *Reducing Ringing Through PCB Layout Techniques*.

7.3 Recommended Stencil Pattern

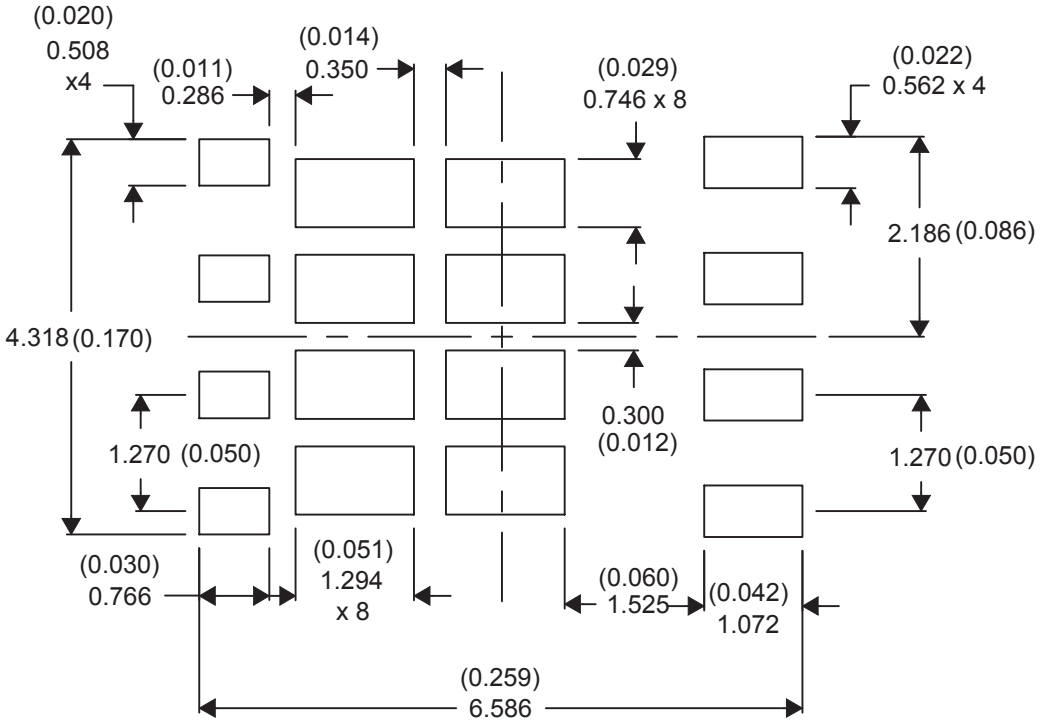

7.4 Q5B Tape and Reel Information

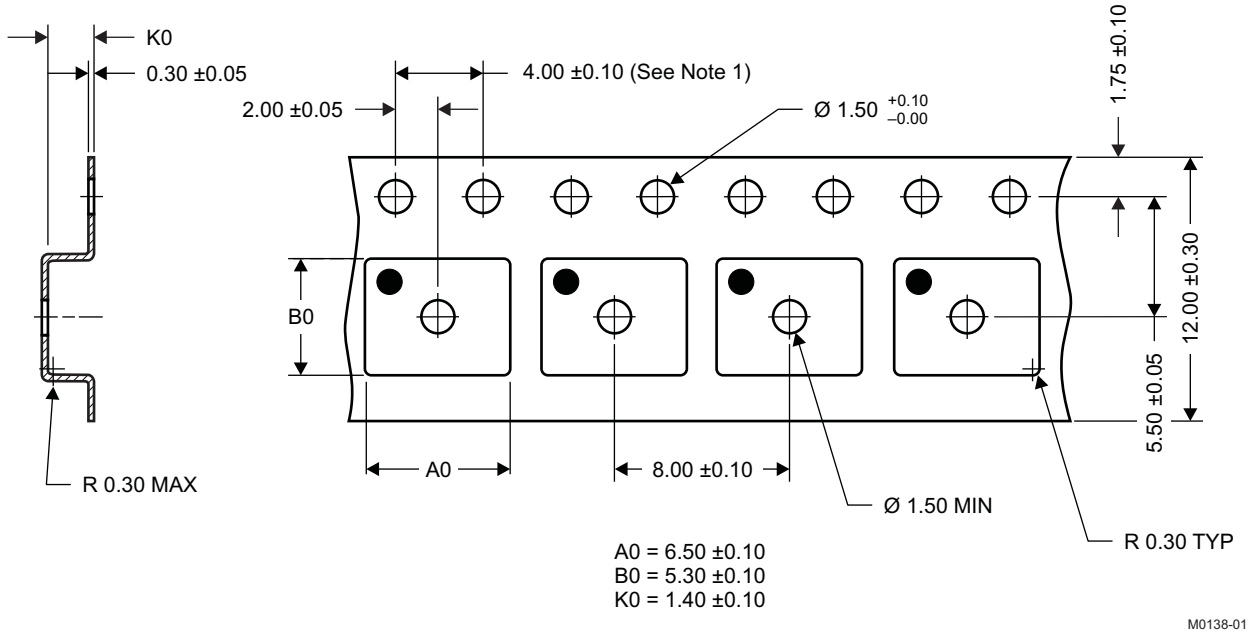

Notes:

1. 10-sprocket hole-pitch cumulative tolerance ±0.2
2. Camber not to exceed 1 mm in 100 mm, noncumulative over 250 mm
3. Material: black static-dissipative polystyrene
4. All dimensions are in mm (unless otherwise specified).
5. A0 and B0 measured on a plane 0.3 mm above the bottom of the pocket

Copyright © 2014–2017, Texas Instruments Incorporated

PACKAGING INFORMATION

Orderable part number	Status (1)	Material type (2)	Package | Pins	Package qty | Carrier	RoHS (3)	Lead finish/ Ball material (4)	MSL rating/ Peak reflow (5)	Op temp (°C)	Part marking (6)
CSD18509Q5B	Active	Production	VSON-CLIP (DNK) | 8	2500 | LARGE T&R	ROHS Exempt	NIPDAU | SN	Level-1-260C-UNLIM	-55 to 150	CSD18509
CSD18509Q5B.B	Active	Production	VSON-CLIP (DNK) | 8	2500 | LARGE T&R	ROHS Exempt	NIPDAU	Level-1-260C-UNLIM	-55 to 150	CSD18509
CSD18509Q5BG4	Active	Production	VSON-CLIP (DNK) | 8	2500 | LARGE T&R	ROHS Exempt	NIPDAU	Level-1-260C-UNLIM	-55 to 150	CSD18509
CSD18509Q5BG4.B	Active	Production	VSON-CLIP (DNK) | 8	2500 | LARGE T&R	ROHS Exempt	NIPDAU	Level-1-260C-UNLIM	-55 to 150	CSD18509
CSD18509Q5BT	Active	Production	VSON-CLIP (DNK) | 8	250 | SMALL T&R	ROHS Exempt	NIPDAU | SN	Level-1-260C-UNLIM	-55 to 150	CSD18509
CSD18509Q5BT.B	Active	Production	VSON-CLIP (DNK) | 8	250 | SMALL T&R	ROHS Exempt	NIPDAU	Level-1-260C-UNLIM	-55 to 150	CSD18509

(1) **Status:** For more details on status, see our product life cycle.

(2) **Material type:** When designated, preproduction parts are prototypes/experimental devices, and are not yet approved or released for full production. Testing and final process, including without limitation quality assurance, reliability performance testing, and/or process qualification, may not yet be complete, and this item is subject to further changes or possible discontinuation. If available for ordering, purchases will be subject to an additional waiver at checkout, and are intended for early internal evaluation purposes only. These items are sold without warranties of any kind.

(3) **RoHS values:** Yes, No, RoHS Exempt. See the TI RoHS Statement for additional information and value definition.

(4) **Lead finish/Ball material:** Parts may have multiple material finish options. Finish options are separated by a vertical ruled line. Lead finish/Ball material values may wrap to two lines if the finish value exceeds the maximum column width.

(5) **MSL rating/Peak reflow:** The moisture sensitivity level ratings and peak solder (reflow) temperatures. In the event that a part has multiple moisture sensitivity ratings, only the lowest level per JEDEC standards is shown. Refer to the shipping label for the actual reflow temperature that will be used to mount the part to the printed circuit board.

(6) **Part marking:** There may be an additional marking, which relates to the logo, the lot trace code information, or the environmental category of the part.

Multiple part markings will be inside parentheses. Only one part marking contained in parentheses and separated by a "~" will appear on a part. If a line is indented then it is a continuation of the previous line and the two combined represent the entire part marking for that device.

Important Information and Disclaimer: The information provided on this page represents TI's knowledge and belief as of the date that it is provided. TI bases its knowledge and belief on information provided by third parties, and makes no representation or warranty as to the accuracy of such information. Efforts are underway to better integrate information from third parties. TI has taken and continues to take reasonable steps to provide representative and accurate information but may not have conducted destructive testing or chemical analysis on incoming materials and chemicals. TI and TI suppliers consider certain information to be proprietary, and thus CAS numbers and other limited information may not be available for release.

In no event shall TI's liability arising out of such information exceed the total purchase price of the TI part(s) at issue in this document sold by TI to Customer on an annual basis.

IMPORTANT NOTICE AND DISCLAIMER

TI PROVIDES TECHNICAL AND RELIABILITY DATA (INCLUDING DATASHEETS), DESIGN RESOURCES (INCLUDING REFERENCE DESIGNS), APPLICATION OR OTHER DESIGN ADVICE, WEB TOOLS, SAFETY INFORMATION, AND OTHER RESOURCES “AS IS” AND WITH ALL FAULTS, AND DISCLAIMS ALL WARRANTIES, EXPRESS AND IMPLIED, INCLUDING WITHOUT LIMITATION ANY IMPLIED WARRANTIES OF MERCHANTABILITY, FITNESS FOR A PARTICULAR PURPOSE OR NON-INFRINGEMENT OF THIRD PARTY INTELLECTUAL PROPERTY RIGHTS.

These resources are intended for skilled developers designing with TI products. You are solely responsible for (1) selecting the appropriate TI products for your application, (2) designing, validating and testing your application, and (3) ensuring your application meets applicable standards, and any other safety, security, regulatory or other requirements.

These resources are subject to change without notice. TI grants you permission to use these resources only for development of an application that uses the TI products described in the resource. Other reproduction and display of these resources is prohibited. No license is granted to any other TI intellectual property right or to any third party intellectual property right. TI disclaims responsibility for, and you fully indemnify TI and its representatives against any claims, damages, costs, losses, and liabilities arising out of your use of these resources.

TI’s products are provided subject to TI’s Terms of Sale, TI’s General Quality Guidelines, or other applicable terms available either on ti.com or provided in conjunction with such TI products. TI’s provision of these resources does not expand or otherwise alter TI’s applicable warranties or warranty disclaimers for TI products. Unless TI explicitly designates a product as custom or customer-specified, TI products are standard, catalog, general purpose devices.

TI objects to and rejects any additional or different terms you may propose.

Copyright © 2025, Texas Instruments Incorporated

Last updated 10/2025