CSD87335Q3D Synchronous Buck NexFET™ Power Block

1 Features

- Half-Bridge Power Block
- Up to 27-V V_{IN}
- 93.5% System Efficiency at 15 A
- Up to 25-A Operation
- High-Frequency Operation (Up to 1.5 MHz)
- High-Density SON 3.3-mm × 3.3-mm Footprint
- Optimized for 5-V Gate Drive
- Low-Switching Losses
- Ultra-Low Inductance Package
- RoHS Compliant
- Halogen Free
- Lead-Free Terminal Plating

2 Applications

- Synchronous Buck Converters
  - High-Frequency Applications
  - High-Current, Low-Duty Cycle Applications
- Multiphase Synchronous Buck Converters
- POL DC-DC Converters
- IMVP, VRM, and VRD Applications

3 Description

The CSD87335Q3D NexFET™ power block is an optimized design for synchronous buck applications offering high-current, high-efficiency, and high-frequency capability in a small 3.3-mm × 3.3-mm outline. Optimized for 5-V gate drive applications, this product offers a flexible solution capable of offering a high-density power supply when paired with any 5-V gate drive from an external controller or driver.

Top View

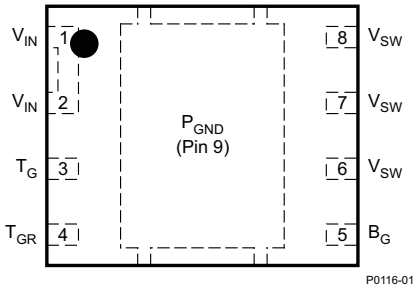

Device Information(1)

DEVICE	MEDIA	QTY	PACKAGE	SHIP
CSD87335Q3D	13-Inch Reel	2500	SON 3.30-mm × 3.30-mm Plastic Package	Tape and Reel
CSD87335Q3DT	7-Inch Reel	250		

(1) For all available packages, see the orderable addendum at the end of the data sheet.

Typical Circuit

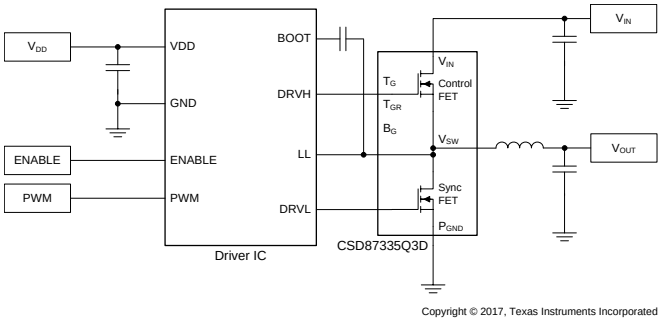

Copyright © 2017, Texas Instruments Incorporated

Typical Power Block Efficiency and Power Loss

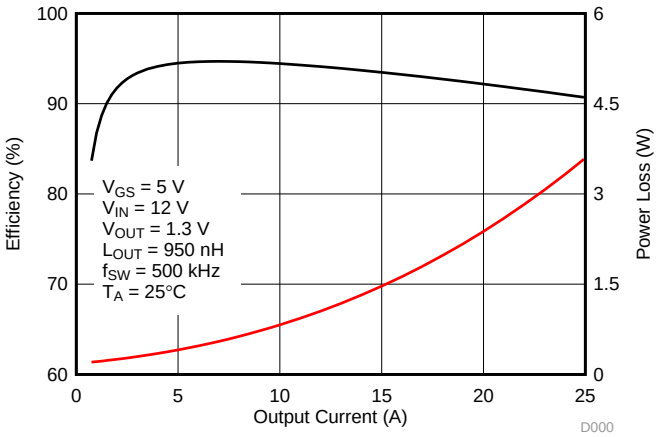

An IMPORTANT NOTICE at the end of this data sheet addresses availability, warranty, changes, use in safety-critical applications, intellectual property matters and other important disclaimers. PRODUCTION DATA.

Table of Contents

1 Features ... 1
2 Applications ... 1
3 Description ... 1
4 Revision History ... 2
5 Specifications ... 3
5.1 Absolute Maximum Ratings ... 3
5.2 Recommended Operating Conditions ... 3
5.3 Thermal Information ... 3
5.4 Power Block Performance ... 3
5.5 Electrical Characteristics ... 4
5.6 Typical Power Block Device Characteristics ... 5
5.7 Typical Power Block MOSFET Characteristics ... 7
6 Applications and Implementation ... 10
6.1 Application Information ... 10
6.2 Power Loss Curves ... 12
6.3 Safe Operating Curves (SOA) ... 12
6.4 Normalized Curves ... 12
6.5 Calculating Power Loss and SOA ... 13
7 Recommended PCB Design Overview ... 15
7.1 Electrical Performance ... 15
7.2 Thermal Performance ... 16
8 Device and Documentation Support ... 17
8.1 Receiving Notification of Documentation Updates ... 17
8.2 Community Resources ... 17
8.3 Trademarks ... 17
8.4 Electrostatic Discharge Caution ... 17
8.5 Glossary ... 17
9 Mechanical, Packaging, and Orderable Information ... 18
9.1 Q3D Package Dimensions ... 18
9.2 Land Pattern Recommendation ... 19
9.3 Stencil Recommendation ... 19
9.4 Q3D Tape and Reel Information ... 20
9.5 Pin Configuration ... 20

4 Revision History

Changes from Revision A (October 2017) to Revision B — **Page**

- Updated Figure 33 top layer showing pins 1 and 2 connected. ... 16

Changes from Original (February 2016) to Revision A — **Page**

- Corrected X & Y axis labels on Figure 29 ... 11
- Corrected X & Y axis labels on Figure 30 ... 11

Copyright © 2016–2018, Texas Instruments Incorporated

5 Specifications

5.1 Absolute Maximum Ratings

T_A = 25°C (unless otherwise noted)(1)

		MIN	MAX	UNIT
Voltage	V_{IN} to P_{GND}		30	V
	V_{SW} to P_{GND}		30	
	V_{SW} to P_{GND} (10 ns)		32	
	T_G to T_{GR}	–8	10	
	B_G to P_{GND}	–8	10	
Pulsed current rating, I_{DM}(2)			70	A
Power dissipation, P_D			6	W
Avalanche energy, E_{AS}	Sync FET, I_D = 51 A, L = 0.1 mH		130	mJ
	Control FET, I_D = 33 A, L = 0.1 mH		54	
Operating junction and storage temperature, T_J, T_{STG}		–55	150	°C

(1) Stresses beyond those listed under *Absolute Maximum Ratings* may cause permanent damage to the device. These are stress ratings only, and functional operation of the device at these or any other conditions beyond those indicated in the *Recommended Operating Conditions* is not implied. Exposure to absolute-maximum-rated conditions for extended periods may affect device reliability.
(2) Pulse duration ≤ 50 µs, duty cycle ≤ 1%.

5.2 Recommended Operating Conditions

T_A = 25°C (unless otherwise noted)

			MIN	MAX	UNIT
V_{GS}	Gate drive voltage		4.5	8	V
V_{IN}	Input supply voltage			27	V
f_{SW}	Switching frequency	C_{BST} = 0.1 µF (min)		1500	kHz
	Operating current			25	A
T_J	Operating temperature			125	°C

5.3 Thermal Information

T_A = 25°C (unless otherwise stated)

THERMAL METRIC		MIN	TYP	MAX	UNIT
$R_{\theta JA}$	Junction-to-ambient thermal resistance (min Cu)(1)			135	°C/W
	Junction-to-ambient thermal resistance (max Cu)(1)(2)			73	
$R_{\theta JC}$	Junction-to-case thermal resistance (top of package)(1)			29	°C/W
	Junction-to-case thermal resistance (P_{GND} pin)(1)			2.5	

(1) $R_{\theta JC}$ is determined with the device mounted on a 1-in^2 (6.45-cm^2), 2-oz (0.071-mm) thick Cu pad on a 1.5-in × 1.5-in (3.81-cm × 3.81-cm), 0.06-in (1.52-mm) thick FR4 board. $R_{\theta JC}$ is specified by design while $R_{\theta JA}$ is determined by the user's board design.
(2) Device mounted on FR4 material with 1-in^2 (6.45-cm^2) Cu.

5.4 Power Block Performance(1)

T_A = 25°C (unless otherwise noted)

PARAMETER		TEST CONDITIONS	MIN	TYP	MAX	UNIT
P_{LOSS}	Power loss(1)	V_{IN} = 12 V, V_{GS} = 5 V, V_{OUT} = 1.3 V, I_{OUT} = 15 A, f_{SW} = 500 kHz, L_{OUT} = 950 nH, T_J = 25°C		1.5		W
I_{QVIN}	V_{IN} quiescent current	T_G to T_{GR} = 0 V, B_G to P_{GND} = 0 V		10		µA

(1) Measurement made with six 10-µF (TDK C3216X5R1C106KT or equivalent) ceramic capacitors placed across V_{IN} to P_{GND} pins and using a high-current 5-V driver IC.

Copyright © 2016–2018, Texas Instruments Incorporated

5.5 Electrical Characteristics

T_A = 25°C (unless otherwise stated)

PARAMETER		TEST CONDITIONS	Q1 Control FET			Q2 Sync FET			UNIT
			MIN	TYP	MAX	MIN	TYP	MAX	
STATIC CHARACTERISTICS									
BV_{DSS}	Drain-to-source voltage	V_{GS} = 0 V, I_{DS} = 250 µA	30			30			V
I_{DSS}	Drain-to-source leakage current	V_{GS} = 0 V, V_{DS} = 24 V			1			1	µA
I_{GSS}	Gate-to-source leakage current	V_{DS} = 0 V, V_{GS} = +10 V / –8 V			100			100	nA
$V_{GS(th)}$	Gate-to-source threshold voltage	V_{DS} = V_{GS}, I_{DS} = 250 µA	1.0		1.9	0.75		1.20	V
$Z_{DS(on)}$	Effective AC on-impedance	V_{IN} = 12 V, V_{GS} = 5 V, V_{OUT} = 1.3 V, I_{OUT} = 15 A, f_{SW} = 500 kHz, L_{OUT} = 950 nH		6.7			1.9		mΩ
g_{fs}	Transconductance	V_{DS} = 3 V, I_{DS} = 15 A		59			107		S
DYNAMIC CHARACTERISTICS									
C_{ISS}	Input capacitance	V_{GS} = 0 V, V_{DS} = 15 V, f = 1 MHz		805	1050		1620	2100	pF
C_{OSS}	Output capacitance			412	536		783	1020	pF
C_{RSS}	Reverse transfer capacitance			15	20		28	36	pF
R_G	Series gate resistance			1.2	2.4		0.6	1.2	Ω
Q_g	Gate charge total (4.5 V)	V_{DS} = 15 V, I_{DS} = 15 A		5.7	7.4		10.7	14.0	nC
Q_{gd}	Gate charge – gate-to-drain			1.1			1.7		nC
Q_{gs}	Gate charge – gate-to-source			2.1			2.8		nC
$Q_{g(th)}$	Gate charge at Vth			1.1			1.4		nC
Q_{OSS}	Output charge	V_{DS} = 15 V, V_{GS} = 0 V		11			19		nC
$t_{d(on)}$	Turnon delay time	V_{DS} = 15 V, V_{GS} = 4.5 V, I_{DS} = 15 A, R_G = 2 Ω		8			8		ns
t_r	Rise time			29			27		ns
$t_{d(off)}$	Turnoff delay time			13			17		ns
t_f	Fall time			4			5		ns
DIODE CHARACTERISTICS									
V_{SD}	Diode forward voltage	I_{DS} = 15 A, V_{GS} = 0 V		0.8	1.0		0.8	1.0	V
Q_{rr}	Reverse recovery charge	V_{DS} = 15 V, I_F = 15 A, di/dt = 300 A/µs		24			40		nC
t_{rr}	Reverse recovery time			17			22		ns

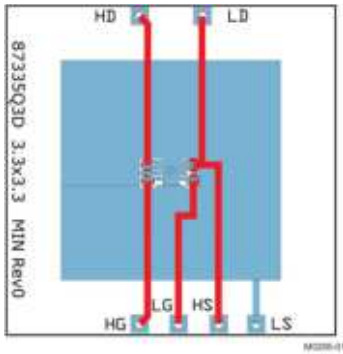

Max $R_{\theta JA}$ = 73°C/W when mounted on 1 in^2 (6.45 cm^2) of 2-oz (0.071-mm) thick Cu.

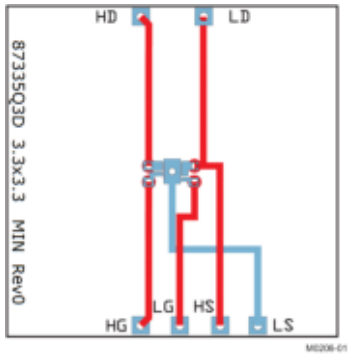

Max $R_{\theta JA}$ = 135°C/W when mounted on minimum pad area of 2-oz. (0.071-mm) thick Cu.

Copyright © 2016–2018, Texas Instruments Incorporated

5.6 Typical Power Block Device Characteristics

Test conditions: V_{IN} = 12 V, V_{DD} = 5 V, f_{SW} = 500 kHz, V_{OUT} = 1.3 V, L_{OUT} = 950 nH, I_{OUT} = 25 A, T_J = 125°C, unless stated otherwise.

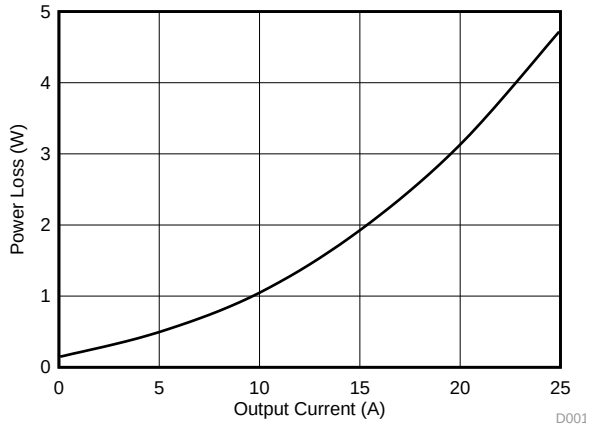

Figure 1. Power Loss vs Output Current

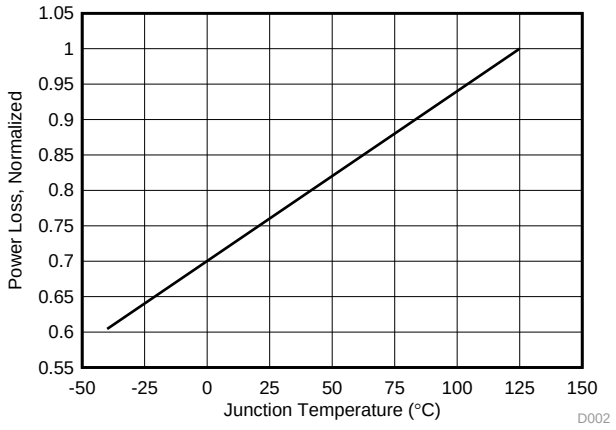

Figure 2. Power Loss vs Temperature

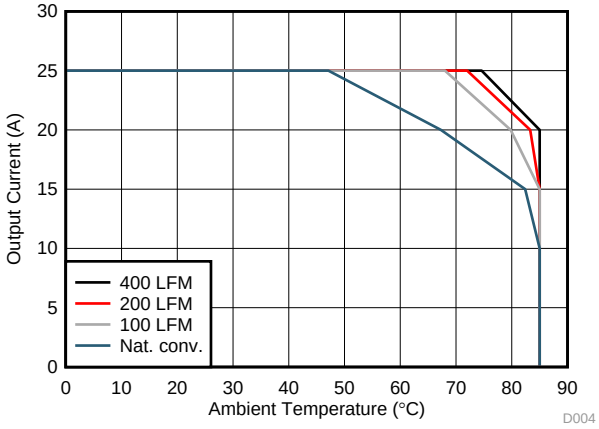

Figure 3. Safe Operating Area – PCB Horizontal Mount(1)

(1) The Typical Power Block System Characteristic curves are based on measurements made on a PCB design with dimensions of 4 in (W) × 3.5 in (L) × 0.062 in (H) and 6 copper layers of 1-oz copper thickness. See *Applications and Implementation* section for detailed explanation.

Copyright © 2016–2018, Texas Instruments Incorporated

Typical Power Block Device Characteristics (continued)

Test conditions: V_{IN} = 12 V, V_{DD} = 5 V, f_{SW} = 500 kHz, V_{OUT} = 1.3 V, L_{OUT} = 950 nH, I_{OUT} = 25 A, T_J = 125°C, unless stated otherwise.

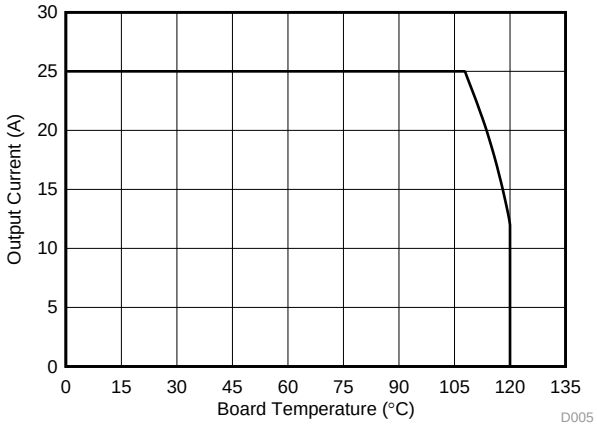

Figure 4. Typical Safe Operating Area(1)

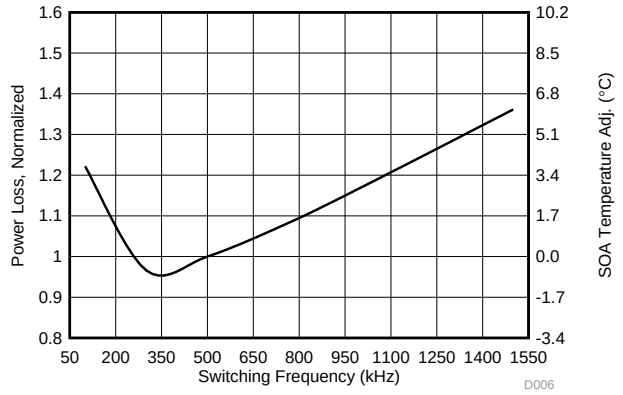

Figure 5. Normalized Power Loss vs Switching Frequency

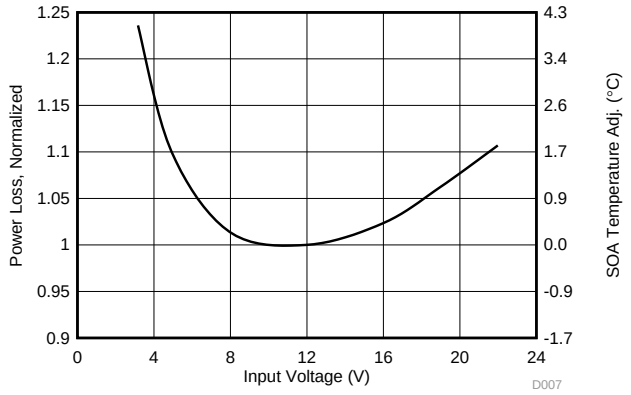

Figure 6. Normalized Power Loss vs Input Voltage

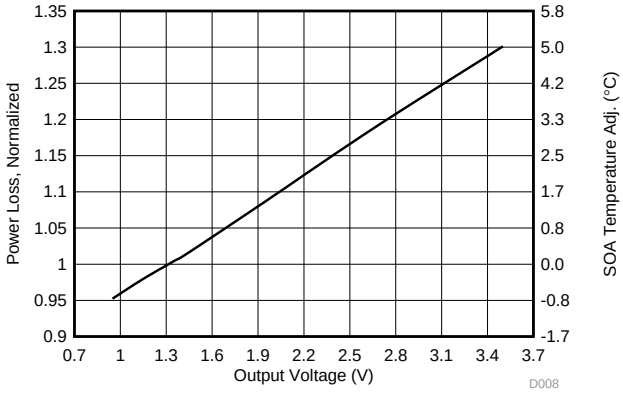

Figure 7. Normalized Power Loss vs Output Voltage

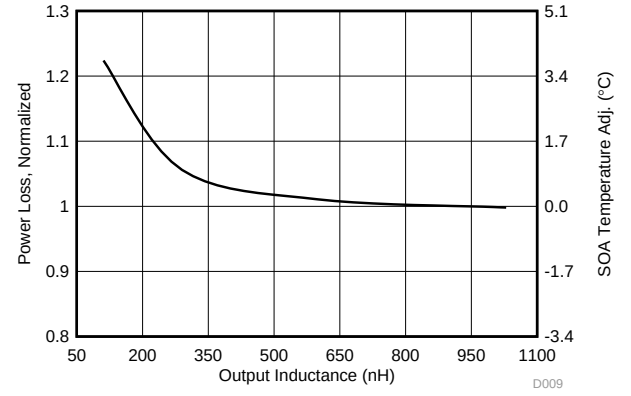

Figure 8. Normalized Power Loss vs Output Inductance

Copyright © 2016–2018, Texas Instruments Incorporated

5.7 Typical Power Block MOSFET Characteristics

T_A = 25°C, unless stated otherwise.

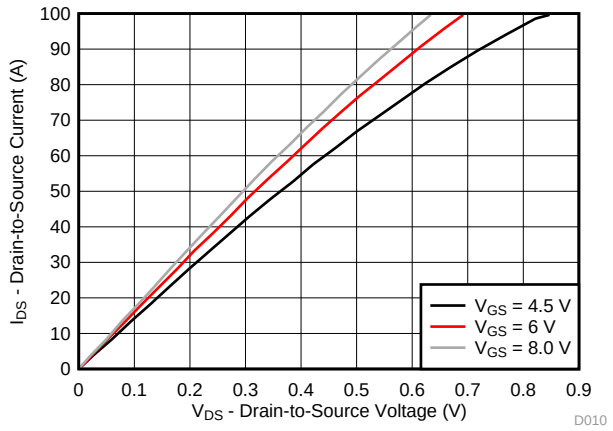

Figure 9. Control MOSFET Saturation

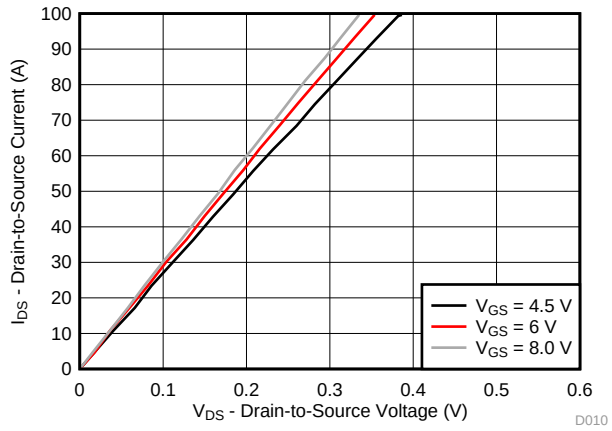

Figure 10. Sync MOSFET Saturation

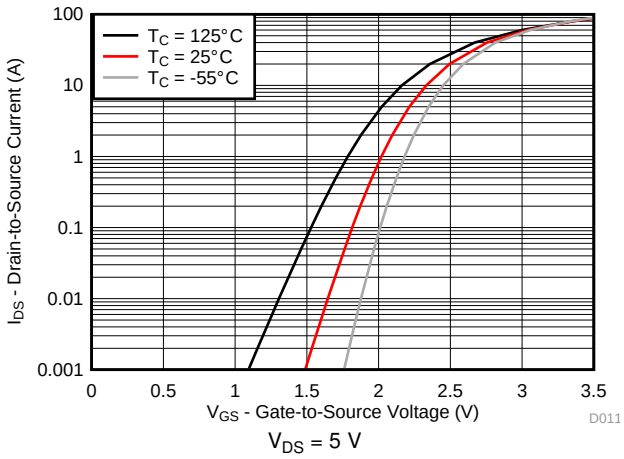

Figure 11. Control MOSFET Transfer

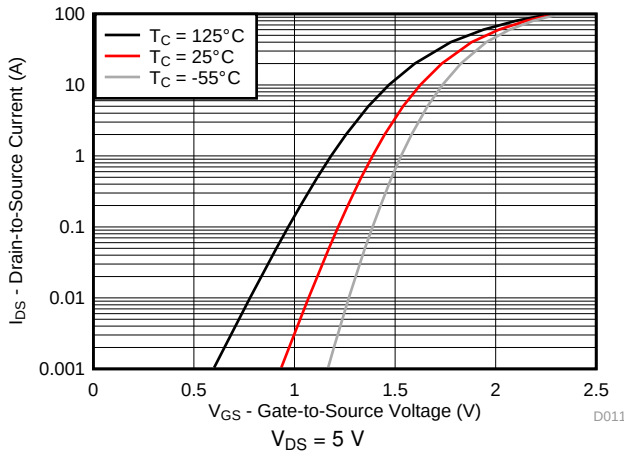

Figure 12. Sync MOSFET Transfer

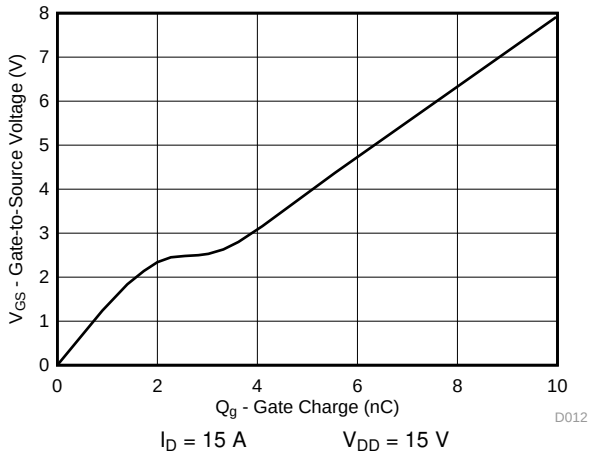

Figure 13. Control MOSFET Gate Charge

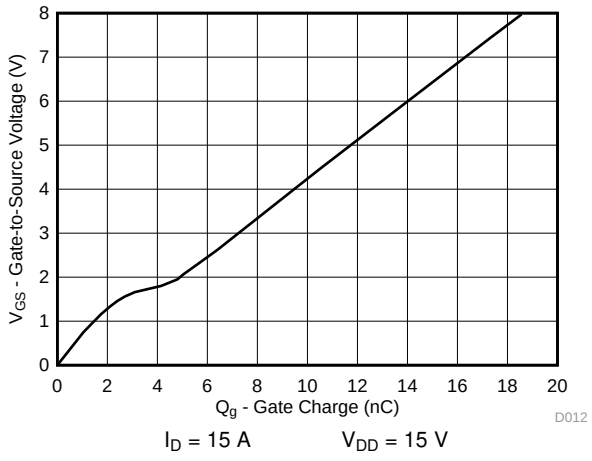

Figure 14. Sync MOSFET Gate Charge

Copyright © 2016–2018, Texas Instruments Incorporated

Typical Power Block MOSFET Characteristics (continued)

T_A = 25°C, unless stated otherwise.

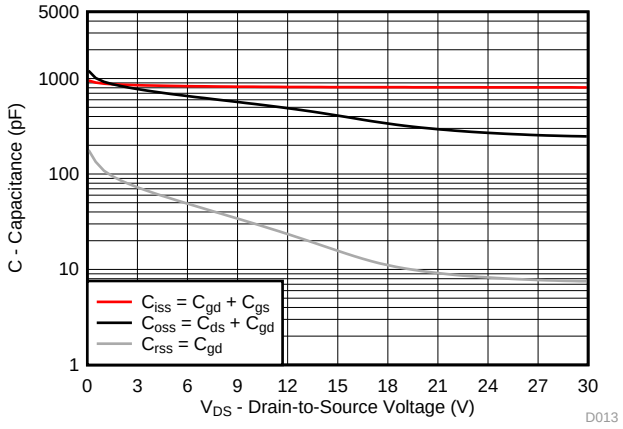

Figure 15. Control MOSFET Capacitance

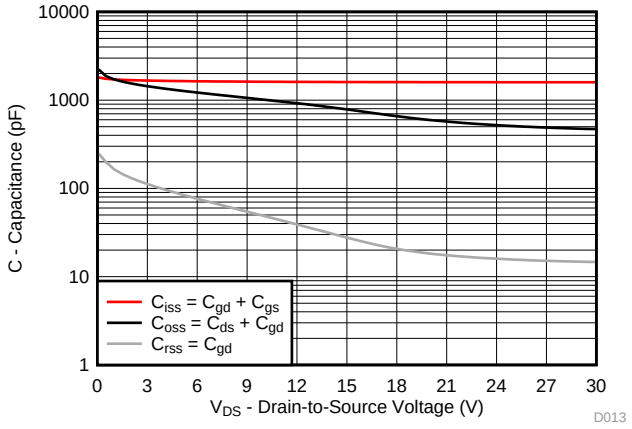

Figure 16. Sync MOSFET Capacitance

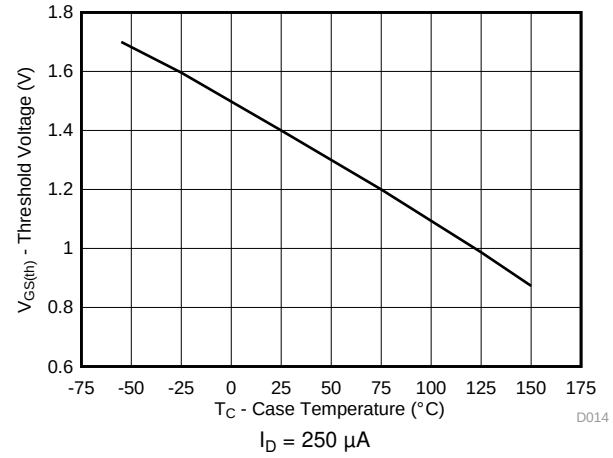

Figure 17. Control MOSFET $V_{GS(th)}$

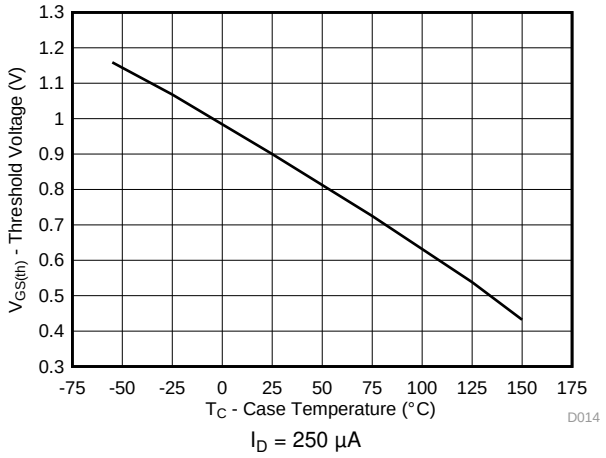

Figure 18. Sync MOSFET $V_{GS(th)}$

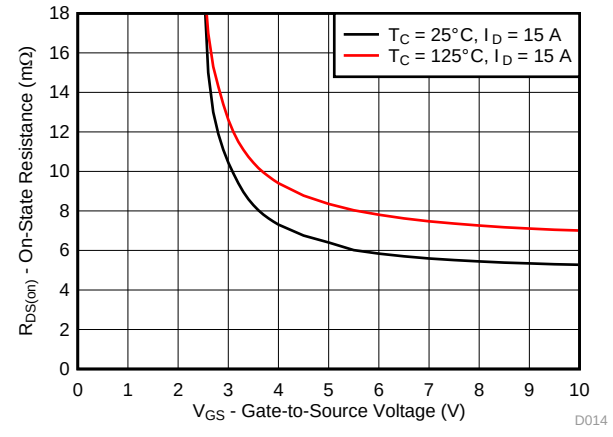

Figure 19. Control MOSFET $R_{DS(on)}$ vs V_{GS}

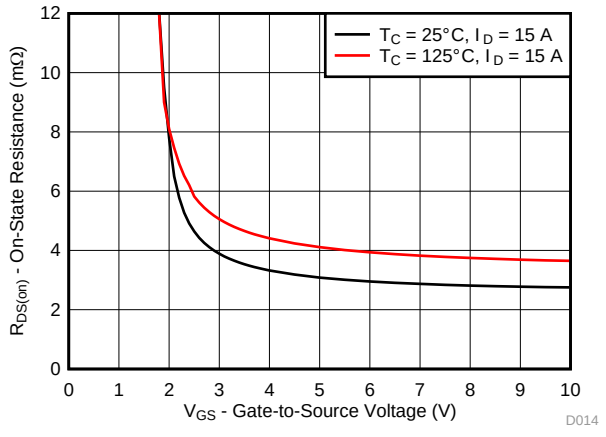

Figure 20. Sync MOSFET $R_{DS(on)}$ vs V_{GS}

Copyright © 2016–2018, Texas Instruments Incorporated

Typical Power Block MOSFET Characteristics (continued)

T_A = 25°C, unless stated otherwise.

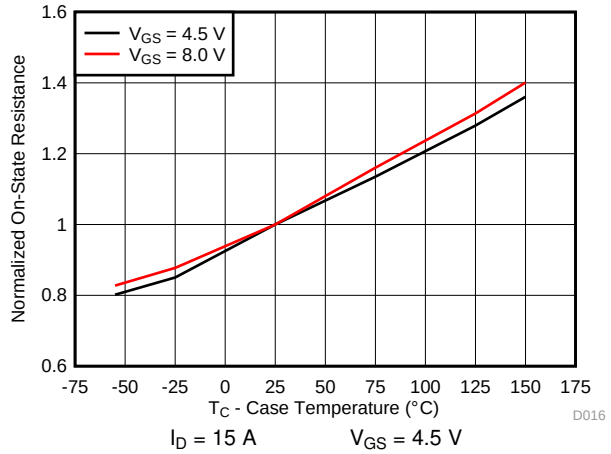

Figure 21. Control MOSFET Normalized $R_{DS(on)}$

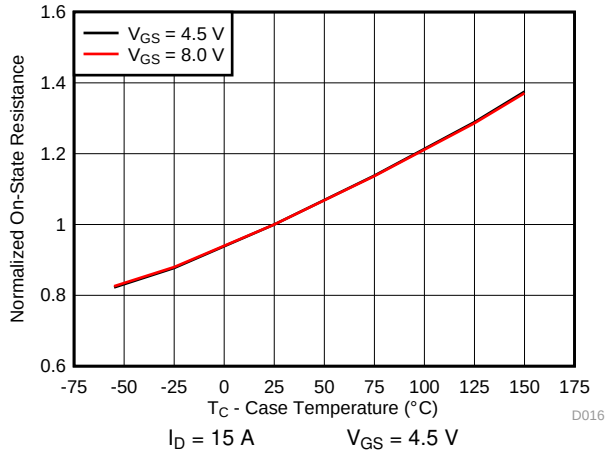

Figure 22. Sync MOSFET Normalized $R_{DS(on)}$

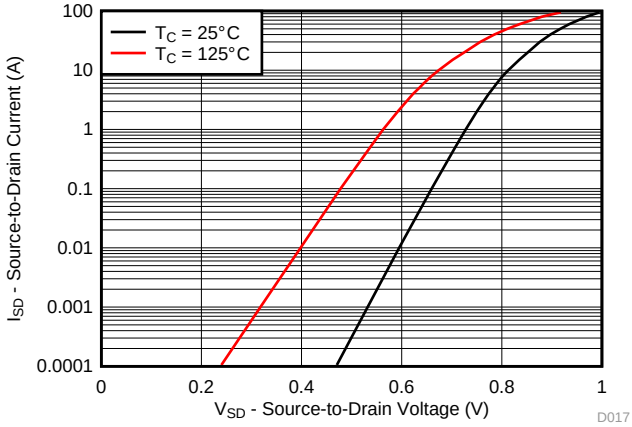

Figure 23. Control MOSFET Body Diode

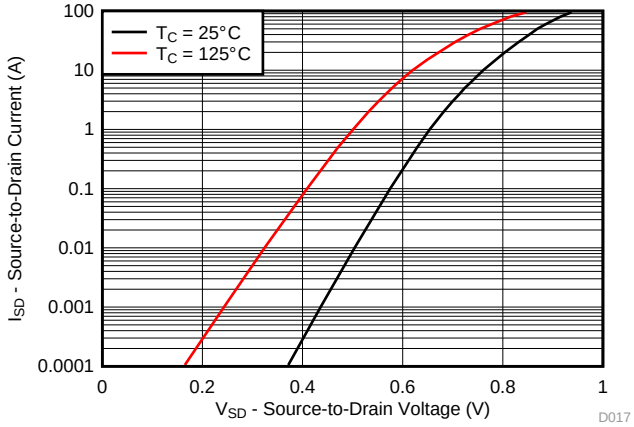

Figure 24. Sync MOSFET Body Diode

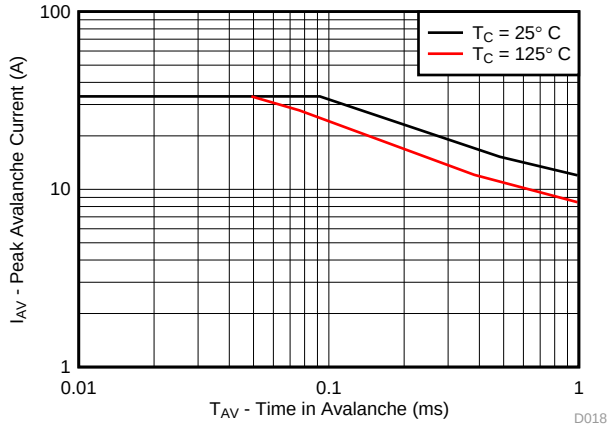

Figure 25. Control MOSFET Unclamped Inductive Switching

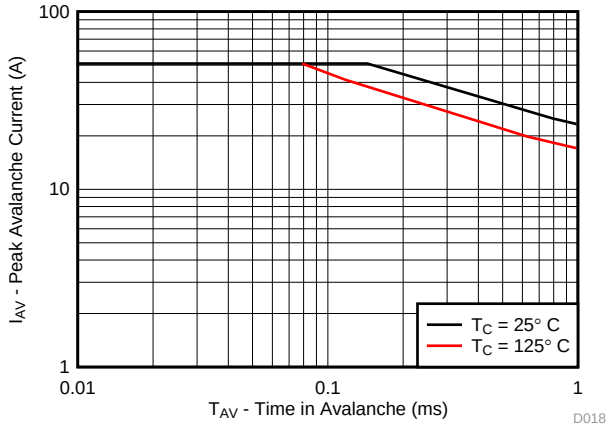

Figure 26. Sync MOSFET Unclamped Inductive Switching

Copyright © 2016–2018, Texas Instruments Incorporated

6 Applications and Implementation

NOTE

Information in the following applications sections is not part of the TI component specification, and TI does not warrant its accuracy or completeness. TI's customers are responsible for determining suitability of components for their purposes. Customers should validate and test their design implementation to confirm system functionality.

6.1 Application Information

6.1.1 Equivalent System Performance

Many of today's high-performance computing systems require low-power consumption in an effort to reduce system operating temperatures and improve overall system efficiency. This has created a major emphasis on improving the conversion efficiency of today's synchronous buck topology. In particular, there has been an emphasis in improving the performance of the critical power semiconductor in the power stage of this application (see Figure 27). As such, optimization of the power semiconductors in these applications, needs to go beyond simply reducing $R_{DS(ON)}$.

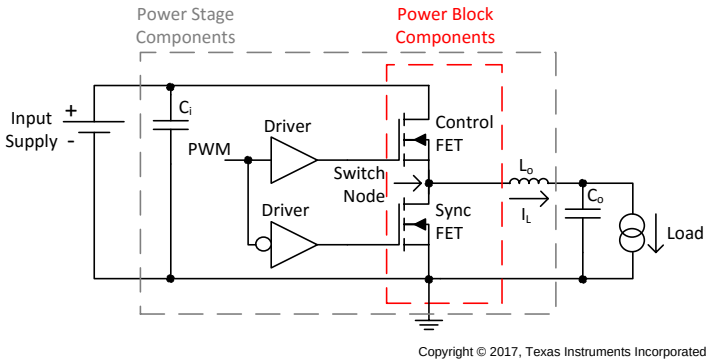

Figure 27. Equivalent System Schematic

The CSD87335Q3D is part of TI's power block product family which is a highly optimized product for use in a synchronous buck topology requiring high current, high efficiency, and high frequency. It incorporates TI's latest generation silicon which has been optimized for switching performance, as well as minimizing losses associated with Q_{GD}, Q_{GS}, and Q_{RR}. Furthermore, TI's patented packaging technology has minimized losses by nearly eliminating parasitic elements between the control FET and sync FET connections (see Figure 28). A key challenge solved by TI's patented packaging technology is the system level impact of Common Source Inductance (CSI). CSI greatly impedes the switching characteristics of any MOSFET which in turn increases switching losses and reduces system efficiency. As a result, the effects of CSI need to be considered during the MOSFET selection process. In addition, standard MOSFET switching loss equations used to predict system efficiency need to be modified in order to account for the effects of CSI. Further details behind the effects of CSI and modification of switching loss equations are outlined in *Power Loss Calculation With Common Source Inductance Consideration for Synchronous Buck Converters* (SLPA009).

Copyright © 2016–2018, Texas Instruments Incorporated

Application Information (continued)

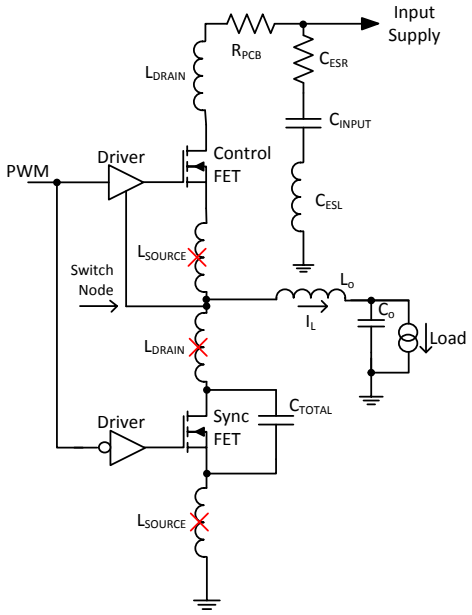

Figure 28. Elimination of Parasitic Inductances

The combination of TI's latest generation silicon and optimized packaging technology has created a benchmarking solution that outperforms industry standard MOSFET chipsets of similar $R_{DS(ON)}$ and MOSFET chipsets with lower $R_{DS(ON)}$. Figure 29 and Figure 30 compare the efficiency and power loss performance of the CSD87335Q3D versus industry standard MOSFET chipsets commonly used in this type of application. This comparison purely focuses on the efficiency and generated loss of the power semiconductors only. The performance of CSD87335Q3D clearly highlights the importance of considering the effective AC on-impedance ($Z_{DS(ON)}$) during the MOSFET selection process of any new design. Simply normalizing to traditional MOSFET $R_{DS(ON)}$ specifications is not an indicator of the actual in-circuit performance when using TI's power block technology.

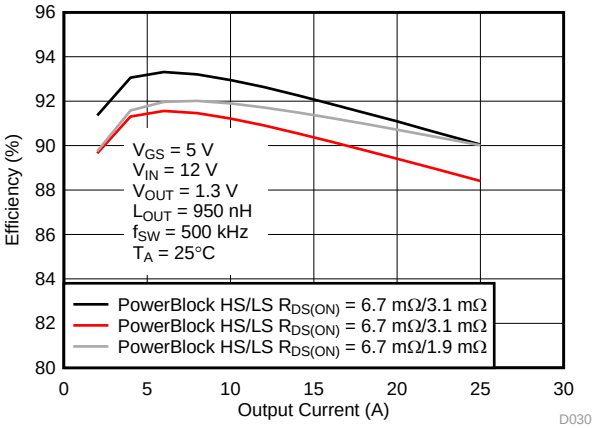

Figure 29. Efficiency

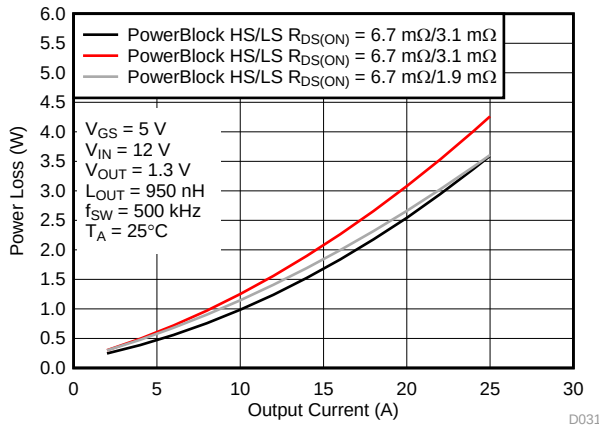

Figure 30. Power Loss

Copyright © 2016–2018, Texas Instruments Incorporated

Application Information (continued)

Table 1 compares the traditional DC measured $R_{DS(ON)}$ of CSD87335Q3D versus its $Z_{DS(ON)}$. This comparison takes into account the improved efficiency associated with TI's patented packaging technology. As such, when comparing TI's power block products to individually packaged discrete MOSFETs or dual MOSFETs in a standard package, the in-circuit switching performance of the solution must be considered. In this example, individually packaged discrete MOSFETs or dual MOSFETs in a standard package would need to have DC measured $R_{DS(ON)}$ values that are equivalent to CSD87335Q3D's $Z_{DS(ON)}$ value in order to have the same efficiency performance at full load. Mid to light-load efficiency will still be lower with individually packaged discrete MOSFETs or dual MOSFETs in a standard package.

Table 1. Comparison of $R_{DS(ON)}$ vs. $Z_{DS(ON)}$

PARAMETER	HS		LS	
	TYP	MAX	TYP	MAX
Effective AC on-impedance $Z_{DS(ON)}$ (V_{GS} = 5 V)	6.7	—	1.9	—
DC measured $R_{DS(ON)}$ (V_{GS} = 4.5 V)	6.7	8.1	3.1	3.9

The CSD87335Q3D NexFET™ power block is an optimized design for synchronous buck applications using 5-V gate drive. The control FET and sync FET silicon are parametrically tuned to yield the lowest power loss and highest system efficiency. As a result, a new rating method is needed which is tailored towards a more systems-centric environment. System-level performance curves such as power loss, Safe Operating Area (SOA), and normalized graphs allow engineers to predict the product performance in the actual application.

6.2 Power Loss Curves

MOSFET centric parameters such as $R_{DS(ON)}$ and Q_{gd} are needed to estimate the loss generated by the devices. In an effort to simplify the design process for engineers, Texas Instruments has provided measured power loss performance curves. Figure 1 plots the power loss of the CSD87335Q3D as a function of load current. This curve is measured by configuring and running the CSD87335Q3D as it would be in the final application (see Figure 31).The measured power loss is the CSD87335Q3D loss and consists of both input conversion loss and gate drive loss. Equation 1 is used to generate the power loss curve.

$$(V_{IN} \times I_{IN}) + (V_{DD} \times I_{DD}) - (V_{SW_AVG} \times I_{OUT}) = \text{Power loss} \quad (1)$$

The power loss curve in Figure 1 is measured at the maximum recommended junction temperatures of 125°C under isothermal test conditions.

6.3 Safe Operating Curves (SOA)

The SOA curves in the CSD87335Q3D data sheet provides guidance on the temperature boundaries within an operating system by incorporating the thermal resistance and system power loss. to Figure 4 outline the temperature and airflow conditions required for a given load current. The area under the curve dictates the safe operating area. All the curves are based on measurements made on a PCB design with dimensions of 4 in (W) × 3.5 in (L) × 0.062 in (T) and 6 copper layers of 1-oz copper thickness.

6.4 Normalized Curves

The normalized curves in the CSD87335Q3D data sheet provides guidance on the power loss and SOA adjustments based on their application specific needs. These curves show how the power loss and SOA boundaries will adjust for a given set of systems conditions. The primary Y-axis is the normalized change in power loss and the secondary Y-axis is the change in system temperature required in order to comply with the SOA curve. The change in power loss is a multiplier for the power loss curve and the change in temperature is subtracted from the SOA curve.

Copyright © 2016–2018, Texas Instruments Incorporated

Normalized Curves (continued)

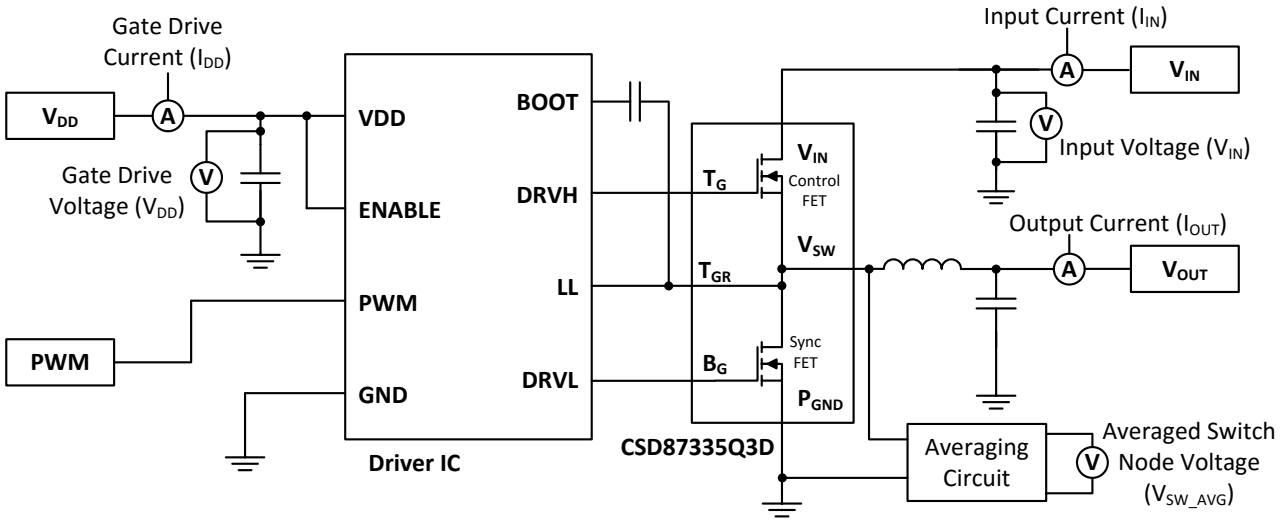

Copyright © 2017, Texas Instruments Incorporated

Figure 31. Typical Application

6.5 Calculating Power Loss and SOA

The user can estimate product loss and SOA boundaries by arithmetic means (see *Design Example* section). Though the power loss and SOA curves in this data sheet are taken for a specific set of test conditions, the following procedure will outline the steps the user should take to predict product performance for any set of system conditions.

6.5.1 Design Example

Operating conditions:

- Output current = 15 A
- Input voltage = 14 V
- Output voltage = 1.4 V
- Switching frequency = 750 kHz
- Inductor = 600 nH

6.5.2 Calculating Power Loss

- Power loss at 15 A = 1.92 W (Figure 1)
- Normalized power loss for input voltage ≈ 1.01 (Figure 6)
- Normalized power loss for output voltage ≈ 1.01 (Figure 7)
- Normalized power loss for switching frequency ≈ 1.08 (Figure 5)
- Normalized power loss for output inductor ≈ 1.01 (Figure 8)
- **Final calculated power loss = 1.92 W × 1.01 × 1.01 × 1.08 × 1.01 ≈ 2.14 W**

6.5.3 Calculating SOA Adjustments

- SOA adjustment for input voltage ≈ 0.14°C (Figure 6)
- SOA adjustment for output voltage ≈ 0.17°C (Figure 7)
- SOA adjustment for switching frequency ≈ 1.32°C (Figure 5)
- SOA adjustment for output inductor ≈ 0.18°C (Figure 8)
- **Final calculated SOA adjustment = 0.14 + 0.17 + 1.32 + 0.18 ≈ 1.81°C**

Calculating Power Loss and SOA (continued)

In the design example above, the estimated power loss of the CSD87335Q3D would increase to 2.14 W. In addition, the maximum allowable board and/or ambient temperature would have to decrease by 1.81°C. Figure 32 graphically shows how the SOA curve would be adjusted accordingly.

1. Start by drawing a horizontal line from the application current to the SOA curve.
2. Draw a vertical line from the SOA curve intercept down to the board/ambient temperature.
3. Adjust the SOA board/ambient temperature by subtracting the temperature adjustment value.

In the design example, the SOA temperature adjustment yields a reduction in allowable board/ambient temperature of 1.81°C. In the event the adjustment value is a negative number, subtracting the negative number would yield an increase in allowable board/ambient temperature.

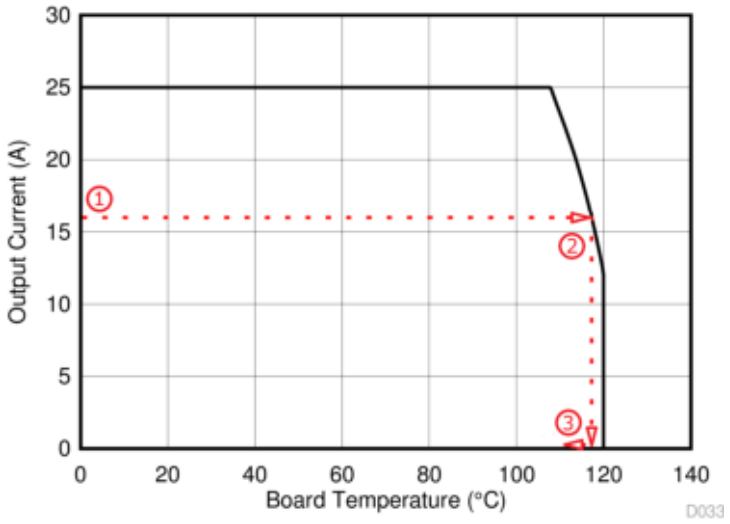

Figure 32. Power Block SOA

Copyright © 2016–2018, Texas Instruments Incorporated

7 Recommended PCB Design Overview

There are two key system-level parameters that can be addressed with a proper PCB design: electrical and thermal performance. Properly optimizing the PCB layout will yield maximum performance in both areas. A brief description on how to address each parameter is provided.

7.1 Electrical Performance

The power block has the ability to switch voltages at rates greater than 10 kV/µs. Special care must be then taken with the PCB layout design and placement of the input capacitors, driver IC, and output inductor.

- The placement of the input capacitors relative to the power block's VIN and PGND pins should have the highest priority during the component placement routine. It is critical to minimize these node lengths. As such, ceramic input capacitors need to be placed as close as possible to the VIN and PGND pins (see Figure 33). The example in Figure 33 uses 6 × 10-µF ceramic capacitors (TDK Part # C3216X5R1C106KT or equivalent). Notice there are ceramic capacitors on both sides of the board with an appropriate amount of vias interconnecting both layers. In terms of priority of placement next to the power block, C5, C7, C19, and C8 should follow in order.
- The driver IC should be placed relatively close to the power block gate pins. T_G and B_G should connect to the outputs of the driver IC. The T_{GR} pin serves as the return path of the high-side gate drive circuitry and should be connected to the phase pin of the IC (sometimes called LX, LL, SW, PH, etc.). The bootstrap capacitor for the driver IC will also connect to this pin.
- The switching node of the output inductor should be placed relatively close to the power block VSW pins. Minimizing the node length between these two components will reduce the PCB conduction losses and actually reduce the switching noise level. In the event the switch node waveform exhibits ringing that reaches undesirable levels, the use of a boost resistor or RC snubber can be an effective way to easily reduce the peak ring level. The recommended boost resistor value will range between 1 Ω to 4.7 Ω depending on the output characteristics of driver IC used in conjunction with the power block. The RC snubber values can range from 0.5 Ω to 2.2 Ω for the R and 330 pF to 2200 pF for the C. Please refer to *Snubber Circuits: Theory, Design and Application* (SLUP100) for more details on how to properly tune the RC snubber values. The RC snubber should be placed as close as possible to the Vsw node and PGND (see Figure 33). (1)

(1) Keong W. Kam, David Pommerenke, "EMI Analysis Methods for Synchronous Buck Converter EMI Root Cause Analysis", University of Missouri – Rolla

Copyright © 2016–2018, Texas Instruments Incorporated

7.2 Thermal Performance

The power block has the ability to utilize the GND planes as the primary thermal path. As such, the use of thermal vias is an effective way to pull away heat from the device and into the system board. Concerns of solder voids and manufacturability problems can be addressed by the use of three basic tactics to minimize the amount of solder attach that will wick down the via barrel:

- Intentionally space out the vias from each other to avoid a cluster of holes in a given area.
- Use the smallest drill size allowed in your design. The example in Figure 33 uses vias with a 10-mil drill hole and a 16-mil capture pad.
- Tent the opposite side of the via with solder-mask.

In the end, the number and drill size of the thermal vias should align with the end user's PCB design rules and manufacturing capabilities.

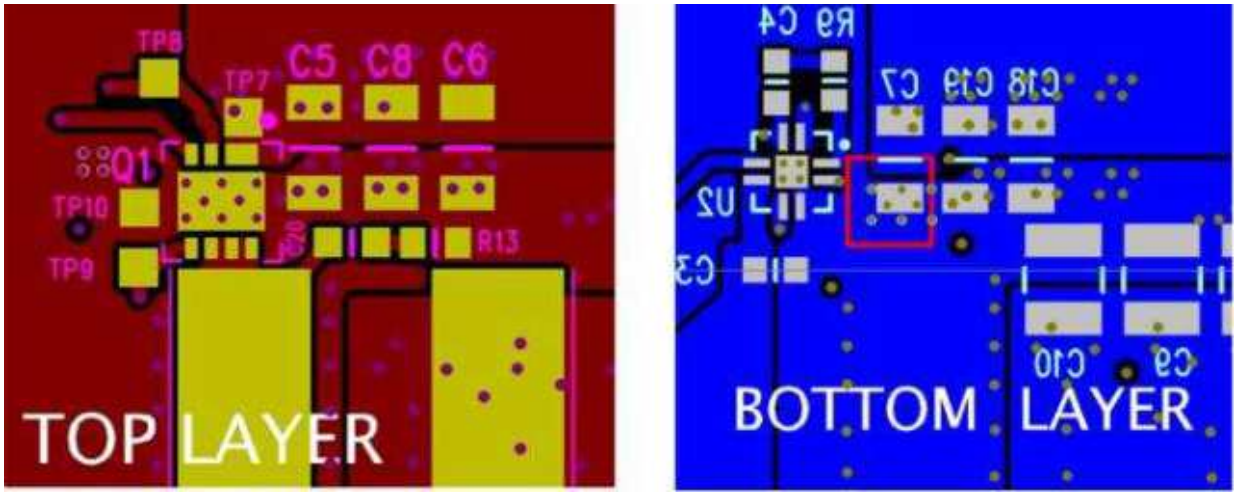

Figure 33. Recommended PCB Layout (Top Down)

Copyright © 2016–2018, Texas Instruments Incorporated

8 Device and Documentation Support

8.1 Receiving Notification of Documentation Updates

To receive notification of documentation updates, navigate to the device product folder on ti.com. In the upper right corner, click on *Alert me* to register and receive a weekly digest of any product information that has changed. For change details, review the revision history included in any revised document.

8.2 Community Resources

The following links connect to TI community resources. Linked contents are provided "AS IS" by the respective contributors. They do not constitute TI specifications and do not necessarily reflect TI's views; see TI's Terms of Use.

TI E2E™ Online Community ***TI's Engineer-to-Engineer (E2E) Community.*** Created to foster collaboration among engineers. At e2e.ti.com, you can ask questions, share knowledge, explore ideas and help solve problems with fellow engineers.

Design Support ***TI's Design Support*** Quickly find helpful E2E forums along with design support tools and contact information for technical support.

8.3 Trademarks

NexFET, E2E are trademarks of Texas Instruments.
All other trademarks are the property of their respective owners.

8.4 Electrostatic Discharge Caution



These devices have limited built-in ESD protection. The leads should be shorted together or the device placed in conductive foam during storage or handling to prevent electrostatic damage to the MOS gates.

8.5 Glossary

SLYZ022 — *TI Glossary*.

This glossary lists and explains terms, acronyms, and definitions.

Copyright © 2016–2018, Texas Instruments Incorporated

9 Mechanical, Packaging, and Orderable Information

The following pages include mechanical, packaging, and orderable information. This information is the most current data available for the designated devices. This data is subject to change without notice and revision of this document. For browser-based versions of this data sheet, refer to the left-hand navigation.

9.1 Q3D Package Dimensions

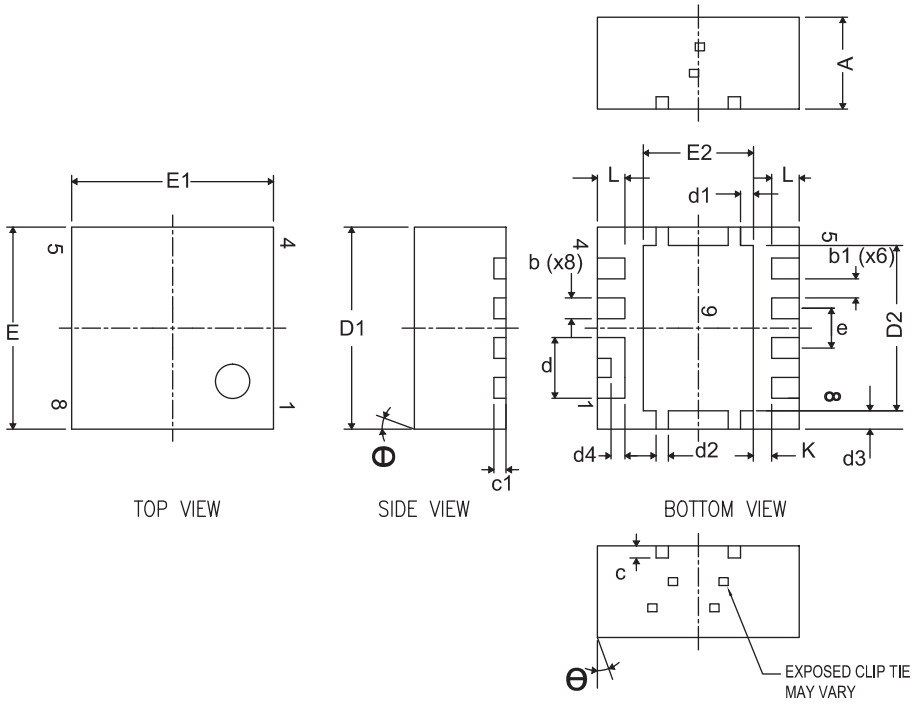

DIM	MILLIMETERS		INCHES	
	MIN	MAX	MIN	MAX
A	1.400	1.500	0.055	0.059
b	0.280	0.400	0.011	0.016
b1	0.310 NOM		0.012 NOM	
c	0.150	0.250	0.006	0.010
c1	0.150	0.250	0.006	0.010
d	0.940	1.040	0.037	0.041
d1	0.160	0.260	0.006	0.010
d2	0.150	0.250	0.006	0.010
d3	0.250	0.350	0.010	0.014
d4	0.175	0.275	0.007	0.011
D1	3.200	3.400	0.126	0.134
D2	2.650	2.750	0.104	0.108
E	3.200	3.400	0.126	0.134
E1	3.200	3.400	0.126	0.134
E2	1.750	1.850	0.069	0.073
e	0.650 TYP		0.026 TYP	
L	0.400	0.500	0.016	0.020
θ	0.00	—	—	—
K	0.300 TYP		0.012 TYP	

Copyright © 2016–2018, Texas Instruments Incorporated

9.2 Land Pattern Recommendation

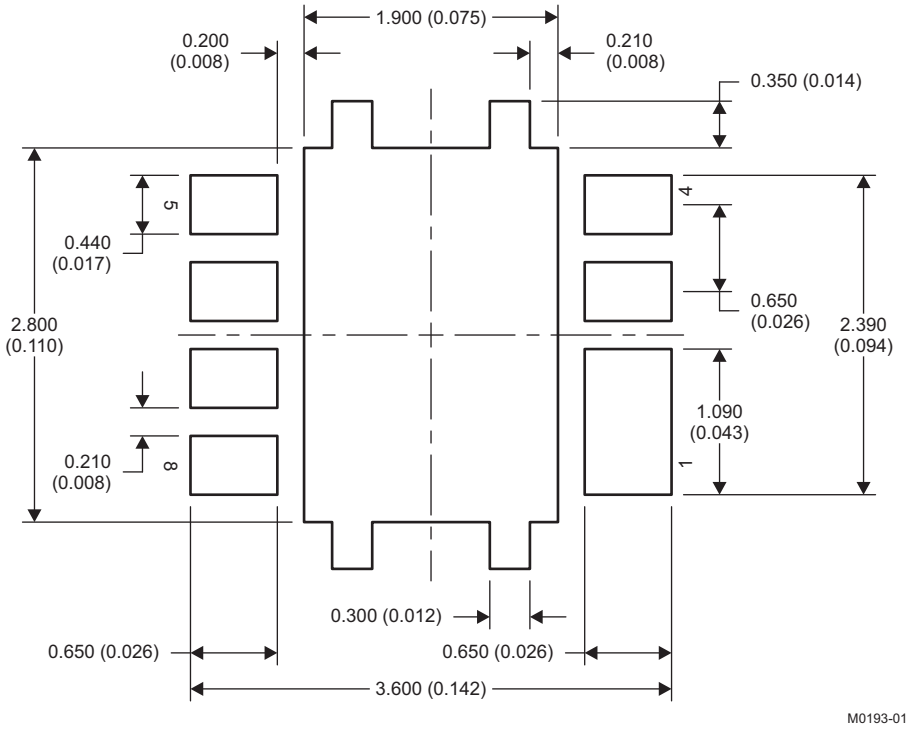

NOTE: Dimensions are in mm (inches).

9.3 Stencil Recommendation

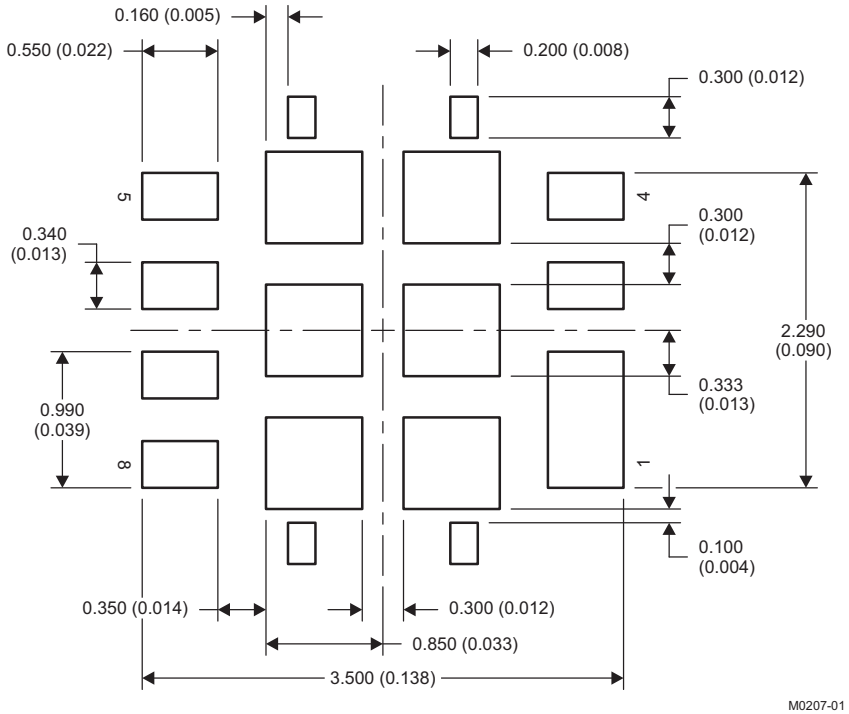

NOTE: Dimensions are in mm (inches).

For recommended circuit layout for PCB designs, see *Reducing Ringing Through PCB Layout Techniques* (SLPA005).

Copyright © 2016–2018, Texas Instruments Incorporated

9.4 Q3D Tape and Reel Information

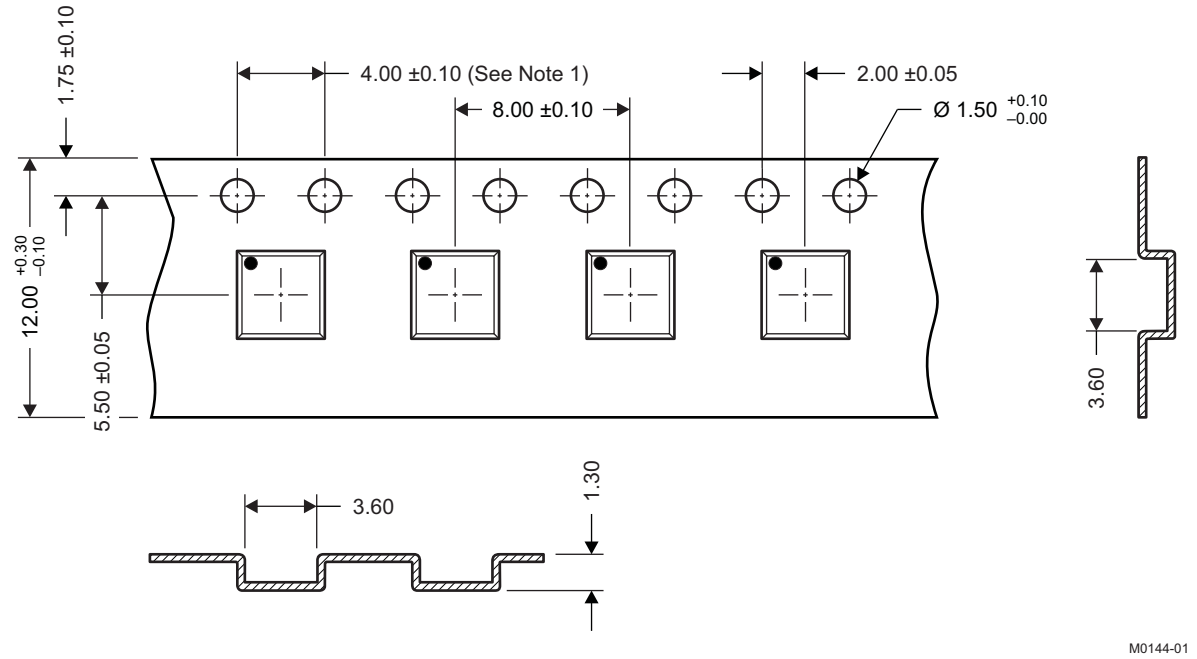

NOTES: 1. 10-sprocket hole-pitch cumulative tolerance ±0.2.
2. Camber not to exceed 1 mm in 100 mm, noncumulative over 250 mm.
3. Material: black static-dissipative polystyrene.
4. All dimensions are in mm, unless otherwise specified.
5. Thickness: 0.3 ±0.05 mm.
6. MSL1 260°C (IR and convection) PbF reflow compatible.

9.5 Pin Configuration

POSITION	DESIGNATION
Pin 1	V_{IN}
Pin 2	V_{IN}
Pin 3	T_G
Pin 4	T_{GR}
Pin 5	B_G
Pin 6	V_{SW}
Pin 7	V_{SW}
Pin 8	V_{SW}
Pin 9	P_{GND}

Copyright © 2016–2018, Texas Instruments Incorporated

PACKAGING INFORMATION

Orderable part number	Status (1)	Material type (2)	Package | Pins	Package qty | Carrier	RoHS (3)	Lead finish/ Ball material (4)	MSL rating/ Peak reflow (5)	Op temp (°C)	Part marking (6)
CSD87335Q3D	Active	Production	LSON-CLIP (DQZ) | 8	2500 | LARGE T&R	ROHS Exempt	NIPDAU | SN	Level-1-260C-UNLIM	-55 to 150	87335D
CSD87335Q3D.B	Active	Production	LSON-CLIP (DQZ) | 8	2500 | LARGE T&R	ROHS Exempt	NIPDAU	Level-1-260C-UNLIM	-55 to 150	87335D
CSD87335Q3DG4	Active	Production	LSON-CLIP (DQZ) | 8	2500 | LARGE T&R	ROHS Exempt	NIPDAU	Level-1-260C-UNLIM	-55 to 150	87335D
CSD87335Q3DG4.B	Active	Production	LSON-CLIP (DQZ) | 8	2500 | LARGE T&R	ROHS Exempt	NIPDAU	Level-1-260C-UNLIM	-55 to 150	87335D
CSD87335Q3DT	Active	Production	LSON-CLIP (DQZ) | 8	250 | SMALL T&R	ROHS Exempt	NIPDAU | SN	Level-1-260C-UNLIM	-55 to 150	87335D
CSD87335Q3DT.B	Active	Production	LSON-CLIP (DQZ) | 8	250 | SMALL T&R	ROHS Exempt	NIPDAU	Level-1-260C-UNLIM	-55 to 150	87335D

(1) **Status:** For more details on status, see our product life cycle.

(2) **Material type:** When designated, preproduction parts are prototypes/experimental devices, and are not yet approved or released for full production. Testing and final process, including without limitation quality assurance, reliability performance testing, and/or process qualification, may not yet be complete, and this item is subject to further changes or possible discontinuation. If available for ordering, purchases will be subject to an additional waiver at checkout, and are intended for early internal evaluation purposes only. These items are sold without warranties of any kind.

(3) **RoHS values:** Yes, No, RoHS Exempt. See the TI RoHS Statement for additional information and value definition.

(4) **Lead finish/Ball material:** Parts may have multiple material finish options. Finish options are separated by a vertical ruled line. Lead finish/Ball material values may wrap to two lines if the finish value exceeds the maximum column width.

(5) **MSL rating/Peak reflow:** The moisture sensitivity level ratings and peak solder (reflow) temperatures. In the event that a part has multiple moisture sensitivity ratings, only the lowest level per JEDEC standards is shown. Refer to the shipping label for the actual reflow temperature that will be used to mount the part to the printed circuit board.

(6) **Part marking:** There may be an additional marking, which relates to the logo, the lot trace code information, or the environmental category of the part.

Multiple part markings will be inside parentheses. Only one part marking contained in parentheses and separated by a "~" will appear on a part. If a line is indented then it is a continuation of the previous line and the two combined represent the entire part marking for that device.

Important Information and Disclaimer: The information provided on this page represents TI's knowledge and belief as of the date that it is provided. TI bases its knowledge and belief on information provided by third parties, and makes no representation or warranty as to the accuracy of such information. Efforts are underway to better integrate information from third parties. TI has taken and continues to take reasonable steps to provide representative and accurate information but may not have conducted destructive testing or chemical analysis on incoming materials and chemicals. TI and TI suppliers consider certain information to be proprietary, and thus CAS numbers and other limited information may not be available for release.

In no event shall TI's liability arising out of such information exceed the total purchase price of the TI part(s) at issue in this document sold by TI to Customer on an annual basis.

PACKAGE OUTLINE

DQZ0008A

LSON-CLIP - 1.55 mm max height

PLASTIC SMALL OUTLINE - NO LEAD

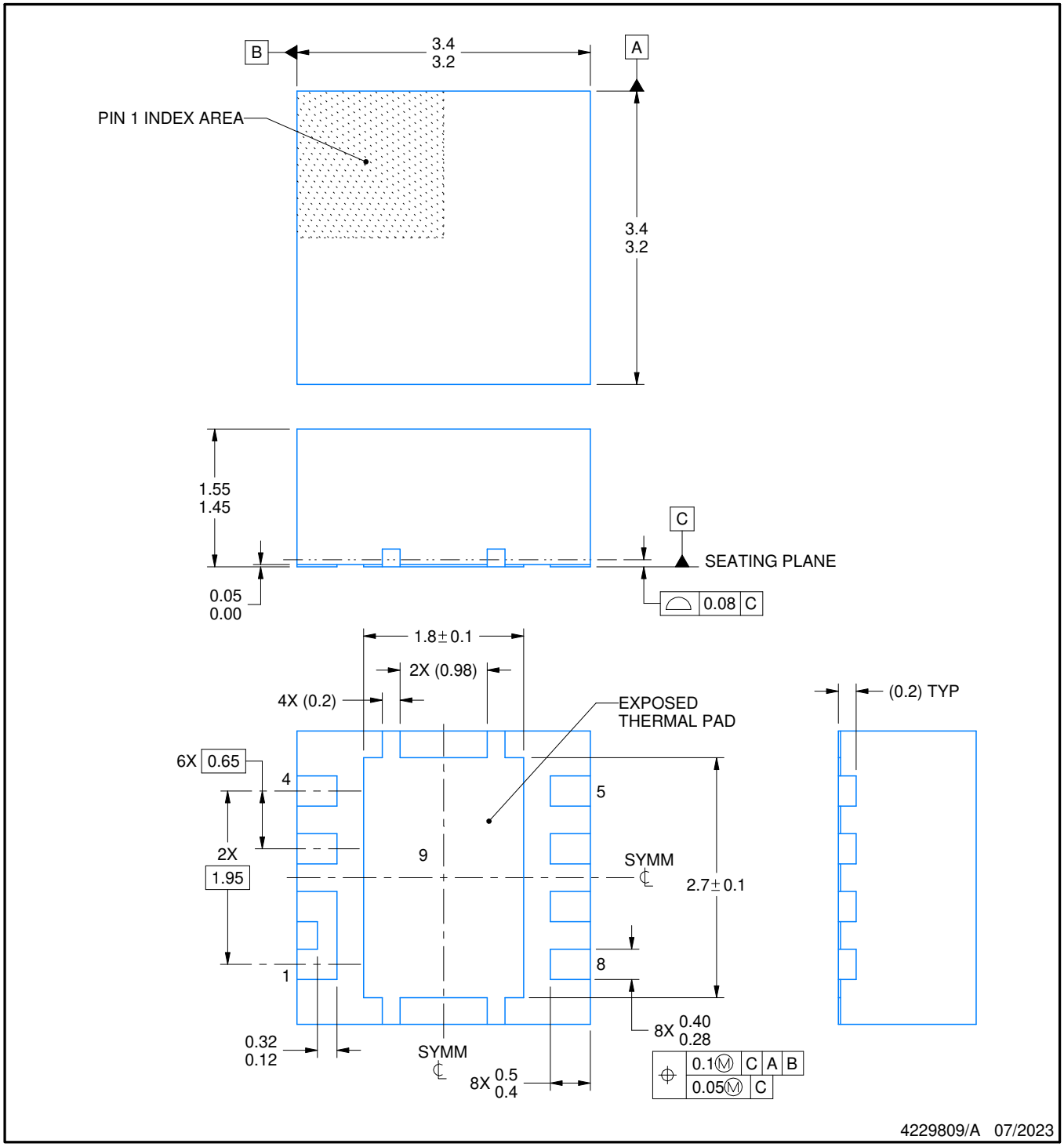

NOTES:

1. All linear dimensions are in millimeters. Any dimensions in parenthesis are for reference only. Dimensioning and tolerancing per ASME Y14.5M.
2. This drawing is subject to change without notice.
3. The package thermal pad must be soldered to the printed circuit board for thermal and mechanical performance.

EXAMPLE BOARD LAYOUT

DQZ0008A

LSON-CLIP - 1.55 mm max height

PLASTIC SMALL OUTLINE - NO LEAD

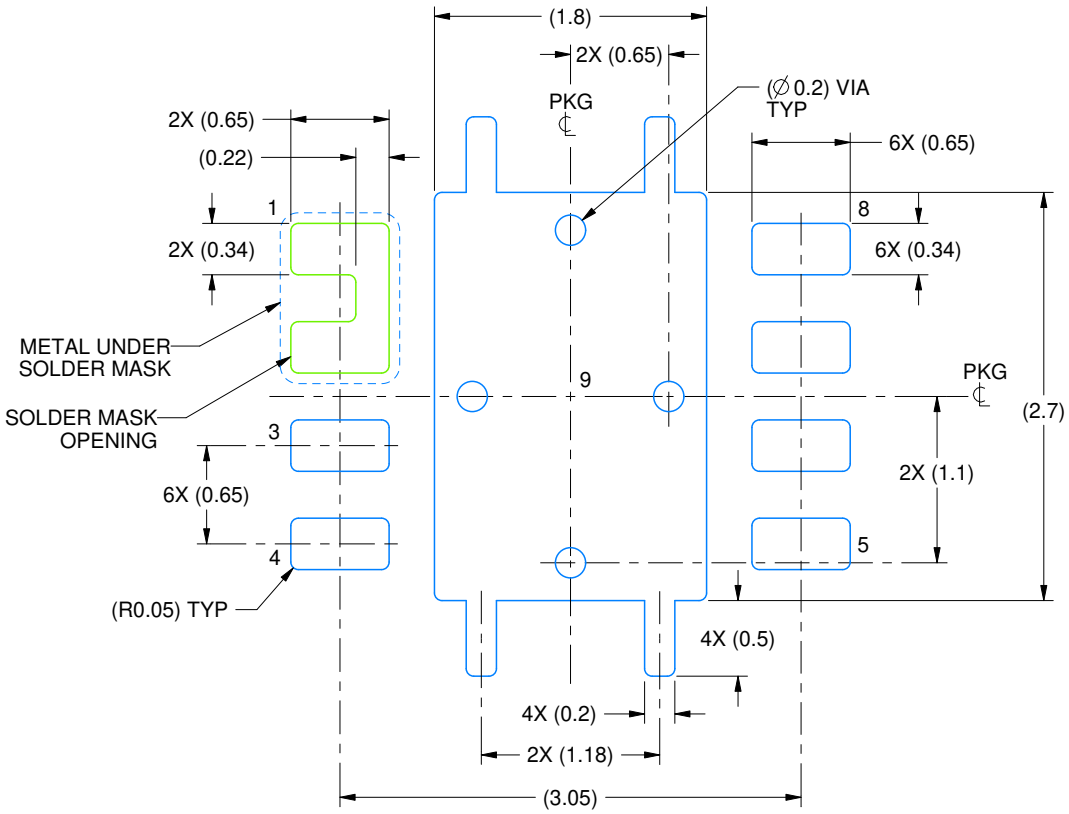

LAND PATTERN EXAMPLE
SCALE:20X

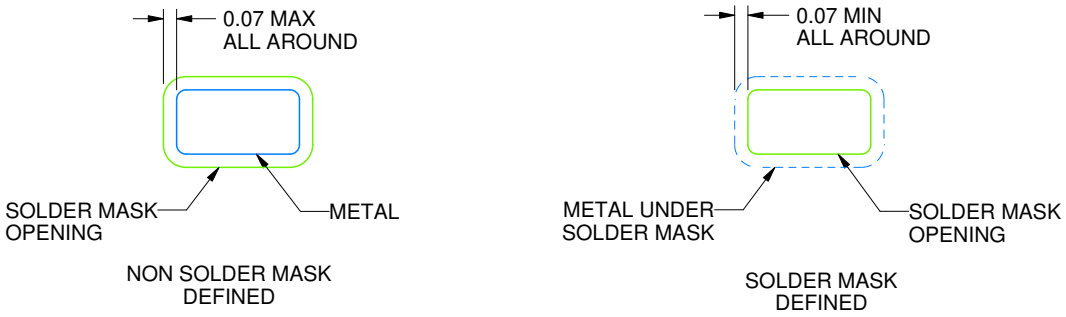

SOLDER MASK DETAILS

4229809/A 07/2023

NOTES: (continued)

4. This package is designed to be soldered to a thermal pad on the board. For more information, see Texas Instruments literature number SLUA271 (www.ti.com/lit/slua271).
5. Vias are optional depending on application, refer to device data sheet. If some or all are implemented, recommended via locations are shown.

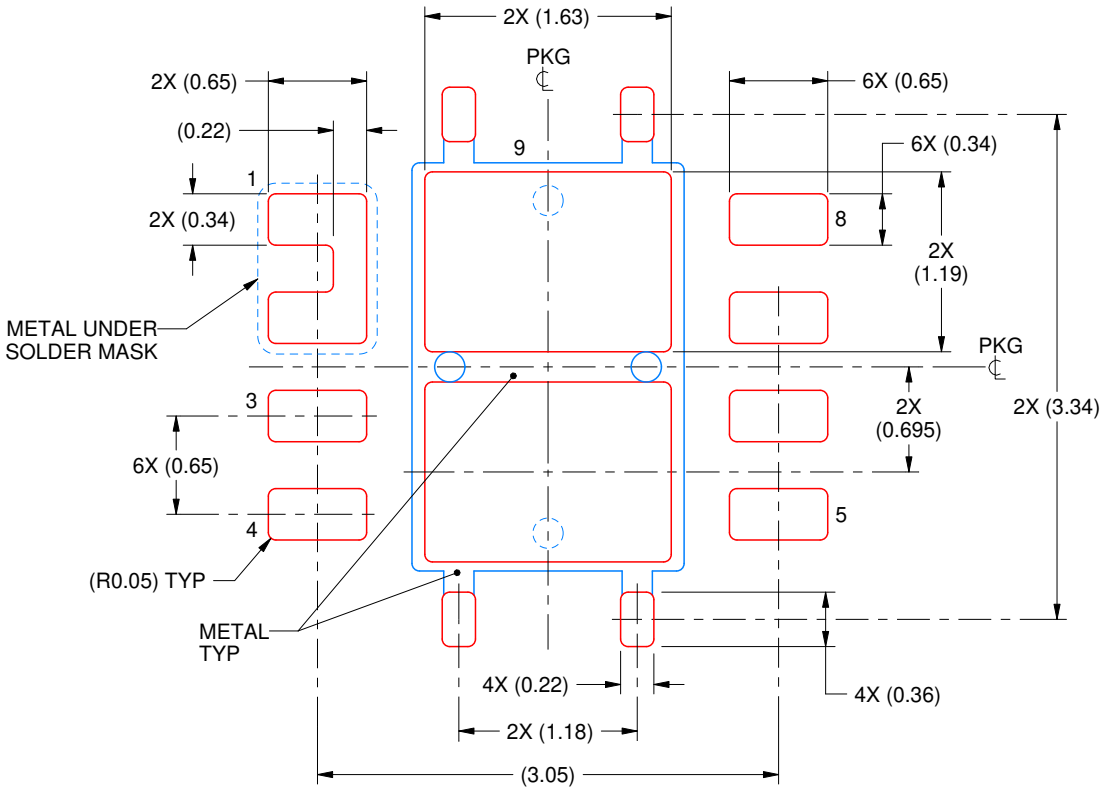

SOLDER PASTE EXAMPLE
BASED ON 0.125 mm THICK STENCIL

EXPOSED PAD 9
76% PRINTED SOLDER COVERAGE BY AREA UNDER PACKAGE
SCALE:20X

4229809/A 07/2023

NOTES: (continued)

6. Laser cutting apertures with trapezoidal walls and rounded corners may offer better paste release. IPC-7525 may have alternate design recommendations.

IMPORTANT NOTICE AND DISCLAIMER

TI PROVIDES TECHNICAL AND RELIABILITY DATA (INCLUDING DATASHEETS), DESIGN RESOURCES (INCLUDING REFERENCE DESIGNS), APPLICATION OR OTHER DESIGN ADVICE, WEB TOOLS, SAFETY INFORMATION, AND OTHER RESOURCES “AS IS” AND WITH ALL FAULTS, AND DISCLAIMS ALL WARRANTIES, EXPRESS AND IMPLIED, INCLUDING WITHOUT LIMITATION ANY IMPLIED WARRANTIES OF MERCHANTABILITY, FITNESS FOR A PARTICULAR PURPOSE OR NON-INFRINGEMENT OF THIRD PARTY INTELLECTUAL PROPERTY RIGHTS.

These resources are intended for skilled developers designing with TI products. You are solely responsible for (1) selecting the appropriate TI products for your application, (2) designing, validating and testing your application, and (3) ensuring your application meets applicable standards, and any other safety, security, regulatory or other requirements.

These resources are subject to change without notice. TI grants you permission to use these resources only for development of an application that uses the TI products described in the resource. Other reproduction and display of these resources is prohibited. No license is granted to any other TI intellectual property right or to any third party intellectual property right. TI disclaims responsibility for, and you fully indemnify TI and its representatives against any claims, damages, costs, losses, and liabilities arising out of your use of these resources.

TI’s products are provided subject to TI’s Terms of Sale, TI’s General Quality Guidelines, or other applicable terms available either on ti.com or provided in conjunction with such TI products. TI’s provision of these resources does not expand or otherwise alter TI’s applicable warranties or warranty disclaimers for TI products. Unless TI explicitly designates a product as custom or customer-specified, TI products are standard, catalog, general purpose devices.

TI objects to and rejects any additional or different terms you may propose.

Copyright © 2025, Texas Instruments Incorporated

Last updated 10/2025