CUI Devices is now Same Sky! Learn More

MODEL: CSS-1021028N | DESCRIPTION: SPEAKER

FEATURES

- 107 dB SPL
- 10 W input
- Nd-Fe-B magnet



RoHS

SPECIFICATIONS

parameter	conditions/description	min	typ	max	units
input power	maximum power: IEC-60268-5, filter 60s on/120s off, 10 cycles at room temp		10	12	W
impedance	at 800 Hz	6.8	8	9.2	Ω
resonant frequency (Fo)	at 1.0 V	92	115	138	Hz
frequency response	output SPL -10 dB	Fo		7,800	Hz
sound pressure level	at 1 W, 0.1 m ave, at 1.0, 1.4, 1.7, 2.0 kHz	104	107	110	dB
distortion	at 1.0 kHz, 1 W			10	%
buzz, rattle, etc.	must be normal at sine wave between Fo ~ 20,000 Hz		8.94		V
dimensions	102 x 102 x 35.5				mm
magnet	Nd-Fe-B				
material	metal				
cone material	paper cone & foam edge				
terminal	solder terminals				
weight			208		g
operating temperature		-20		55	°C
storage temperature		-30		70	°C
RoHS	yes				

Notes: 1. All specifications measured at 15~35°C, humidity at 45~85%, under 86~106 kPa pressure, unless otherwise noted.

SOLDERABILITY

parameter	conditions/description	min	typ	max	units
hand soldering	for 3 ±1 seconds	360	370	380	°C

MECHANICAL DRAWING

units: mm
tolerance: ±0.2 mm

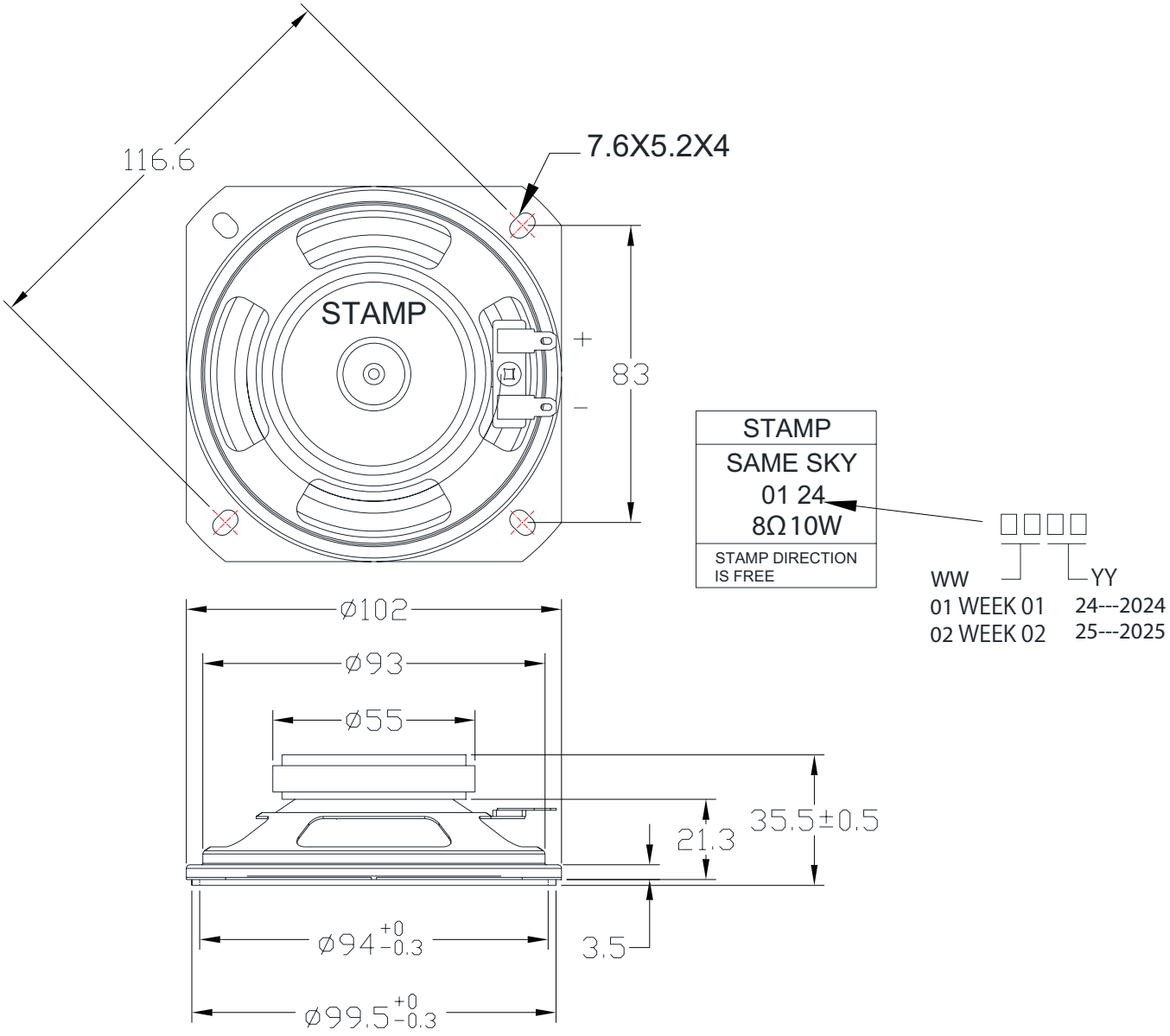

RESPONSE CURVES

Frequency Response Curve

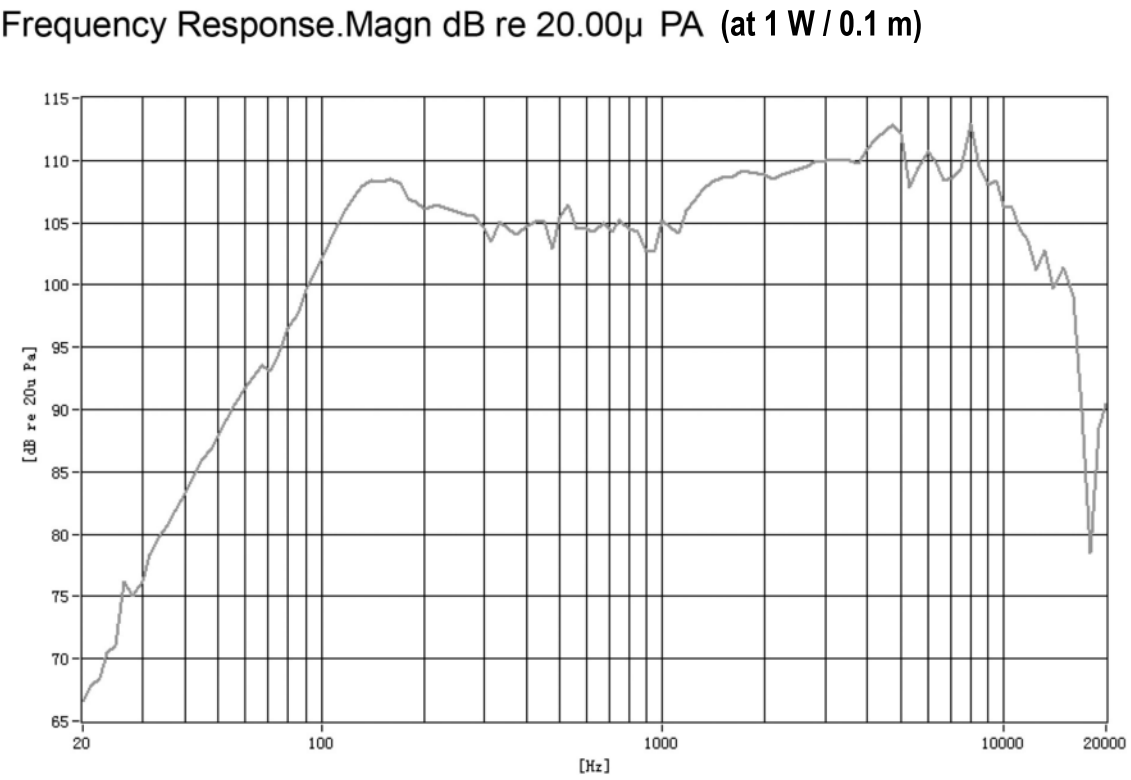

THIELE-SMALL PARAMETERS

parameter	conditions/description	typ
Mechanical Q Factor	Qms	7.436
Electrical Q Factor	Qes	2.012
Total Q Factor	Qts	1.583
Compliance Equivalent Volume	Vas	1.8889

Notes: 2. Results represent typical performance in Free Air conditions.

PACKAGING

units: mm

Carton Size: 491 x 339 x 212 mm
Carton QTY: 72 pcs per carton
N.W: 15 KGS
G.W: 17 KGS

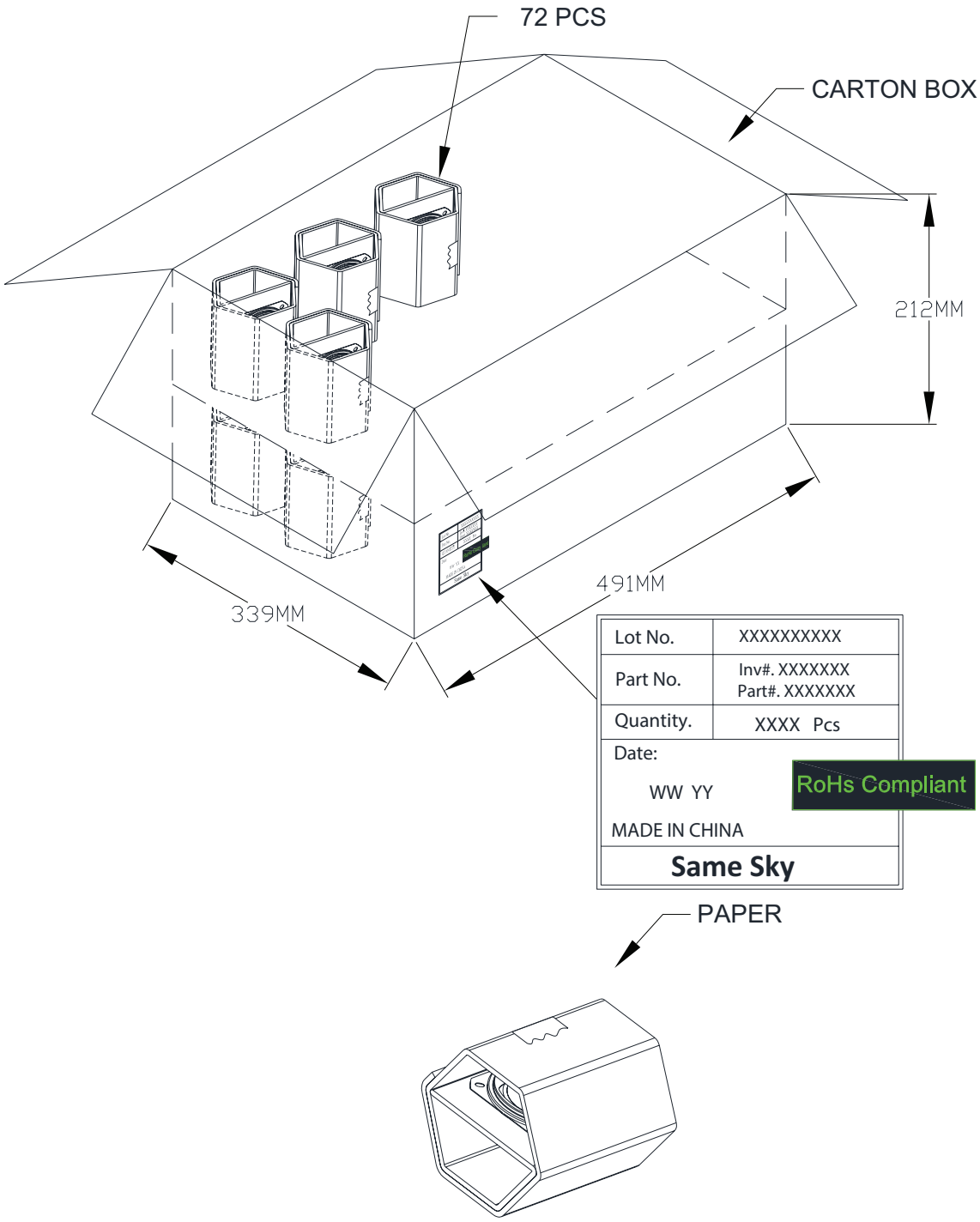

REVISION HISTORY

rev.	description	date
1.0	initial release	06/22/2016
1.01	changed packaging	11/07/2018
1.02	brand update	01/22/2020
1.03	logo, datasheet style update	08/05/2022
1.04	CUI Devices rebranded to Same Sky	09/11/2024
1.05	added Thiele-Small Parameters	02/26/2025

The revision history provided is for informational purposes only and is believed to be accurate.

Same Sky offers a one (1) year limited warranty. Complete warranty information is listed on our website.

Same Sky reserves the right to make changes to the product at any time without notice. Information provided by Same Sky is believed to be accurate and reliable. However, no responsibility is assumed by Same Sky for its use, nor for any infringements of patents or other rights of third parties which may result from its use.

Same Sky products are not authorized or warranted for use as critical components in equipment that requires an extremely high level of reliability. A critical component is any component of a life support device or system whose failure to perform can be reasonably expected to cause the failure of the life support device or system, or to affect its safety or effectiveness.