CT0805LSF Series

From 78 nH to 47000 nH



SPECIFICATIONS

Please specify tolerance code when ordering.
CT0805LSF-78N_ ◄—— J = ±5%, K = ±10%

Part Number	Inductance (nH)	L Test Freq. (MHz)	Q Fact. Min.	Q Test Freq. (MHz)	SRF Min. (MHz)	DCR Max. (Ω)	Rated DC (mA)
CT0805LSF-78N_	78	7.9	19	7.9	1400	0.06	2000
CT0805LSF-111_	110	7.9	19	7.9	1200	0.07	2000
CT0805LSF-471_	470	7.9	19	7.9	480	0.40	800
CT0805LSF-681_	680	7.9	20	7.9	480	0.40	800
CT0805LSF-102_	1000	7.9	20	7.9	400	0.69	700
CT0805LSF-122_	1200	7.9	20	7.9	330	0.83	700
CT0805LSF-152_	1500	7.9	20	7.9	330	0.83	700
CT0805LSF-182_	1800	7.9	20	7.9	300	1.00	650
CT0805LSF-222_	2200	7.9	20	7.9	250	1.10	650
CT0805LSF-272_	2700	7.9	20	7.9	200	1.25	650
CT0805LSF-332_	3300	7.9	20	7.9	160	1.45	650
CT0805LSF-392_	3900	7.9	20	7.9	90	1.50	600
CT0805LSF-471_	4700	7.9	20	7.9	70	1.60	530
CT0805LSF-562_	5600	7.9	20	7.9	65	1.70	500
CT0805LSF-682_	6800	7.9	20	7.9	45	1.95	470
CT0805LSF-822_	8200	2.5	16	2.5	45	2.10	450
CT0805LSF-103_	10000	2.5	16	2.5	40	2.40	400
CT0805LSF-123_	12000	2.5	16	2.5	38	3.20	360
CT0805LSF-153_	15000	2.5	16	2.5	35	3.55	350
CT0805LSF-183_	18000	2.5	16	2.5	25	4.90	300
CT0805LSF-223_	22000	2.5	16	2.5	20	5.45	270
CT0805LSF-273_	27000	2.5	16	2.5	19	7.80	240
CT0805LSF-473_	47000	2.5	16	2.5	15	14.5	180

CHARACTERISTICS

Description: SMD ferrite core wire-wound chip inductor
Applications: LC resonant circuits such as oscillator and signal generators, impedance matching, curcuit isolation, RF filters, disk drives and computer peripherals, audio and video equipment, TV, radio and telecommunication equipment
Operating Temperature: -25°C to +85°C
Inductance Tolerance: ±5%, ±10%
Testing: Inductance and Q are tested on an HP4287A at specified frequency
Packaging: Tape & Reel
Miscellaneous: RoHS Compliant
Miscellaneous: Additional values available
Additional Information: Additional electrical & physical information available upon request
Samples available. See website for ordering information.

PHYSICAL DIMENSIONS

Size	A Max.	B Max.	C Max.	D Ref.	E	F	G
mm	2.29	1.60	1.52	0.70	1.02	0.50	1.27
inches	0.090	0.063	0.060	0.028	0.040	0.020	0.050

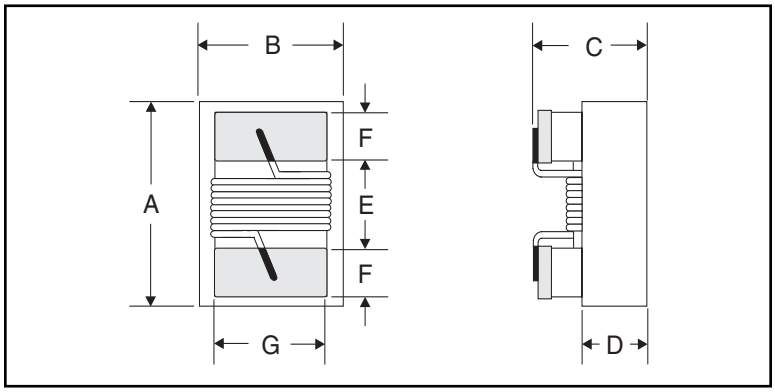

PAD LAYOUT

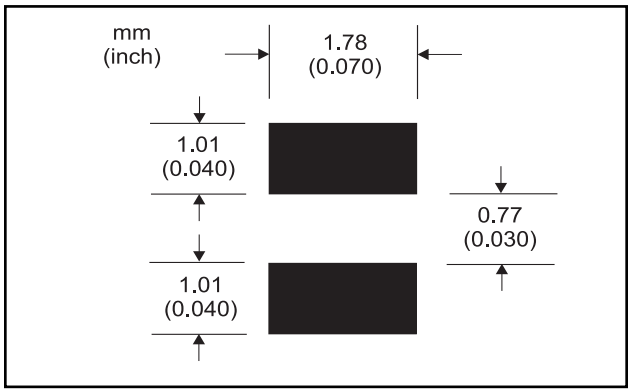

Copyright © 2017 by CT Magnetics, DBA Central Technologies. All rights reserved.
CT Magnetics reserves the right to make improvements or change specifications without notice