CTGS32F Series

From 1.0 µH to 1200 µH



CHARACTERISTICS

Description: SMD power inductor.
Applications: Power supplies for OA equipment, LCD televisions, PC notebooks, portable communication equipment, DC/DC converters.
Operating Temperature: -40°C to +105°C
Inductance Tolerance: ±10%, ±20%
Testing: Inductance is tested on an HP4285A at specified frequency.
Packaging: Tape & Reel.
Marking: Marked with inductance code.
Rated Current: Based on temp. rise & ΔL/L0A=10% Max.
Miscellaneous: RoHS Compliant.
Additional Information: Additional electrical & physical information available upon request.
Samples available. See website for ordering information.

PAD LAYOUT

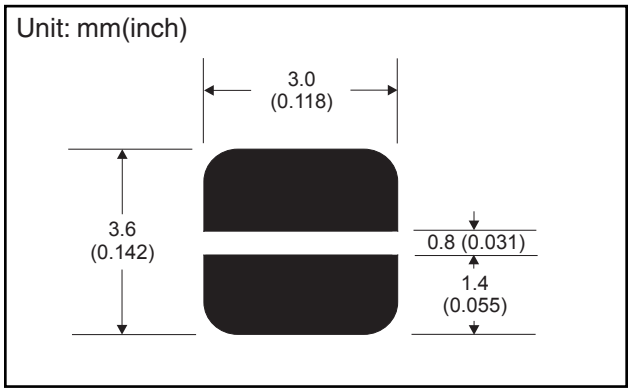

SPECIFICATIONS

Part numbers indicate available tolerance.
K= ±10%, M = ±20%

Part Number	Inductance @100kHz (µH)	Q Ref.	SRF Typ. (MHz)	RDC Max. (Ω)	Irms Max. ΔT=40°C (A)	Isat Typ. ΔL/L0A=10% (A)
CTGS32F-1R0M	1.0	20@7.96MHz	125	0.06	2.100	2.700
CTGS32F-1R2M	1.2	22@7.96MHz	100	0.07	2.000	2.500
CTGS32F-1R5M	1.5	23@7.96MHz	95	0.07	1.900	2.300
CTGS32F-1R8M	1.8	23@7.96MHz	85	0.08	1.800	2.000
CTGS32F-2R2M	2.2	22@7.96MHz	75	0.09	1.650	1.850
CTGS32F-2R7M	2.7	22@7.96MHz	72	0.10	1.500	1.700
CTGS32F-3R3M	3.3	23@7.96MHz	68	0.11	1.400	1.600
CTGS32F-3R9M	3.9	24@7.96MHz	50	0.12	1.300	1.500
CTGS32F-4R7M	4.7	18@7.96MHz	45	0.15	1.200	1.350
CTGS32F-5R6M	5.6	18@7.96MHz	42	0.16	1.100	1.300
CTGS32F-6R8M	6.8	18@7.96MHz	40	0.18	1.000	1.200
CTGS32F-8R2M	8.2	16@7.96MHz	35	0.20	0.900	1.050
CTGS32F-100M	10	18@2.52MHz	34	0.25	0.800	0.900
CTGS32F-120M	12	15@2.52MHz	33	0.28	0.750	0.850
CTGS32F-150M	15	20@2.52MHz	32	0.40	0.650	0.800
CTGS32F-180M	18	18@2.52MHz	28	0.46	0.580	0.750
CTGS32F-220M	22	23@2.52MHz	22	0.66	0.520	0.650
CTGS32F-270M	27	23@2.52MHz	20	0.75	0.480	0.550
CTGS32F-330K	33	20@2.52MHz	18	0.85	0.420	0.500
CTGS32F-390K	39	24@2.52MHz	18	1.12	0.380	0.450
CTGS32F-470K	47	23@2.52MHz	17	1.27	0.360	0.400
CTGS32F-560K	56	18@2.52MHz	16	1.45	0.340	0.350
CTGS32F-680K	68	24@2.52MHz	14	1.85	0.300	0.320
CTGS32F-820K	82	24@2.52MHz	12	2.10	0.280	0.300
CTGS32F-101K	100	40@0.796MHz	10	2.85	0.260	0.280
CTGS32F-121K	120	40@0.796MHz	10	3.20	0.220	0.250
CTGS32F-151K	150	38@0.796MHz	9.0	4.60	0.200	0.230
CTGS32F-181K	180	45@0.796MHz	8.5	5.00	0.185	0.210
CTGS32F-221K	220	40@0.796MHz	8.0	5.70	0.170	0.190
CTGS32F-271K	270	45@0.796MHz	7.0	8.60	0.150	0.170
CTGS32F-331K	330	40@0.796MHz	6.0	10.00	0.130	0.150
CTGS32F-391K	390	40@0.796MHz	5.5	10.80	0.120	0.140
CTGS32F-471K	470	42@0.796MHz	5.0	14.30	0.105	0.130
CTGS32F-561K	560	43@0.796MHz	4.8	16.00	0.095	0.120
CTGS32F-681K	680	43@0.796MHz	4.3	18.00	0.085	0.110
CTGS32F-821K	820	45@0.796MHz	4.0	22.50	0.080	0.100
CTGS32F-102K	1000	40@0.252MHz	3.2	26.00	0.070	0.090
CTGS32F-122K	1200	40@0.252MHz	3.0	30.00	0.060	0.080

PHYSICAL DIMENSIONS

Size	A	B	C	D Typ.
mm	3.0±0.3	2.8±0.3	2.5±0.3	0.9
inches	0.12±0.012	0.11±0.012	0.10±0.012	0.04

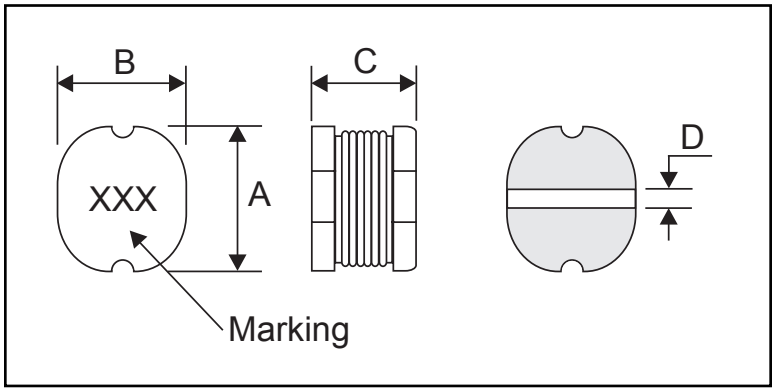

Copyright © 2019 by CT Magnetics, DBA Central Technologies. All rights reserved.
CT Magnetics reserves the right to make improvements or change specifications without notice