SIEMENS

Data sheet 3RH2431-1BG40

Contactor relay, latched, 3 NO + 1 NC, 125 V DC, Size S00, screw terminal



product brand name	SIRIUS
product designation	Auxiliary contactor
product type designation	3RH2
General technical data	
size of contactor	S00
product extension auxiliary switch	Yes
insulation voltage with degree of pollution 3 at AC rated value	690 V
degree of pollution	3
surge voltage resistance rated value	6 kV
shock resistance at rectangular impulse	
● at DC	10g / 5 ms, 5g / 10 ms
shock resistance with sine pulse	
● at DC	15g / 5 ms, 8g / 10 ms
mechanical service life (switching cycles)	
● of contactor typical	5 000 000
● of the contactor with added electronically optimized auxiliary switch block typical	5 000 000
● of the contactor with added auxiliary switch block typical	5 000 000
reference code according to IEC 81346-2	K
Substance Prohibitance (Date)	10/01/2009
Ambient conditions	
installation altitude at height above sea level maximum	2 000 m
ambient temperature	
● during operation	-25 ... +60 °C
● during storage	-55 ... +80 °C
relative humidity minimum	10 %
relative humidity at 55 °C according to IEC 60068-2-30 maximum	95 %
Main circuit	
no-load switching frequency	
● at AC	10 000 1/h
● at DC	10 000 1/h
Control circuit/ Control	
type of voltage of the control supply voltage	DC
control supply voltage at DC	
● rated value	125 V
operating range factor control supply voltage rated value of magnet coil at DC	

Subject to change without notice
© Copyright Siemens

● initial value	0.8
● full-scale value	1.1
closing power of magnet coil at DC	4 W
holding power of magnet coil at DC	4 W
closing delay	
● at DC	30 ... 100 ms
opening delay	
● at DC	7 ... 13 ms
arcing time	10 ... 15 ms
Auxiliary circuit	
number of NC contacts for auxiliary contacts	1
● instantaneous contact	1
number of NO contacts for auxiliary contacts	3
● instantaneous contact	3
identification number and letter for switching elements	31 E
operational current at AC-12 maximum	10 A
operational current at AC-15	
● at 230 V rated value	10 A
● at 400 V rated value	3 A
● at 500 V rated value	2 A
● at 690 V rated value	1 A
operational current at 1 current path at DC-12	
● at 24 V rated value	10 A
● at 110 V rated value	3 A
● at 220 V rated value	1 A
● at 440 V rated value	0.3 A
● at 600 V rated value	0.15 A
operational current with 2 current paths in series at DC-12	
● at 24 V rated value	10 A
● at 60 V rated value	10 A
● at 110 V rated value	4 A
● at 220 V rated value	2 A
● at 440 V rated value	1.3 A
● at 600 V rated value	0.65 A
operational current with 3 current paths in series at DC-12	
● at 24 V rated value	10 A
● at 60 V rated value	10 A
● at 110 V rated value	10 A
● at 220 V rated value	3.6 A
● at 440 V rated value	2.5 A
● at 600 V rated value	1.8 A
operating frequency at DC-12 maximum	1 000 1/h
operational current at 1 current path at DC-13	
● at 24 V rated value	10 A
● at 110 V rated value	1 A
● at 220 V rated value	0.3 A
● at 440 V rated value	0.14 A
● at 600 V rated value	0.1 A
operational current with 2 current paths in series at DC-13	
● at 24 V rated value	10 A
● at 60 V rated value	3.5 A
● at 110 V rated value	1.3 A
● at 220 V rated value	0.9 A
● at 440 V rated value	0.2 A
● at 600 V rated value	0.1 A
operational current with 3 current paths in series at DC-13	

© Copyright Siemens

● at 24 V rated value	10 A
● at 60 V rated value	4.7 A
● at 110 V rated value	3 A
● at 220 V rated value	1.2 A
● at 440 V rated value	0.5 A
● at 600 V rated value	0.26 A
operating frequency at DC-13 maximum	1 000 1/h
design of the miniature circuit breaker for short-circuit protection of the auxiliary circuit up to 230 V	C characteristic: 6 A; 0.4 kA
contact reliability of auxiliary contacts	1 faulty switching per 100 million (17 V, 1 mA)
UL/CSA ratings	
contact rating of auxiliary contacts according to UL	A600 / Q600
Short-circuit protection	
design of the fuse link for short-circuit protection of the auxiliary switch required	fuse gL/gG: 10 A
Installation/ mounting/ dimensions	
mounting position	+/-180° rotation possible on vertical mounting surface; can be tilted forward and backward by +/- 22.5° on vertical mounting surface
fastening method	screw and snap-on mounting onto 35 mm standard mounting rail
height	57.5 mm
width	90 mm
depth	73 mm
required spacing	
● with side-by-side mounting	
— forwards	10 mm
— upwards	10 mm
— downwards	10 mm
— at the side	0 mm
● for grounded parts	
— forwards	10 mm
— upwards	10 mm
— at the side	6 mm
— downwards	10 mm
● for live parts	
— forwards	10 mm
— upwards	10 mm
— downwards	10 mm
— at the side	6 mm
Connections/ Terminals	
type of electrical connection for auxiliary and control circuit	screw-type terminals
type of connectable conductor cross-sections	
● for auxiliary contacts	
— solid or stranded	2x (0.5 ... 1.5 mm²), 2x (0.75 ... 2.5 mm²), 2x 4 mm²
— finely stranded with core end processing	2x (0.5 ... 1.5 mm²), 2x (0.75 ... 2.5 mm²)
● at AWG cables for auxiliary contacts	2x (20 ... 16), 2x (18 ... 14), 2x 12
Safety related data	
B10 value with high demand rate according to SN 31920	1 000 000; With 0.3 x Ie
proportion of dangerous failures	
● with low demand rate according to SN 31920	40 %
● with high demand rate according to SN 31920	73 %
failure rate [FIT] with low demand rate according to SN 31920	100 FIT
T1 value for proof test interval or service life according to IEC 61508	20 y
protection class IP on the front according to IEC 60529	IP20
touch protection on the front according to IEC 60529	finger-safe, for vertical contact from the front
Certificates/ approvals	
General Product Approval	

Subject to change without notice
© Copyright Siemens

CSA	Confirmation	CCC	UL	KC	EAC

EMC	Functional Safety/Safety of Machinery	Declaration of Conformity		Test Certificates	
RCM	Type Examination Certificate	CE EG-Konf.	UKCA	Special Test Certific-ate	Type Test Certific-ates/Test Report

Marine / Shipping					
ABS	BUREAU VERITAS	DNV	Lloyd's Register LRS	PRS	RINA

Marine / Shipping	other		Railway	Dangerous Good
RMRS	Confirmation	VDE	Vibration and Shock	Transport Informa-tion

Further information

Information- and Downloadcenter (Catalogs, Brochures,…)
https://www.siemens.com/ic10
Industry Mall (Online ordering system)
https://mall.industry.siemens.com/mall/en/en/Catalog/product?mlfb=3RH2431-1BG40
Cax online generator
http://support.automation.siemens.com/WW/CAXorder/default.aspx?lang=en&mlfb=3RH2431-1BG40
Service&Support (Manuals, Certificates, Characteristics, FAQs,...)
https://support.industry.siemens.com/cs/ww/en/ps/3RH2431-1BG40
Image database (product images, 2D dimension drawings, 3D models, device circuit diagrams, EPLAN macros, ...)
http://www.automation.siemens.com/bilddb/cax_de.aspx?mlfb=3RH2431-1BG40&lang=en
Characteristic: Tripping characteristics, I²t, Let-through current
https://support.industry.siemens.com/cs/ww/en/ps/3RH2431-1BG40/char
Further characteristics (e.g. electrical endurance, switching frequency)
http://www.automation.siemens.com/bilddb/index.aspx?view=Search&mlfb=3RH2431-1BG40&objecttype=14&gridview=view1

Subject to change without notice
© Copyright Siemens

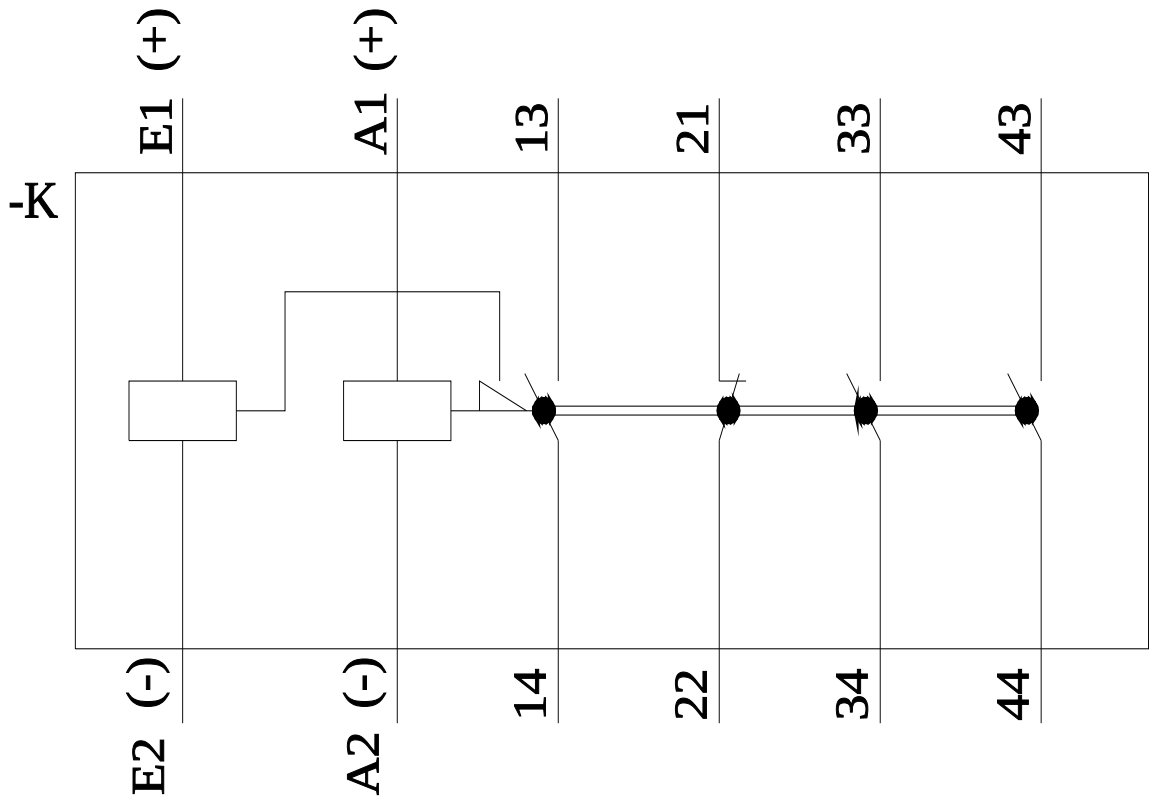

last modified: 12/1/2021

Subject to change without notice
© Copyright Siemens