Pomona ELECTRONICS

Technical Data Sheet

Model 3276 & 4513

Miniature Banana Plug with Threaded Stud



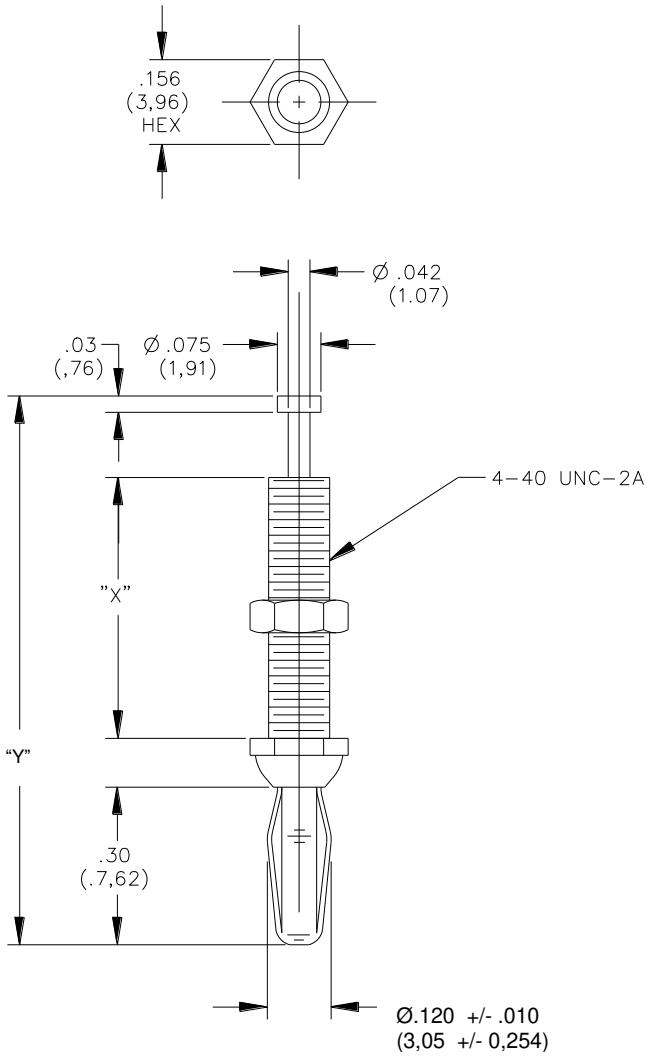

Model	"X" Dimension	"Y" Dimension
3276	.23" (5,8mm)	0.75" (19,05mm)
4513	.48" (12,2mm)	1.00" (25,40mm)

Minimum Panel Thickness is 0.030" (0.76mm)

Features

- Threaded stud enables fast and easy mounting to panels.
- Solder turret allows wire attachment.
- Miniature banana plug features gold plated Beryllium Copper for long insertion life and low contact resistance.

Materials

Miniature Banana Plug:
Spring: Beryllium Copper, Gold Plated
Body: Brass, Gold Plated
Hex Nut: 4-40 Nut, Stainless Steel

Ratings

Operating Voltage: 2500 VDC
Current: 5 Amperes Max.

Ordering Information

Model 3276
Model 4513
Parts are packaged ten per bag, unassembled.

USA: Technical Support: technicalsupport@pomonatest.com

Europe: 31-(0) 40 2675 150 **International:** 425-446-5500

Where to Buy: www.pomonaelectronics.com

All dimensions are in inches. Tolerances (except noted): .xx = ±.02" (,51 mm), .xxx = ± .005" (,127 mm). All specifications are to the latest revisions. Specifications are subject to change without notice. Registered trademarks are the property of their respective companies.

Copyright © 2023