DACx3401 10-Bit and 8-Bit, Voltage-Output Digital-to-Analog Converters With Nonvolatile Memory and PMBus™ Compatible I²C Interface in Tiny 2 × 2 WSON

1 Features

- 1 LSB INL and DNL (10-bit and 8-bit)
- Wide operating range
  - Power supply: 1.8 V to 5.5 V
  - Temperature range: –40˚C to +125˚C
- PMBus™ compatible I²C interface
  - Standard, Fast, and Fast+ modes
  - Digital slew rate control
  - 1.62-V V_{IH} with V_{DD} = 5.5 V
- User-programmable nonvolatile memory (NVM/EEPROM)
  - Save and recall all register settings
- Programmable waveform generation: Square, ramp, and sawtooth
- Preprogrammed medical-alarm tone-generation mode: low, medium, and high priority alarms
- Internal reference
- Very low power: 0.2 mA at 1.8 V
- Flexible startup: High impedance or 10K-GND
- Tiny package: 8-pin WSON (2 mm × 2 mm)

2 Applications

- Rack server
- Exit and emergency lighting
- Automotive USB charge
- Barcode scanner
- Active antenna system mMIMO (AAS)
- CPU (PLC controller)

3 Description

The 10-bit DAC53401 and 8-bit DAC43401 (DACx3401) are a pin-compatible family of buffered voltage-output digital-to-analog converters (DACs). These devices consume very low power, and are available in a tiny 8-pin WSON package. The feature set combined with the tiny package and low power make the DACx3401 an excellent choice for applications such as LED and general-purpose bias point generation, power supply control, digitizers, PWM signal generation, and medical alarm tone generation.

These devices have nonvolatile memory (NVM), an internal reference, and a PMBus-compatible I²C interface. The DACx3401 operates with either an internal reference or the power supply as a reference, and provides full-scale output of 1.8 V to 5.5 V. The devices communicate through the I²C interface. These devices support I²C standard mode, fast mode, and fast+ mode.

The DACx3401 are feature rich, and include PMBus voltage margin commands, user-programmable power up to high impedance, standalone waveform generator, medical alarm tone generator, dedicated feedback pin, and more.

The DACx3401 operate within the temperature range of –40°C to +125°C.

Device Information(1)

PART NUMBER	PACKAGE	BODY SIZE (NOM)
DAC53401	WSON (8)	2.00 mm × 2.00 mm
DAC43401		

(1) For all available packages, refer to the package option addendum at the end of the data sheet.

Functional Block Diagram

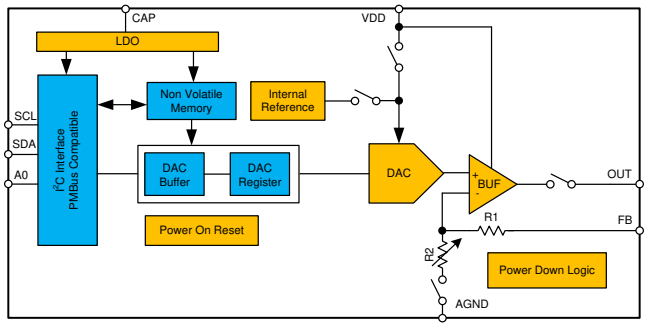

Power-Supply Control With the DACx3401

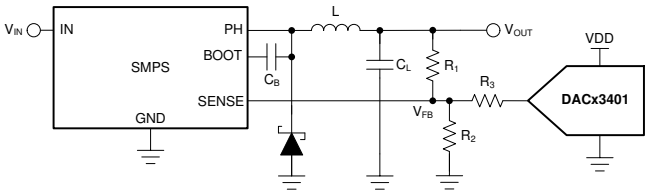

An IMPORTANT NOTICE at the end of this data sheet addresses availability, warranty, changes, use in safety-critical applications, intellectual property matters and other important disclaimers. PRODUCTION DATA.

Table of Contents

1 Features ... 1
2 Applications ... 1
3 Description ... 1
4 Revision History ... 2
5 Device Comparison Table ... 3
6 Pin Configuration and Functions ... 3
7 Specifications ... 4
7.1 Absolute Maximum Ratings ... 4
7.2 ESD Ratings ... 4
7.3 Recommended Operating Conditions ... 4
7.4 Thermal Information ... 4
7.5 Electrical Characteristics ... 5
7.6 Timing Requirements: I^2C^{TM} Standard mode ... 7
7.7 Timing Requirements: I^2C^{TM} Fast mode ... 7
7.8 Timing Requirements: I^2C^{TM} Fast+ mode ... 8
7.9 Typical Characteristics: V_{DD} = 1.8 V (Reference = V_{DD}) or V_{DD} = 2 V (Internal Reference) ... 9
7.10 Typical Characteristics: V_{DD} = 5.5 V (Reference = V_{DD}) or V_{DD} = 5 V (Internal Reference) ... 11
7.11 Typical Characteristics ... 13
8 Detailed Description ... 18
8.1 Overview ... 18
8.2 Functional Block Diagram ... 18
8.3 Feature Description ... 19
8.4 Device Functional Modes ... 25
8.5 Programming ... 28
8.6 Register Map ... 32
9 Application and Implementation ... 40
9.1 Application Information ... 40
9.2 Typical Applications ... 40
10 Power Supply Recommendations ... 46
11 Layout ... 46
11.1 Layout Guidelines ... 46
11.2 Layout Example ... 46
12 Device and Documentation Support ... 47
12.1 Documentation Support ... 47
12.2 Related Links ... 47
12.3 Receiving Notification of Documentation Updates 47
12.4 Support Resources ... 47
12.5 Trademarks ... 47
12.6 Electrostatic Discharge Caution ... 47
12.7 Glossary ... 47
13 Mechanical, Packaging, and Orderable Information ... 47

4 Revision History

Changes from Original (July 2019) to Revision A	Page
• Changed DAC53401 and DAC43401 devices from advanced information (preview) to production data (active)	1

Copyright © 2019, Texas Instruments Incorporated

5 Device Comparison Table

DEVICE	RESOLUTION
DAC53401	10-bit
DAC43401	8-bit

6 Pin Configuration and Functions

DSG Package
8-Pin WSON
Top View

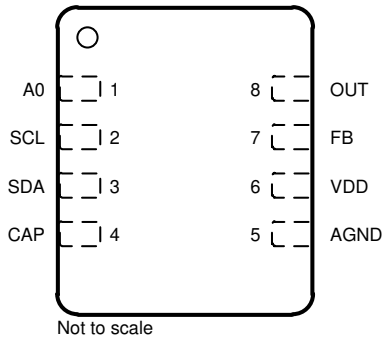

Pin Functions

PIN		TYPE	DESCRIPTION
NAME	NO.		
A0	1	Input	Four-state address input
AGND	5	Ground	Ground reference point for all circuitry on the device
CAP	4	Input	External capacitor for the internal LDO. Connect a capacitor (0.5 µF to 15 µF) between CAP and AGND.
FB	7	Input	Voltage feedback pin
OUT	8	Output	Analog output voltage from DAC
SCL	2	Input	Serial interface clock. This pin must be connected to the supply voltage with an external pullup resistor.
SDA	3	Input/output	Data are clocked into or out of the input register. This pin is a bidirectional, and must be connected to the supply voltage with an external pullup resistor.
VDD	6	Power	Analog supply voltage: 1.8 V to 5.5 V

Copyright © 2019, Texas Instruments Incorporated

7 Specifications

7.1 Absolute Maximum Ratings

over operating free-air temperature range (unless otherwise noted)[1]

		MIN	MAX	UNIT
V_{DD}	Supply voltage, V_{DD} to A_{GND}	–0.3	6	V
	Digital input(s) to A_{GND}	–0.3	V_{DD} + 0.3	V
	CAP to A_{GND}	–0.3	1.65	V
	V_{FB} to A_{GND}	–0.3	V_{DD} + 0.3	
	V_{OUT} to A_{GND}	–0.3	V_{DD} + 0.3	
	Current into any pin	–10	10	mA
T_J	Junction temperature	–40	150	°C
T_{stg}	Storage temperature	–65	150	

(1) Stresses beyond those listed under *Absolute Maximum Rating* may cause permanent damage to the device. These are stress ratings only, which do not imply functional operation of the device at these or any other conditions beyond those indicated under *Recommended Operating Condition*. Exposure to absolute-maximum-rated conditions for extended periods may affect device reliability.

7.2 ESD Ratings

			VALUE	UNIT
$V_{(ESD)}$	Electrostatic discharge	Human body model (HBM), per ANSI/ESDA/JEDEC JS-001, all pins[1]	±2000	V
		Charged device model (CDM), per JEDEC specification JESD22-C101, pins 1, 4, 5, 8[2]	±750	
		Charged device model (CDM), per JEDEC specification JESD22-C101, pins 2, 3, 6, 7[2]	±500	

(1) JEDEC document JEP155 states that 500-V HBM allows safe manufacturing with a standard ESD control process.
(2) JEDEC document JEP157 states that 250-V CDM allows safe manufacturing with a standard ESD control process.

7.3 Recommended Operating Conditions

over operating free-air temperature range (unless otherwise noted)

		MIN	NOM	MAX	UNIT
V_{DD}	Positive supply voltage to ground (A_{GND})	1.71		5.5	V
V_{IH}	Digital input high voltage, 1.7 V < V_{DD} ≤ 5.5 V	1.62			V
V_{IL}	Digital input low voltage			0.4	V
T_A	Ambient temperature	–40		125	°C

7.4 Thermal Information

THERMAL METRIC[1]		DACx3401 DSG (WSON) 8 PINS	UNIT
$R_{\theta JA}$	Junction-to-ambient thermal resistance	49	°C/W
$R_{\theta JC(top)}$	Junction-to-case (top) thermal resistance	50	°C/W
$R_{\theta JB}$	Junction-to-board thermal resistance	24.1	°C/W
Ψ_{JT}	Junction-to-top characterization parameter	1.1	°C/W
Ψ_{JB}	Junction-to-board characterization parameter	24.1	°C/W
$R_{\theta JC(bot)}$	Junction-to-case (bottom) thermal resistance	8.7	°C/W

(1) For more information about traditional and new thermal metrics, see the *Semiconductor and IC Package Thermal Metrics application report.*

Copyright © 2019, Texas Instruments Incorporated

7.5 Electrical Characteristics

all minimum/maximum specifications at T_A = –40°C to +125°C and typical specifications at T_A = 25°C, 1.8 V ≤ V_{DD} ≤ 5.5 V, DAC reference tied to VDD, gain = 1x, DAC output pin (OUT) loaded with resistive load (R_L = 5 kΩ to AGND) and capacitive load (C_L = 200 pF to AGND), and digital inputs at VDD or AGND (unless otherwise noted)

PARAMETER		TEST CONDITIONS	MIN	TYP	MAX	UNIT
STATIC PERFORMANCE						
	Resolution	DAC53401	10			Bits
		DAC43401	8			
INL	Relative accuracy (1)		–1		1	LSB
DNL	Differential nonlinearity (1)		–1		1	LSB
	Zero code error	Code 0d into DAC		6	12	mV
		Internal V_{REF}, gain = 4x, V_{DD} = 5.5 V		6	15	
	Zero code error temperature coefficient			±10		µV/°C
	Offset error (1)		–0.5	0.25	0.5	%FSR
	Offset error temperature coefficient (1)			±0.0003		%FSR/°C
	Gain error (1)		–0.5	0.25	0.5	%FSR
	Gain error temperature coefficient (1)			±0.0008		%FSR/°C
	Full scale error	1.8 V ≤ V_{DD} < 2.7 V, code 1023d into DAC, no headroom	–1	0.5	1	%FSR
		2.7 V ≤ V_{DD} ≤ 5.5 V, code 1023d into DAC, no headroom	–0.5	0.25	0.5	
	Full scale error temperature coefficient			±0.0008		%FSR/°C
OUTPUT CHARACTERISTICS						
	Output voltage	Reference tied to V_{DD}	0		5.5	V
C_L	Capacitive load (2)	R_L = Infinite, phase margin = 30°			1	nF
		R_L = 5 kΩ, phase margin = 30°			2	
	Load regulation	DAC at midscale, –10 mA ≤ I_{OUT} ≤ 10 mA, V_{DD} = 5.5 V		0.4		mV/mA
	Short circuit current	V_{DD} = 1.8 V, full-scale output shorted to A_{GND} or zero-scale output shorted to V_{DD}		10		mA
		V_{DD} = 2.7 V, full-scale output shorted to A_{GND} or zero-scale output shorted to V_{DD}		25		
		V_{DD} = 5.5 V, full-scale output shorted to A_{GND} or zero-scale output shorted to V_{DD}		50		
	Output voltage headroom (1)	To V_{DD} (DAC output unloaded, internal reference = 1.21 V), V_{DD} ≥ 1.21 × gain + 0.2 V		0.2		V
		To V_{DD} (DAC output unloaded, reference tied to V_{DD})		0.8		%FSR
		To V_{DD} (I_{LOAD} = 10 mA at V_{DD} = 5.5 V, I_{LOAD} = 3 mA at V_{DD} = 2.7 V, I_{LOAD} = 1 mA at V_{DD} = 1.8 V), DAC code = full scale	10			
	V_{OUT} dc output impedance	DAC output enabled and DAC code = midscale		0.25		Ω
		DAC output enabled and DAC code = 4d		0.25		
		DAC output enabled and DAC code = 1016d		0.26		

(1) Measured with DAC output unloaded. For external reference between end-point codes: 8d to 1016d for 10-bit resolution, 2d to 254d for 8-bit resolution. For internal reference V_{DD} ≥ 1.21 x gain + 0.2 V, between end-point codes: 8d to 1016d for 10-bit resolution, 2d to 254d for 8-bit resolution.
(2) Specified by design and characterization, not production tested.

Copyright © 2019, Texas Instruments Incorporated

Electrical Characteristics (continued)

all minimum/maximum specifications at T_A = –40°C to +125°C and typical specifications at T_A = 25°C, 1.8 V ≤ V_{DD} ≤ 5.5 V, DAC reference tied to VDD, gain = 1x, DAC output pin (OUT) loaded with resistive load (R_L = 5 kΩ to AGND) and capacitive load (C_L = 200 pF to AGND), and digital inputs at VDD or AGND (unless otherwise noted)

PARAMETER		TEST CONDITIONS	MIN	TYP	MAX	UNIT
Z_O	V_{FB} dc output impedance (3)	DAC output enabled, DAC reference tied to VDD (gain = 1x) or internal reference (gain = 1.5x or 2x)	160	200	240	kΩ
		DAC output enabled, internal V_{REF}, gain = 3x or 4x	192	240	288	
	V_{OUT} + V_{FB} dc output leakage (2)	At startup, measured when DAC output is disabled and held at V_{DD} / 2 for V_{DD} = 5.5 V			5	nA
	Power supply rejection ratio (dc)	Internal V_{REF}, gain = 2x, DAC at midscale; V_{DD} = 5 V ±10%		0.25		mV/V
DYNAMIC PERFORMANCE						
t_{sett}	Output voltage settling time	1/4 to 3/4 scale and 3/4 to 1/4 scale settling to 10%FSR, V_{DD} = 5.5 V		8		µs
		1/4 to 3/4 scale and 3/4 to 1/4 scale settling to 10%FSR, V_{DD} = 5.5 V, internal V_{REF}, gain = 4x		12		
	Slew rate	V_{DD} = 5.5 V		1		V/µs
	Power on glitch magnitude	At startup (DAC output disabled), R_L = 5 kΩ, C_L = 200 pF		75		mV
		At startup (DAC output disabled), R_L = 100 kΩ		200		
	Output enable glitch magnitude	DAC output disabled to enabled (DAC registers at zero scale, R_L = 100 kΩ		250		mV
V_n	Output noise voltage (peak to peak)	0.1 Hz to 10 Hz, DAC at midscale, V_{DD} = 5.5 V		34		$µV_{PP}$
		Internal V_{REF}, gain = 4x, 0.1 Hz to 10 Hz, DAC at midscale, V_{DD} = 5.5 V		70		
	Output noise density	Measured at 1 kHz, DAC at midscale, V_{DD} = 5.5 V		0.2		µV/√Hz
		Internal $V_{REF,}$ gain = 4x,, measured at 1 kHz, DAC at midscale, V_{DD} = 5.5 V		0.7		
	Power supply rejection ratio (ac) (3)	Internal V_{REF}, gain = 4x, 200-mV 50 or 60 Hz sine wave superimposed on power supply voltage, DAC at midscale		–71		dB
	Code change glitch impulse	±1 LSB change around mid code (including feedthrough)		10		nV-s
	Code change glitch impulse magnitude	±1 LSB change around mid code (including feedthrough)		15		mV
EEPROM						
	Endurance	–40°C ≤ T_A ≤ 85°C		20000		Cycles
				1000		
	Data retention (2)	T_A = 25°C		50		Years
	EEPROM programming write cycle time (2)		5	10	15	ms
DIGITAL INPUTS						
	Digital feedthrough	DAC output static at midscale, fast+ mode, SCL toggling		20		nV-s
	Pin capacitance	Per pin		10		pF
POWER						
	Load capacitor - CAP pin (2)		0.5		15	µF
I_{DD}	Current flowing into VDD	Normal mode, DACs at full scale, digital pins static		0.5	0.8	mA
		DAC power-down, internal reference power down		80		µA

(3) Specified with 200-mV headroom with respect to reference value when internal reference is used.

Copyright © 2019, Texas Instruments Incorporated

7.6 Timing Requirements: I²C™ Standard mode

all input signals are timed from VIL to 70% of V_{DD}, 1.8 V ≤ V_{DD} ≤ 5.5 V, –40°C ≤ T_A ≤ +125°C, 1.8 V ≤ $V_{pull-up}$ ≤ V_{DD} V

		MIN	NOM	MAX	UNIT
f_{SCLK}	SCL frequency			0.1	MHz
t_{BUF}	Bus free time between stop and start conditions	4.7			µs
t_{HDSTA}	Hold time after repeated start	4			µs
t_{SUSTA}	Repeated start setup time	4.7			µs
t_{SUSTO}	Stop condition setup time	4			µs
t_{HDDAT}	Data hold time	0			ns
t_{SUDAT}	Data setup time	250			ns
t_{LOW}	SCL clock low period	4700			ns
t_{HIGH}	SCL clock high period	4000			ns
t_F	Clock and data fall time			300	ns
t_R	Clock and data rise time			1000	ns

7.7 Timing Requirements: I²C™ Fast mode

all input signals are timed from VIL to 70% of V_{DD}, 1.8 V ≤ V_{DD} ≤ 5.5 V, –40°C ≤ T_A ≤ +125°C, 1.8 V ≤ $V_{pull-up}$ ≤ V_{DD} V

		MIN	NOM	MAX	UNIT
f_{SCLK}	SCL frequency			0.4	MHz
t_{BUF}	Bus free time between stop and start conditions	1.3			µs
t_{HDSTA}	Hold time after repeated start	0.6			µs
t_{SUSTA}	Repeated start setup time	0.6			µs
t_{SUSTO}	Stop condition setup time	0.6			µs
t_{HDDAT}	Data hold time	0			ns
t_{SUDAT}	Data setup time	100			ns
t_{LOW}	SCL clock low period	1300			ns
t_{HIGH}	SCL clock high period	600			ns
t_F	Clock and data fall time			300	ns
t_R	Clock and data rise time			300	ns

Copyright © 2019, Texas Instruments Incorporated

7.8 Timing Requirements: I²C™ Fast+ mode

all input signals are timed from VIL to 70% of V_{DD}, 1.8 V ≤ V_{DD} ≤ 5.5 V, –40°C ≤ T_A ≤ +125°C, 1.8 V ≤ $V_{pull-up}$ ≤ V_{DD} V

		MIN	NOM	MAX	UNIT
f_{SCLK}	SCL frequency			1	MHz
t_{BUF}	Bus free time between stop and start conditions	0.5			µs
t_{HDSTA}	Hold time after repeated start	0.26			µs
t_{SUSTA}	Repeated start setup time	0.26			µs
t_{SUSTO}	Stop condition setup time	0.26			µs
t_{HDDAT}	Data hold time	0			ns
t_{SUDAT}	Data setup time	50			ns
t_{LOW}	SCL clock low period	0.5			µs
t_{HIGH}	SCL clock high period	0.26			µs
t_F	Clock and data fall time			120	ns
t_R	Clock and data rise time			120	ns

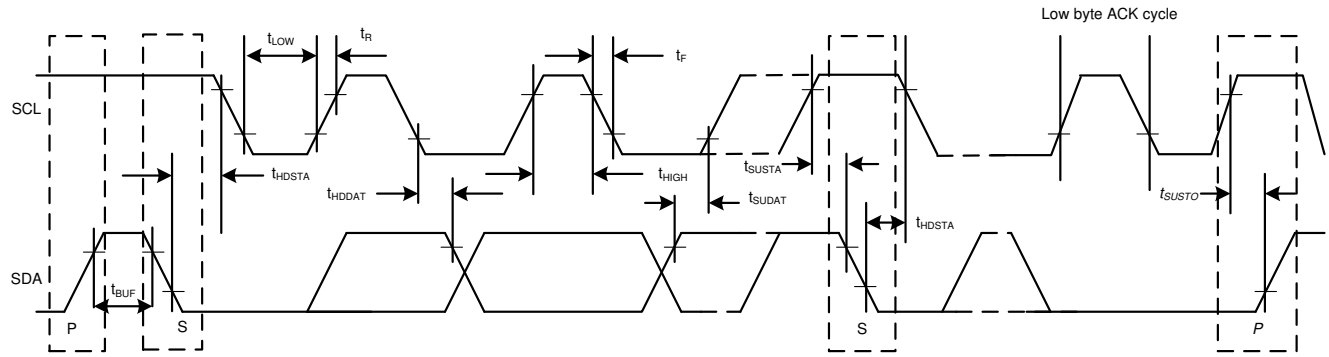

Figure 1. Timing Diagram

Copyright © 2019, Texas Instruments Incorporated

7.9 Typical Characteristics: V_{DD} = 1.8 V (Reference = V_{DD}) or V_{DD} = 2 V (Internal Reference)

at T_A = 25°C, 10-bit DAC, and DAC outputs unloaded (unless otherwise noted)

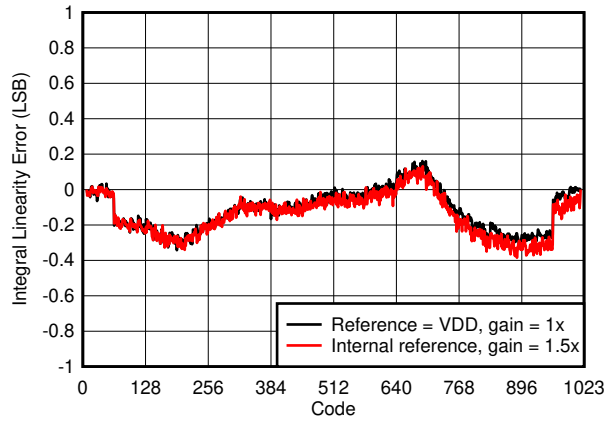

Figure 2. Integral Linearity Error vs Digital Input Code

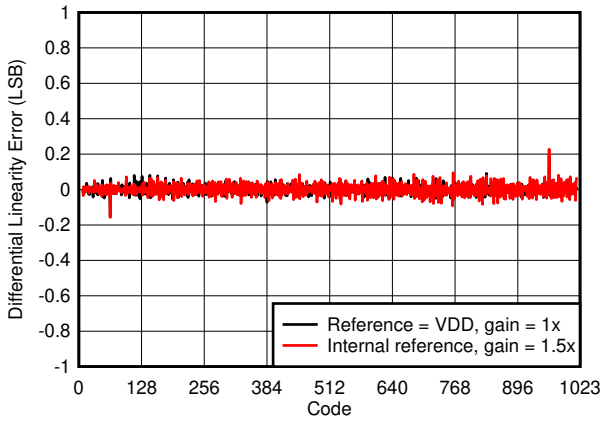

Figure 3. Differential Linearity Error vs Digital Input Code

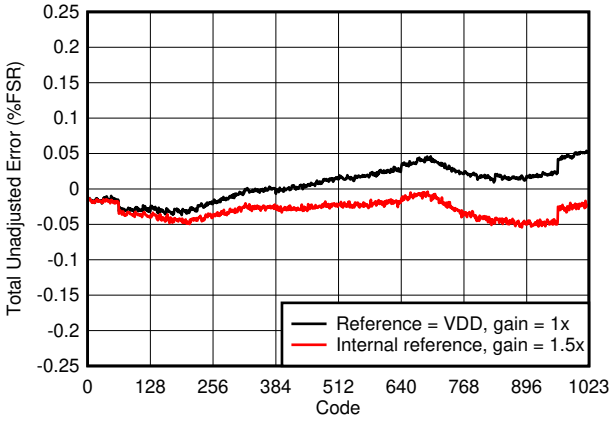

Figure 4. Total Unadjusted Error vs Digital Input Code

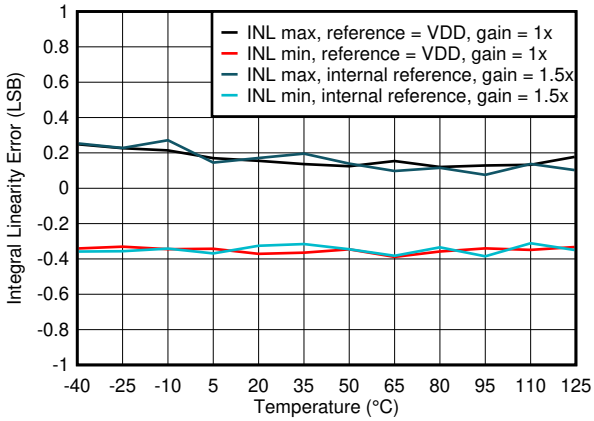

Figure 5. Integral Linearity Error vs Temperature

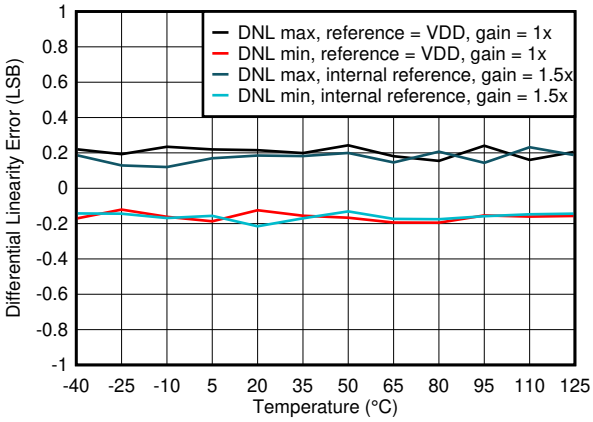

Figure 6. Differential Linearity Error vs Temperature

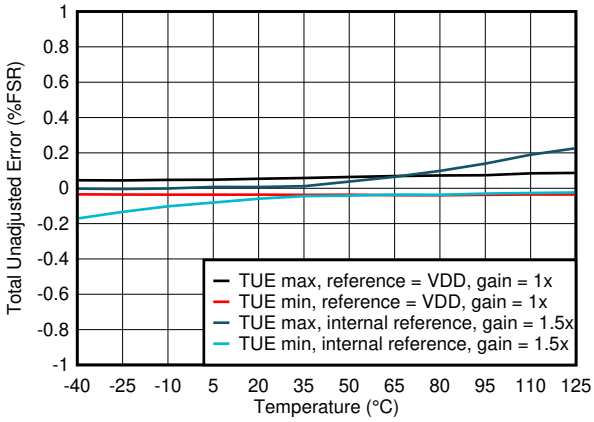

Figure 7. Total Unadjusted Error vs Temperature

Typical Characteristics: V_{DD} = 1.8 V (Reference = V_{DD}) or V_{DD} = 2 V (Internal Reference) (continued)

at T_A = 25°C, 10-bit DAC, and DAC outputs unloaded (unless otherwise noted)

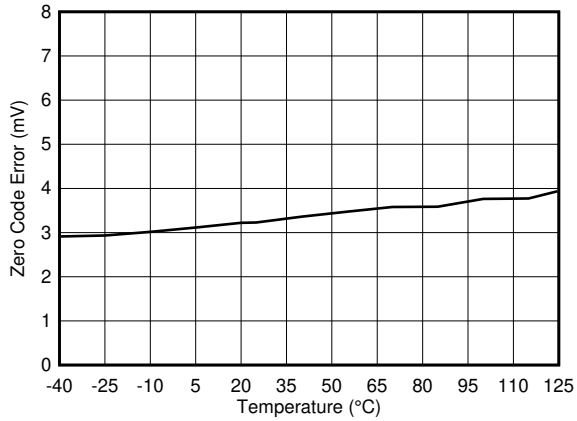

Reference = V_{DD}

Figure 8. Zero Code Error vs Temperature

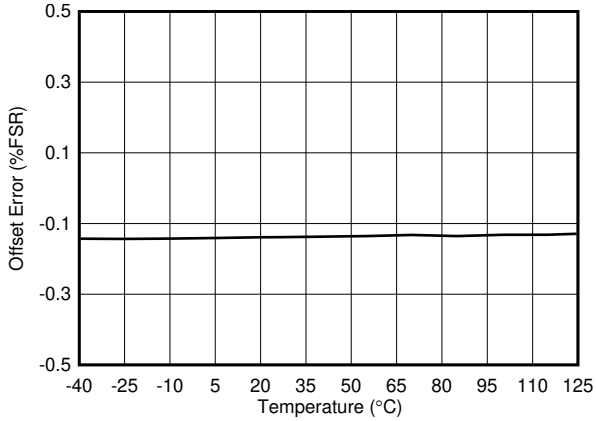

Reference = V_{DD}

Figure 9. Offset Error vs Temperature

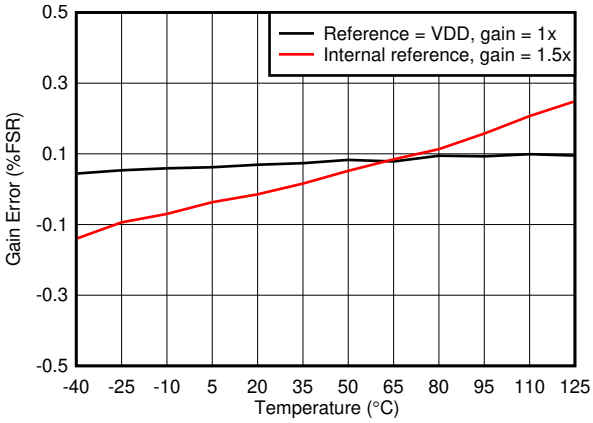

Figure 10. Gain Error vs Temperature

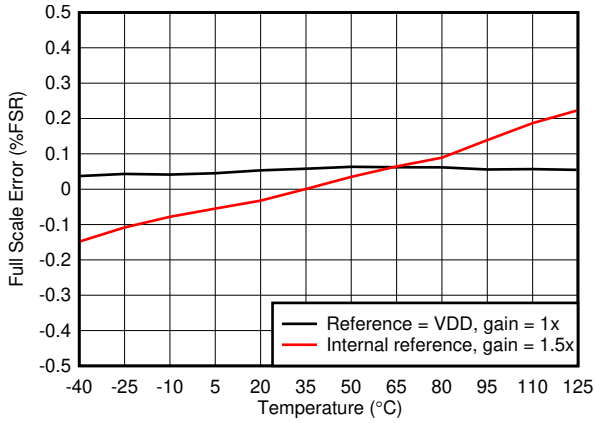

Figure 11. Full-Scale Error vs Temperature

Copyright © 2019, Texas Instruments Incorporated

7.10 Typical Characteristics: V_{DD} = 5.5 V (Reference = V_{DD}) or V_{DD} = 5 V (Internal Reference)

at T_A = 25°C, 10-bit DAC, and DAC outputs unloaded (unless otherwise noted)

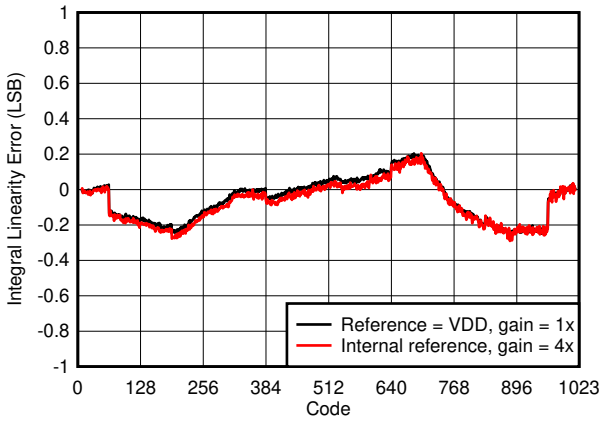

Figure 12. Integral Linearity Error vs Digital Input Code

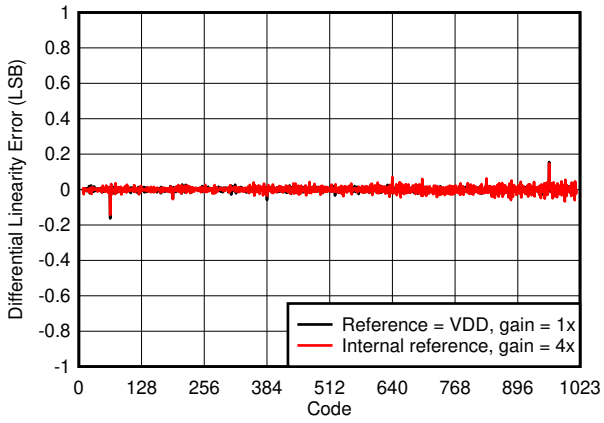

Figure 13. Differential Linearity Error vs Digital Input Code

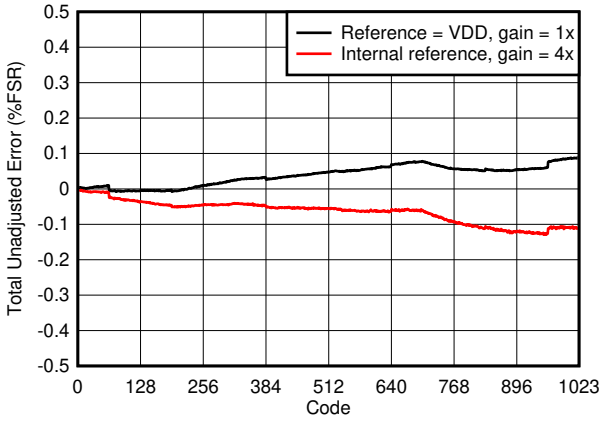

Figure 14. Total Unadjusted Error vs Digital Input Code

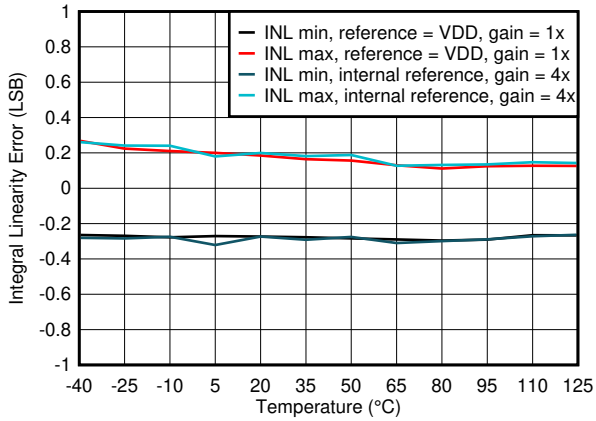

Figure 15. Integral Linearity Error vs Temperature

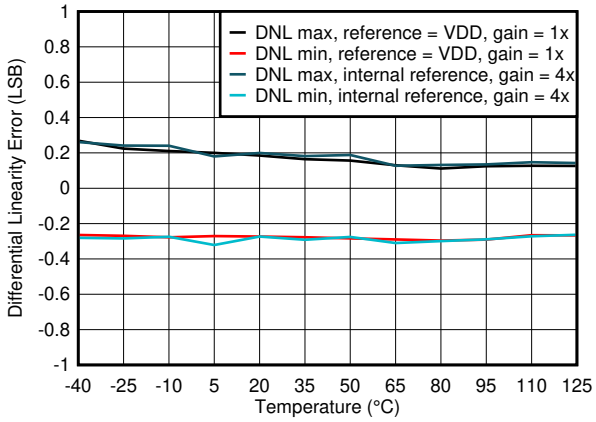

Figure 16. Differential Linearity Error vs Temperature

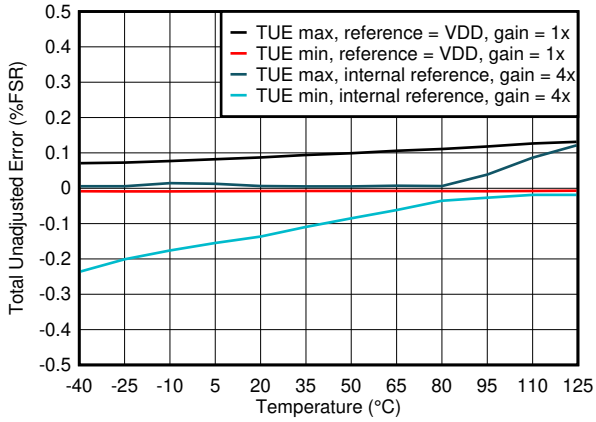

Figure 17. Total Unadjusted Error vs Temperature

Typical Characteristics: V_{DD} = 5.5 V (Reference = V_{DD}) or V_{DD} = 5 V (Internal Reference) (continued)

at T_A = 25°C, 10-bit DAC, and DAC outputs unloaded (unless otherwise noted)

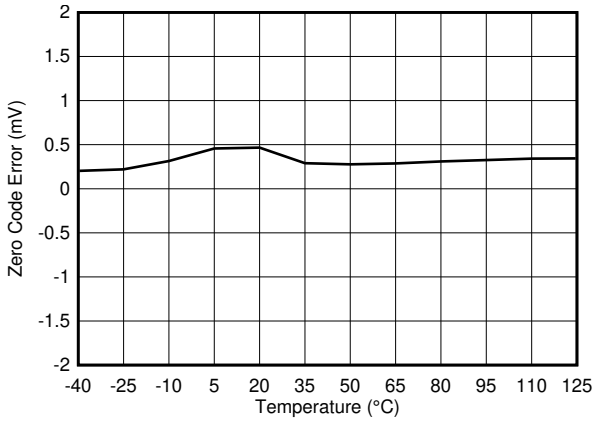

Reference = V_{DD}

Figure 18. Zero Code Error vs Temperature

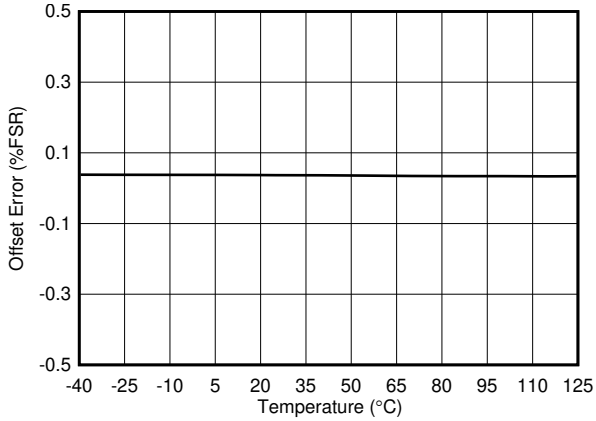

Reference = V_{DD}

Figure 19. Offset Error vs Temperature

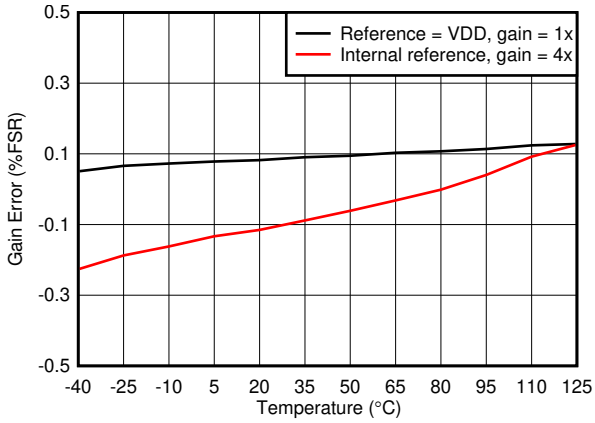

Figure 20. Gain Error vs Temperature

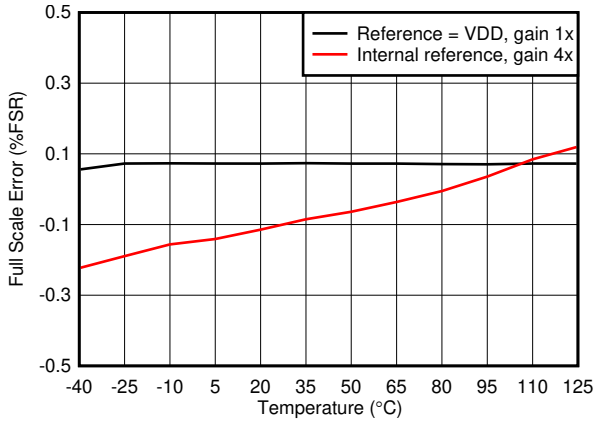

Figure 21. Full-Scale Error vs Temperature

Copyright © 2019, Texas Instruments Incorporated

7.11 Typical Characteristics

at T_A = 25°C, 10-bit DAC, and DAC outputs unloaded (unless otherwise noted)

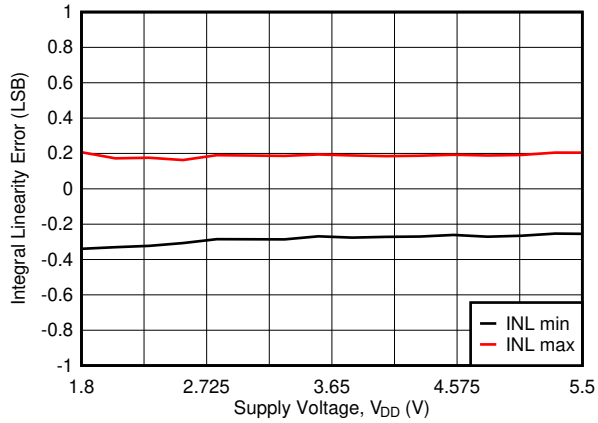

Reference = V_{DD}

Figure 22. Integral Linearity Error vs Supply Voltage

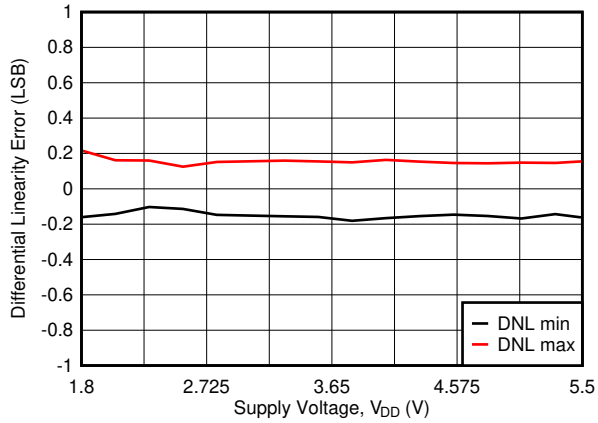

Reference = V_{DD}

Figure 23. Differential Linearity Error vs Supply Voltage

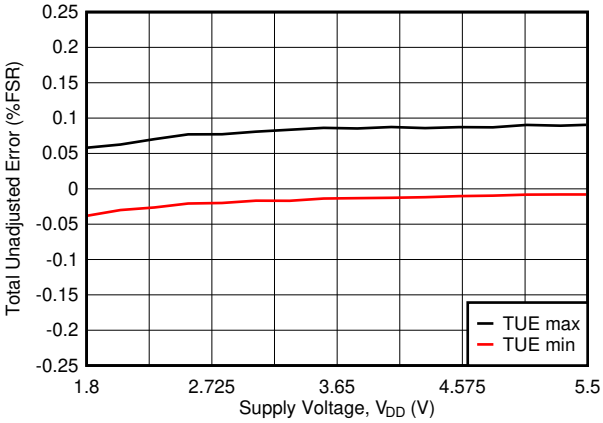

Reference = V_{DD}

Figure 24. Total Unadjusted Error vs Supply Voltage

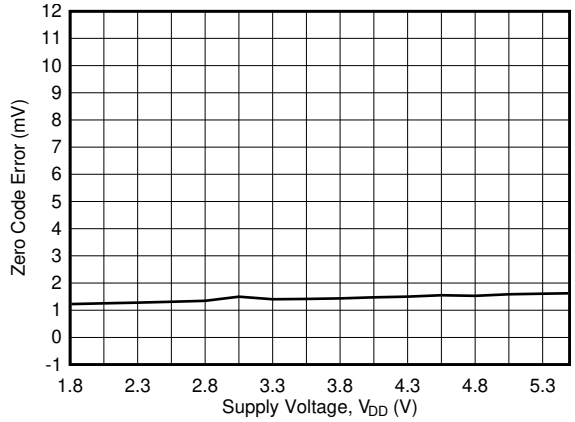

Reference = V_{DD}

Figure 25. Zero-Code Error vs Supply Voltage

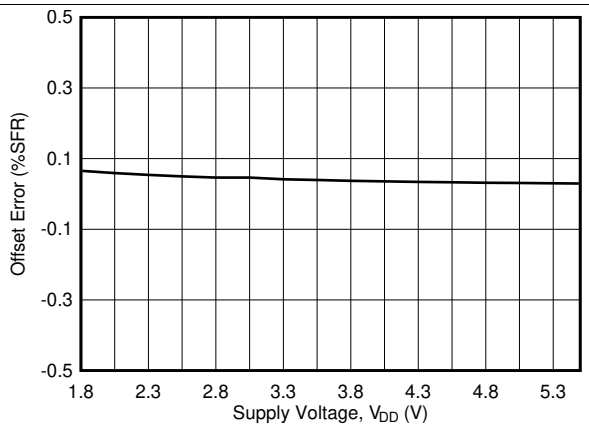

Reference = V_{DD}

Figure 26. Offset Error vs Supply Voltage

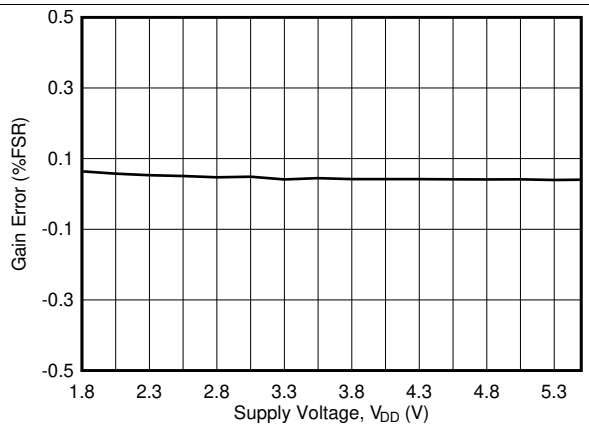

Reference = V_{DD}

Figure 27. Gain Error vs Supply Voltage

Typical Characteristics (continued)

at T_A = 25°C, 10-bit DAC, and DAC outputs unloaded (unless otherwise noted)

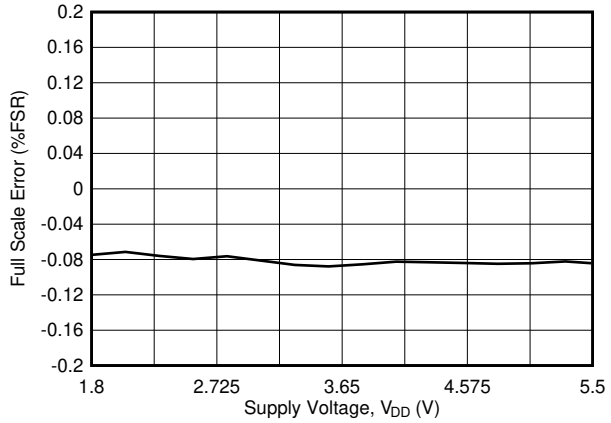

Reference = V_{DD}

Figure 28. Full-Scale Error vs Supply Voltage

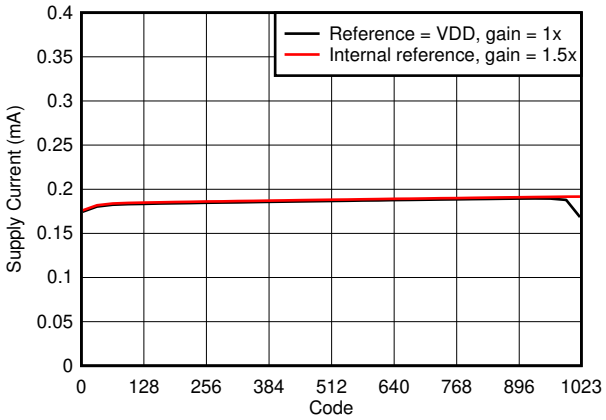

V_{DD} = 1.8 V

Figure 29. Supply Current vs Digital Input Code

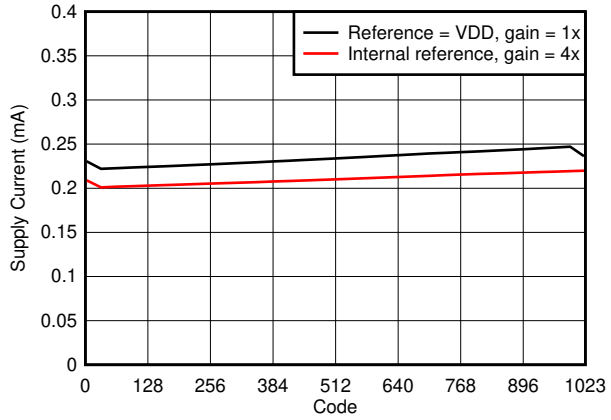

V_{DD} = 5.5 V

Figure 30. Supply Current vs Digital Input Code

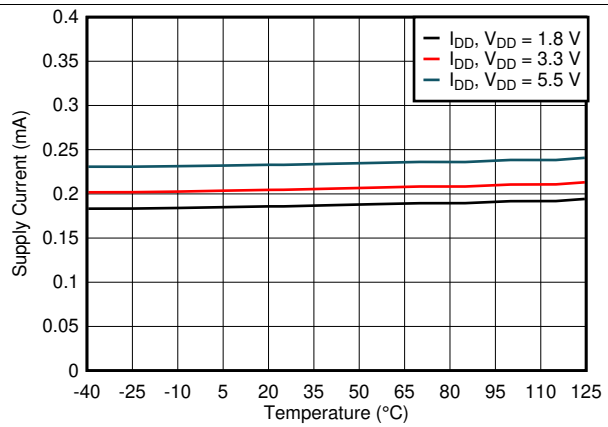

Reference = V_{DD}, DAC at midscale

Figure 31. Supply Current vs Temperature

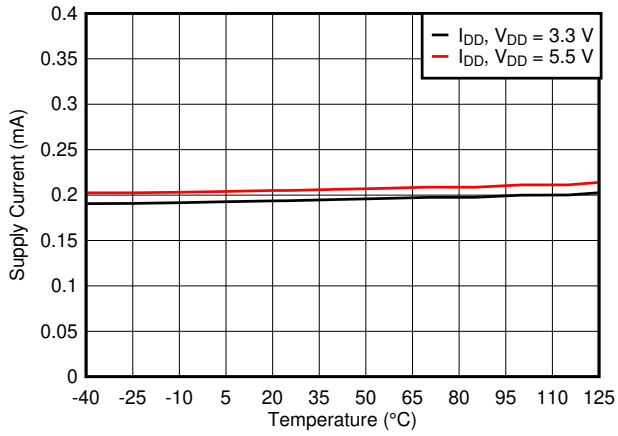

Internal reference (gain = 4x), DAC at midscale

Figure 32. Supply Current vs Temperature

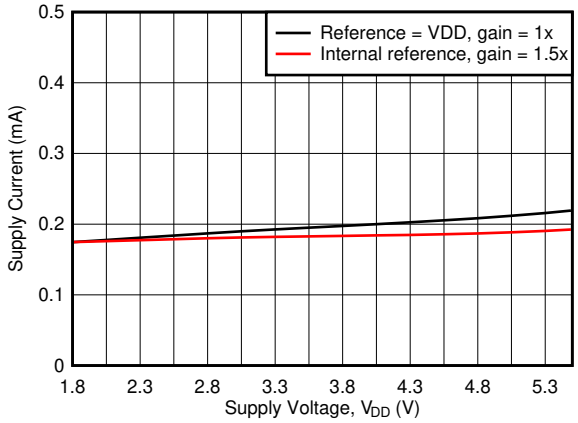

DAC at midscale

Figure 33. Supply Current vs Supply Voltage

Copyright © 2019, Texas Instruments Incorporated

Typical Characteristics (continued)

at T_A = 25°C, 10-bit DAC, and DAC outputs unloaded (unless otherwise noted)

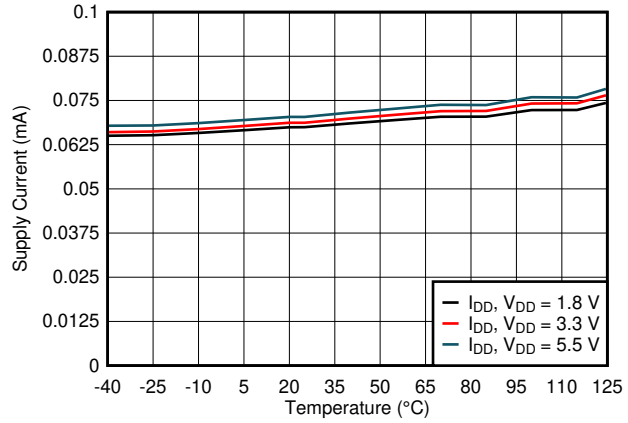

Reference = V_{DD}, DAC powered down

Figure 34. Power-Down Current vs Temperature

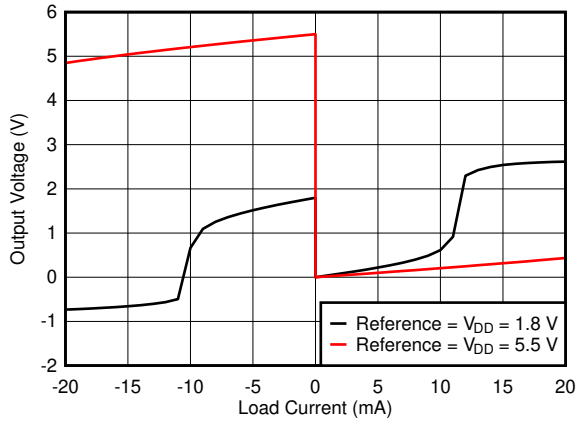

Figure 35. Source and Sink Capability

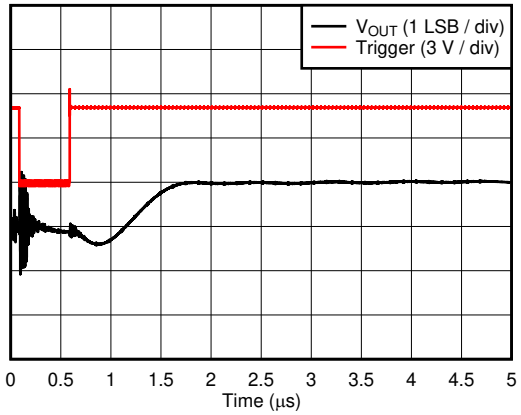

Reference = V_{DD} = 5.5 V, DAC code transition from midscale to midscale + 1 LSB, DAC load = 5kΩ || 200pF

Figure 36. Glitch Impulse, Rising Edge, 1-LSB Step

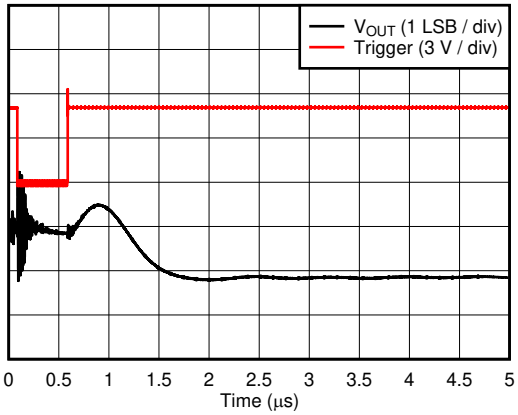

Reference = V_{DD} = 5.5 V, DAC code transition from midscale to midscale – 1 LSB, DAC load = 5kΩ || 200pF

Figure 37. Glitch Impulse, Falling Edge, 1-LSB Step

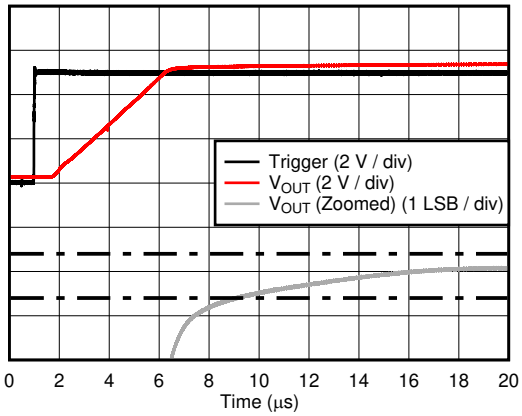

Reference = V_{DD} = 5.5 V, DAC load = 5kΩ || 200pF

Figure 38. Full-Scale Settling Time, Rising Edge

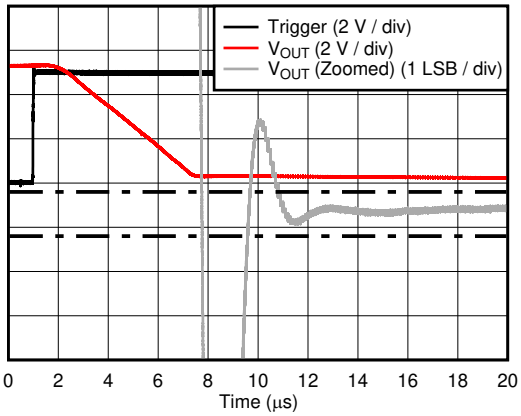

Reference = V_{DD} = 5.5 V, DAC load = 5kΩ || 200pF

Figure 39. Full-Scale Settling Time, Falling Edge

Typical Characteristics (continued)

at T_A = 25°C, 10-bit DAC, and DAC outputs unloaded (unless otherwise noted)

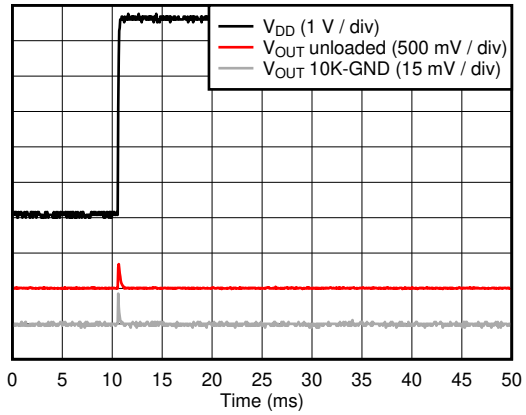

Reference = V_{DD} = 5.5 V

Figure 40. Power-on Glitch

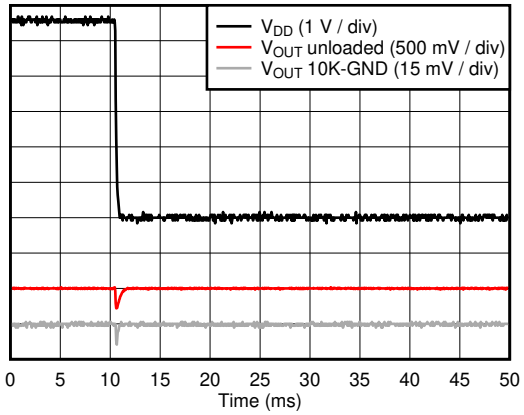

Reference = V_{DD} = 5.5 V

Figure 41. Power-off Glitch

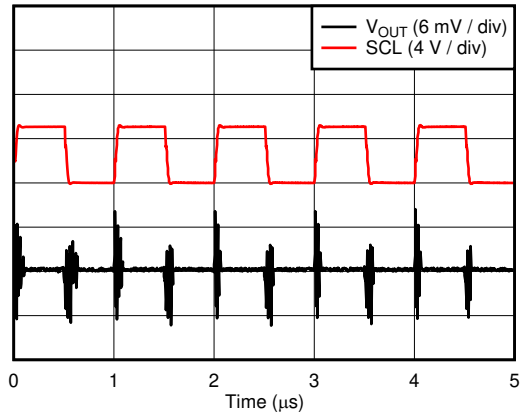

Reference = V_{DD} = 5.5 V, Fast+ mode, DAC at midscale, DAC load = 5kΩ || 200pF

Figure 42. Clock Feedthrough

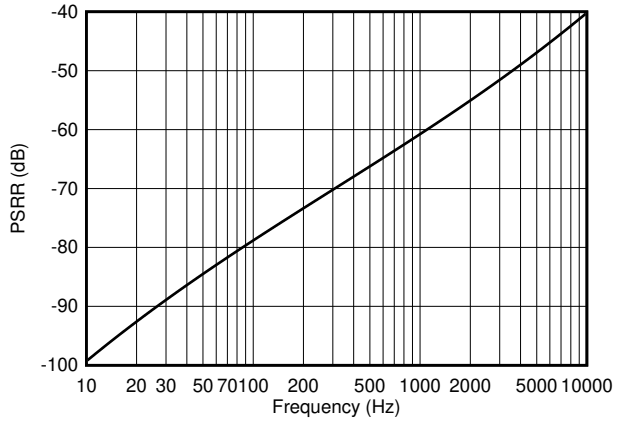

Internal reference (gain = 4x), V_{DD} = 5.25 V + 0.25 V_{PP}, DAC at midscale, DAC load = 5kΩ || 200pF

Figure 43. DAC Output AC PSRR vs Frequency

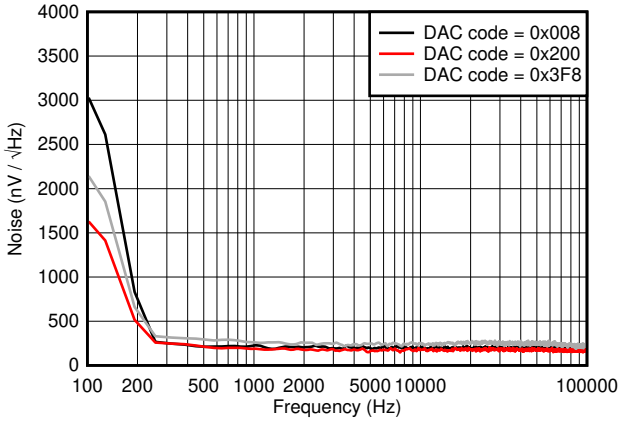

Reference = V_{DD} = 5.5 V

Figure 44. DAC Output Noise Spectral Density

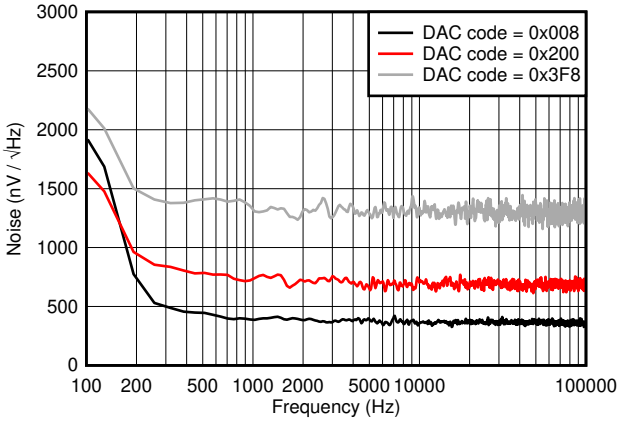

Internal reference (gain = 4x), V_{DD} = 5.5 V

Figure 45. DAC Output Noise Spectral Density

Copyright © 2019, Texas Instruments Incorporated

Typical Characteristics (continued)

at T_A = 25°C, 10-bit DAC, and DAC outputs unloaded (unless otherwise noted)

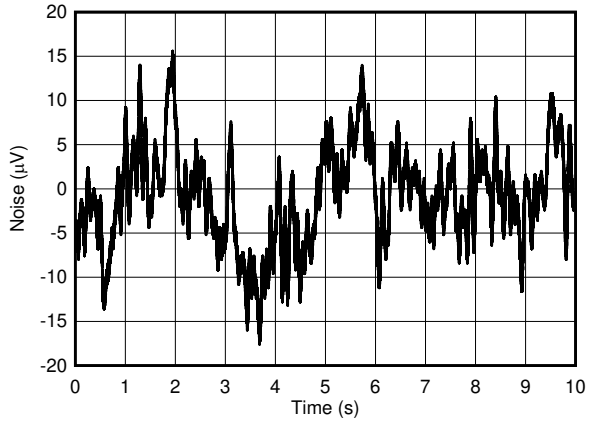

Reference = V_{DD} = 5.5 V, DAC at midscale

Figure 46. DAC Output Noise: 0.1 Hz to 10 Hz

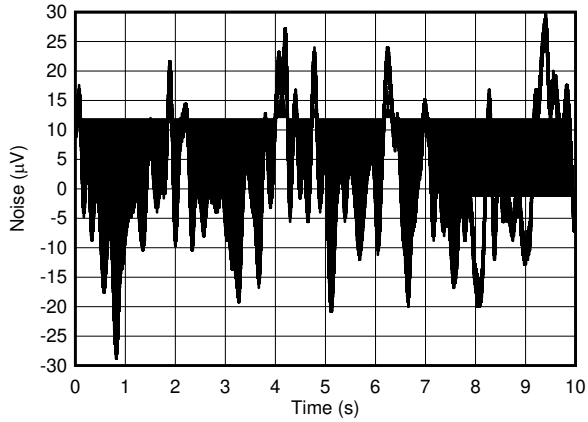

Internal reference (gain = 4x), V_{DD} = 5.5 V, DAC at midscale

Figure 47. DAC Output Noise: 0.1 Hz to 10 Hz

8 Detailed Description

8.1 Overview

The 10-bit DAC53401 and 8-bit DAC43401 (DACx3401) are a pin-compatible family of buffered voltage-output, digital-to-analog converters (DACs). These DACs contain nonvolatile memory (NVM), an internal reference, and a PMBus-compatible I^{2}C interface. The DACx3401 operate with either an internal reference or with a power supply as the reference, and provide a full-scale output of 1.8 V to 5.5 V.

The devices communicate through an I^{2}C interface. These devices support I^{2}C standard mode (100 kbps), fast mode (400 kbps), and fast+ mode (1 Mbps). These devices also support specific PMBus commands such as *turn on/off*, *margin high/low*, and more. The DACx3401 also include digital slew rate control, and support basic signal generation such as *square*, *ramp*, and *sawtooth* waveforms.

The DACx3401 devices have a power-on-reset (POR) circuit that makes sure all the registers start with default or user-programmed settings using NVM. The DAC output powers on in high-impedance mode (default); this setting can be programmed to 10kΩ-GND using NVM.

8.2 Functional Block Diagram

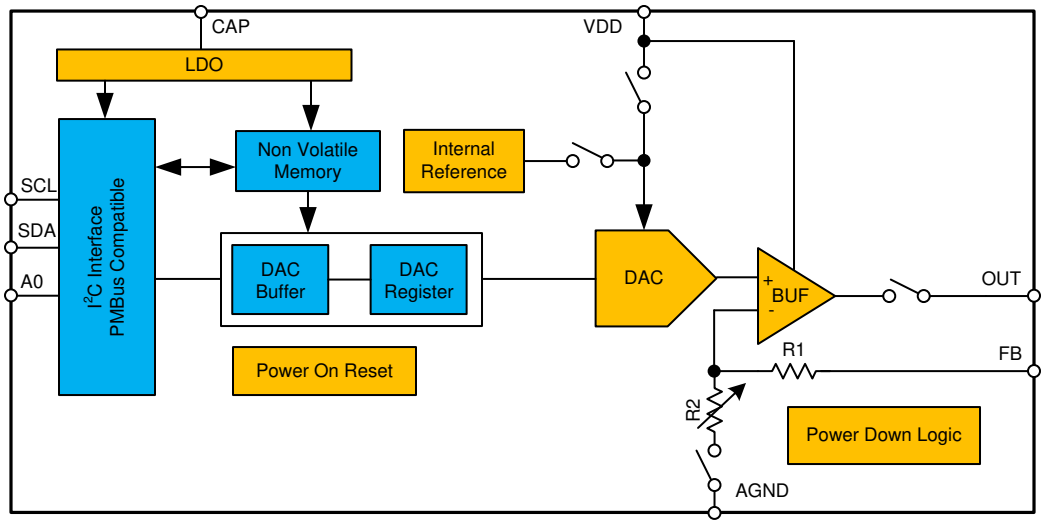

Copyright © 2019, Texas Instruments Incorporated

8.3 Feature Description

8.3.1 Digital-to-Analog Converter (DAC) Architecture

The DACx3401 family of devices consists of string architecture with an output buffer amplifier. The *Functional Block Diagram* section shows the DAC architecture within the block diagram. This DAC architecture operates from a 1.8-V to 5.5-V power supply. These devices consume only 0.2 mA of current when using a 1.8-V power supply. The DAC output pin starts up in high impedance mode making it an excellent choice for power-supply control applications. To change the power-up mode to 10kΩ-GND, program the DAC_PDN bit (address: D1h), and load these bits in the device NVM.

8.3.1.1 Reference Selection and DAC Transfer Function

The device writes the input data to the DAC data registers in straight-binary format. After a power-on or a reset event, the device sets all DAC registers to the values set in the NVM.

8.3.1.1.1 Power Supply as Reference

By default, the DACx3401 operate with the power-supply pin (VDD) as a reference. Equation 1 shows DAC transfer function when the power-supply pin is used as reference.

$$V_{OUT} = \frac{DAC_DATA}{2^N} \times V_{DD}$$

where:

- N is the resolution in bits, either 8 (DAC43401) or 10 (DAC53401).
- DAC_DATA is the decimal equivalent of the binary code that is loaded to the DAC register.
- DAC_DATA ranges from 0 to $2^N – 1$.
- V_{DD} is used as the DAC reference voltage. (1)

8.3.1.1.2 Internal Reference

The DACx3401 also contain an internal reference that is disabled by default. Enable the internal reference by writing 1 to REF_EN (address D1h). The internal reference generates a fixed 1.21-V voltage (typical). Using DAC_SPAN (address D1h) bits, gain of 1.5X, 2X, 3X, 4X can be achieved for the DAC output voltage (V_{OUT}) Equation 2 shows DAC transfer function when the internal reference is used.

$$V_{OUT} = \frac{DAC_DATA}{2^N} \times V_{REF} \times GAIN$$

where:

- N is the resolution in bits, either 8 (DAC43401) or 10 (DAC53401).
- DAC_DATA is the decimal equivalent of the binary code that is loaded to the DAC register
- DAC_DATA ranges from 0 to $2^N – 1$.
- V_{REF} is the internal reference voltage = 1.21 V.
- GAIN = 1.5x, 2x, 3x, 4x based on DAC_SPAN (address D1h) bits. (2)

Feature Description (continued)

8.3.2 DAC Update

The DAC output pin (OUT) is updated at the end of I^{2}C DAC write frame.

8.3.2.1 DAC Update Busy

The DAC_UPDATE_BUSY bit (address D0h) is set to 1 by the device when certain DAC update operations, such as *function generation*, *transition to margin high or low*, or any of the medical alarms are in progress. When the DAC_UPDATE_BUSY bit is set to 1, do not write to any of the DAC registers. After the DAC update operation is completed (DAC_UPDATE_BUSY = 0), any of the DAC registers can be written.

8.3.3 Nonvolatile Memory (EEPROM or NVM)

The DACx3401 contain nonvolatile memory (NVM) bits. These memory bits are user programmable and erasable, and retain the set values in the absence of a power supply. All the register bits, as shown in Table 1, can be stored in the device NVM by setting NVM_PROG = 1 (address D3h). The NVM_BUSY bit (address D0h) is set to 1 by device when a NVM write or reload operation is ongoing. During this time, the device blocks all write operations to the device. The NVM_BUSY bit is set to 0 after the write or reload operation is complete; at this point, all write operations to the device are allowed. The default value for all the registers in the DACx3401 is loaded from NVM as soon as a POR event is issued. Do not perform a read operation from the DAC register while NVM_BUSY = 1.

The DACx3401 also implement NVM_RELOAD bit (address D3h). Set this bit to 1 for the device to start an NVM reload operation. After the operation is complete, the device autoresets this bit to 0. During the NVM_RELOAD operation, the NVM_BUSY bit is set to 1.

Table 1. NVM Programmable Registers

REGISTER ADDRESS	REGISTER NAME	BIT ADDRESS	BIT NAME
D1h	GENERAL_CONFIG	15:14	FUNC_CONFIG
		13	DEVICE_LOCK
		11:9	CODE_STEP
		8:5	SLEW_RATE
		4:3	DAC_PDN
		2	REF_EN
		1:0	DAC_SPAN
D2h	MED_ALARM_CONFIG	10	MED_ALARM_HP
		9	MED_ALARM_MP
		8	MED_ALARM_LP
		5:4	INTERBURST_TIME
		3:2	PULSE_OFF_TIME
		1:0	PULSE_ON_TIME
D3h	TRIGGER	8	START_FUNC_GEN
10h	DAC_DATA	11:2	DAC_DATA
25h	DAC_MARGIN_HIGH	11:4	MARGIN_HIGH (8 most significant bits)
26h	DAC_MARGIN_LOW	11:4	MARGIN_LOW (8 most significant bits)

Copyright © 2019, Texas Instruments Incorporated

8.3.3.1 NVM Cyclic Redundancy Check

The DACx3401 implement a cyclic redundancy check (CRC) feature for the device NVM to make sure that the data stored in the device NVM is uncorrupted. There are two types of CRC alarm bits implemented in DACx3401: NVM_CRC_ALARM_USER and NVM_CRC_ALARM_INTERNAL. The NVM_CRC_ALARM_USER bit indicates the status of user-programmable NVM bits, and the NVM_CRC_ALARM_INTERNAL bit indicates the status of internal NVM bits The CRC feature is implemented by storing a 10-Bit CRC (CRC-10-ATM) along with the NVM data each time NVM program operation (write or reload) is performed and during the device start up. The device reads the NVM data and validates the data with the stored CRC. The CRC alarm bits (NVM_CRC_ALARM_USER and NVM_CRC_ALARM_INTERNAL address D0h) report any errors after the data are read from the device NVM.

8.3.3.2 NVM_CRC_ALARM_USER Bit

A logic 1 on NVM_CRC_ALARM_USER bit indicates that the user-programmable NVM data is corrupt. During this condition, all registers in the DAC are initialized with factory reset values, and any DAC registers can be written to or read from. To reset the alarm bits to 0, issue a software reset (see the *Software Reset* section) command, or cycle power to the DAC. Alternatively, cycle the power to reload the user-programmable NVM bits.

8.3.3.3 NVM_CRC_ALARM_INTERNAL Bit

A logic 1 on NVM_CRC_ALARM_INTERNAL bit indicates that the internal NVM data is corrupt. During this condition, all registers in the DAC are initialized with factory reset values, and any DAC registers can be written to or read from. To reset the alarm bits to 0, issue a software reset (see the *Software Reset* section) command or cycle power to the DAC.

8.3.4 Programmable Slew Rate

When the DAC data registers are written, the voltage on DAC output (V_{OUT}) immediately transitions to the new code following the slew rate and settling time specified in the *Electrical Characteristics* table. The slew rate control feature allows the user to control the rate at which the output voltage (V_{OUT}) changes. When this feature is enabled (using SLEW_RATE[3:0] bits), the DAC output changes from the current code to the code in MARGIN_HIGH (address 25h) or MARGIN_LOW (address 26h) registers (when margin high or low commands are issued to the DAC) using the step and rate set in CODE_STEP and SLEW_RATE bits. With the default slew rate control setting (CODE_STEP and SLEW_RATE bits, address D1h), the output changes smoothly at a rate limited by the output drive circuitry and the attached load. Using this feature, the output steps digitally at a rate defined by bits CODE_STEP and SLEW_RATE on address D1h. SLEW_RATE defines the rate at which the digital slew updates; CODE_STEP defines the amount by which the output value changes at each update. Table 2 and Table 3 show different settings for CODE_STEP and SLEW_RATE.

When the slew rate control feature is used, the output changes happen at the programmed slew rate. This configuration results in a staircase formation at the output. Do not write to CODE_STEP, SLEW_RATE, or DAC_DATA during the output slew.

Table 2. Code Step

REGISTER ADDRESS AND NAME	CODE_STEP[2]	CODE_STEP[1]	CODE_STEP[0]	COMMENT
D1h, GENERAL_CONFIG	0	0	0	Code step size = 1 LSB (default)
	0	0	1	Code step size = 2 LSB
	0	1	0	Code step size = 3 LSB
	0	1	1	Code step size = 4 LSB
	1	0	0	Code step size = 6 LSB
	1	0	1	Code step size = 8 LSB
	1	1	0	Code step size = 16 LSB
	1	1	1	Code step size = 32 LSB

Table 3. Slew Rate

REGISTER ADDRESS AND NAME	SLEW_RATE[3]	SLEW_RATE[2]	SLEW_RATE[1]	SLEW_RATE[0]	COMMENT
D1h, GENERAL_CONFIG	0	0	0	0	25.6 µs (per step)
	0	0	0	1	25.6 µs × 1.25 (per step)
	0	0	1	0	25.6 µs × 1.50 (per step)
	0	0	1	1	25.6 µs × 1.75 (per step)
	0	1	0	0	204.8 µs (per step)
	0	1	0	1	204.8 µs × 1.25 (per step)
	0	1	1	0	204.8 µs × 1.50 (per step)
	0	1	1	1	204.8 µs × 1.75 (per step)
	1	0	0	0	1.6384 ms (per step)
	1	0	0	1	1.6384 ms × 1.25 (per step)
	1	0	1	0	1.6384 ms × 1.50 (per step)
	1	0	1	1	1.6384 ms × 1.75 (per step)
	1	1	0	0	12 µs (per step)
	1	1	0	1	8 µs (per step)
	1	1	1	0	4 µs (per step)
	1	1	1	1	No slew (default)

Copyright © 2019, Texas Instruments Incorporated

8.3.5 Power-on-Reset (POR)

The DACx3401 family of devices includes a power-on reset (POR) function that controls the output voltage at power up. After the V_{DD} supply has been established, a POR event is issued. The POR causes all registers to initialize to default values, and communication with the device is valid only after a 30-ms, POR delay. The default value for all the registers in the DACx3401 is loaded from NVM as soon as the POR event is issued.

When the device powers up, a POR circuit sets the device to the default mode. The POR circuit requires specific V_{DD} levels, as indicated in Figure 48, in order to make sure that the internal capacitors discharge and reset the device on power up. To make sure that a POR occurs, V_{DD} must be less than 0.7 V for at least 1 ms. When V_{DD} drops to less than 1.65 V, but remains greater than 0.7 V (shown as the undefined region), the device may or may not reset under all specified temperature and power-supply conditions. In this case, initiate a POR. When V_{DD} remains greater than 1.65 V, a POR does not occur.

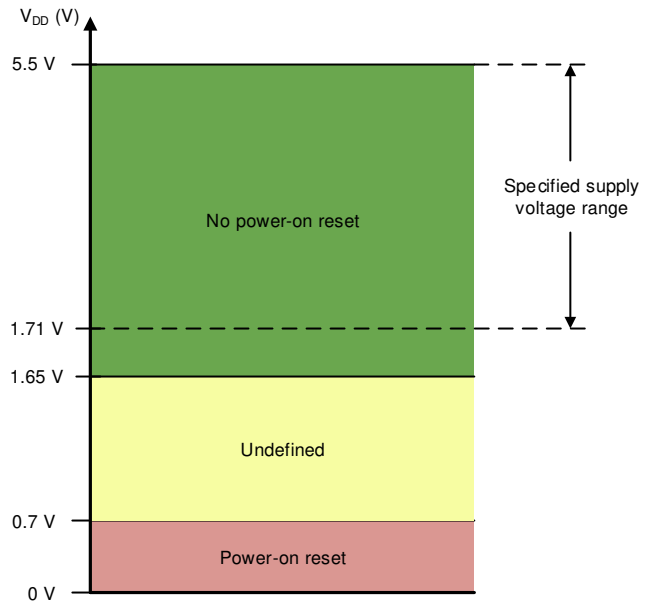

Figure 48. Threshold Levels for V_{DD} POR Circuit

8.3.6 Software Reset

To initiate a device software reset event, write the reserved code 1010 to the SW_RESET (address D3h). A software reset initiates a POR event.

8.3.7 Device Lock Feature

The DACx3401 implement a device lock feature that prevents an accidental or unintended write to the DAC registers. The device locks all the registers when the DEVICE_LOCK bit (address D1h) is set to 1. To bypass the DEVICE_LOCK setting, write 0101 to the DEVICE_UNLOCK_CODE bits (address D3h).

8.3.8 PMBus Compatibility

PMBus is an I^{2}C-based communication standard for power-supply management. PMBus contains standard command codes tailored to power supply applications. The DACx3401 implement some PMBus commands such as *Turn Off*, *Turn On*, *Margin Low*, *Margin High*, *Communication Failure Alert Bit (CML)*, as well as *PMBUS revision*. Figure 49 shows typical PMBus connections. The EN_PMBus bit (Bit 12, address D1h) must be set to 1 to enable the PMBus protocol.

Similar to I^{2}C, PMBus is a variable length packet of 8-bit data bytes, each with a receiver acknowledge, wrapped between a start and stop bit. The first byte is always a 7-bit *slave address* followed by a *write* bit, sometimes called the *even address* that identifies the intended receiver of the packet. The second byte is an 8-bit *command* byte, identifying the PMBus command being transmitted using the respective command code. After the command byte, the transmitter either sends data associated with the command to write to the receiver command register (from most significant byte to least significant byte), or sends a new start bit indicating the desire to read the data associated with the command register from the receiver. After, the receiver transmits the data following the same most significant byte first format (see Table 10).

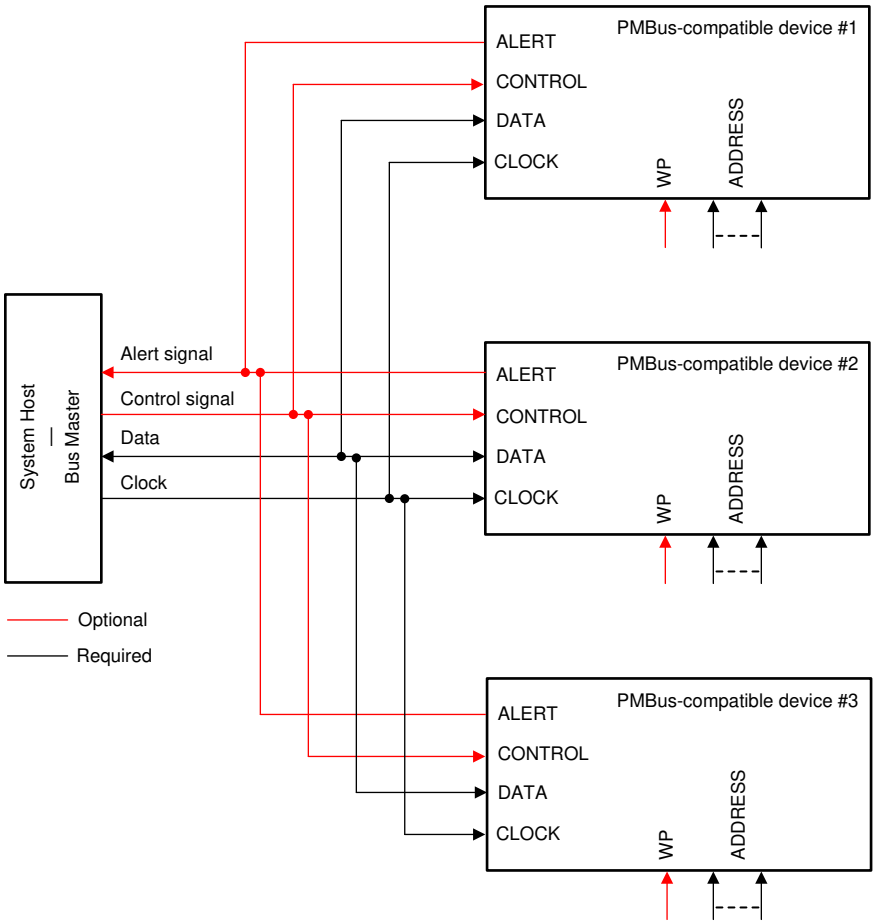

Figure 49. PMBus Connections

Copyright © 2019, Texas Instruments Incorporated

8.4 Device Functional Modes

8.4.1 Power Down Mode

The DACx3401 output amplifier and internal reference can be independently powered down through the DAC_PDN bits (address D1h). At power up, the DAC output and the internal reference are disabled by default. In power-down mode, the DAC output (OUT pin) is in a high-impedance state. To change this state to 10kΩ-A_{GND} (at power up), use the DAC_PDN bits (address D1h).

The DAC power-up state can be programmed to any state (power-down or normal mode) using the NVM. Table 4 shows the DAC power-down bits.

Table 4. DAC Power-Down Bits

REGISTER ADDRESS AND NAME	DAC_PDN[1]	DAC_PDN[0]	DESCRIPTION
D1h, GENERAL_CONFIG	0	0	Power up
	0	1	Power down to 10 kΩ
	1	0	Power down to high impedance (HiZ) (default)
	1	1	Power down to 10 kΩ

8.4.2 Continuous Waveform Generation (CWG) Mode

The DACx3401 implement a continuous waveform generation feature. To set the device to this mode, set the START_FUNC_GEN (address D3h) to 1. In this mode, the DAC output pin (OUT) generates a continuous waveform based on the FUNC_CONFIG bits (address D1h). Table 5 shows the continuous waveforms that can be generated in this mode. The frequency of the waveform depends on the resistive and capacitive load on the OUT pin, high and low codes, and slew rate settings as shown in the following equations.

$$f_{SQUARE-WAVE} = \frac{1}{2 \times SLEW_RATE}$$

where:

- SLEW_RATE is the programmable DAC slew rate specified in Table 3. (3)

$$f_{TRIANGLE-WAVE} = \frac{1}{2 \times SLEW_RATE \times \left(\frac{MARGIN_HIGH - MARGIN_LOW + 1}{CODE_STEP}\right)}$$

where:

- SLEW_RATE is the programmable DAC slew rate specified in Table 3.
- MARGIN_HIGH and MARGIN_LOW are the programmable DAC codes.
- CODE_STEP is the programmable DAC step code in Table 2. (4)

$$f_{SAWTOOTH-WAVE} = \frac{1}{SLEW_RATE \times \left(\frac{MARGIN_HIGH - MARGIN_LOW + 1}{CODE_STEP}\right)}$$

where:

- SLEW_RATE is the programmable DAC slew rate specified in Table 3.
- MARGIN_HIGH and MARGIN_LOW are the programmable DAC codes.
- CODE_STEP is the programmable DAC step code in Table 2. (5)

Table 5. FUNC_CONFIG bits

REGISTER ADDRESS AND NAME	FUNC_CONFIG[1]	FUNC_CONFIG[0]	DESCRIPTION
D1h, GENERAL_CONFIG	0	0	Generates a triangle wave between MARGIN_HIGH (address 25h) code to MARGIN_LOW (address 26h) code with slope defined by SLEW_RATE (address D1h) bits
	0	1	Generates Saw-Tooth wave between MARGIN_HIGH (address 25h) code to MARGIN_LOW (address 26h) code, with rising slope defined by SLEW_RATE (address D1h) bits and immediate falling edge
	1	0	Generates Saw-Tooth wave between MARGIN_HIGH (address 25h) code to MARGIN_LOW (address 26h) code, with falling slope defined by SLEW_RATE (address D1h) bits and immediate rising edge
	1	1	Generates a square wave between MARGIN_HIGH (address 25h) code to MARGIN_LOW (address 26h) code with pulse high and low period defined by SLEW_RATE (address D1h) bits

8.4.3 PMBus Compatibility Mode

The DACx3401 I^2C interface implements some of the PMBus commands. Table 6 shows the supported PMBus commands that are implemented in DACx3401.The DAC uses MARGIN_LOW (address 26h), MARGIN_HIGH (address 25h) bits, SLEW_RATE, and CODE_STEP bits (address D1h) for PMBUS_OPERATION_CMD. The EN_PMBus bit (Bit 12, address D1h) must be set to 1 to enable the PMBus protocol.

Table 6. PMBus Operation Commands

REGISTER ADDRESS AND NAME	PMBUS_OPERATION_CMD[15:8]	DESCRIPTION
01h, PMBUS_OPERATION	00h	Turn off
	80h	Turn on
	94h	Margin low
	A4h	Margin high

The DACx3401 also implement PMBus features such as group command protocol and communication time-out failure. The CML bit (address 78h) indicates a communication fault in the PMBus. This bit is reset by writing 1. In case of timeout, if the SDA line is held low, the SDA line stays low during the time-out event until next SCL pulse is received.

To get the PMBus version, read the PMBUS_VERSION bits (address 98h).

8.4.4 Medical Alarm Generation Mode

The DACx3401 are also used to generate continuous alarm tones for medical devices. Use a suitable analog mixer, audio amplifier, and a speaker to generate low, medium, or high priority alarm tones. See the *Application and Implementation* section for more details. The DACx3401 allow tunability and configurability to support different alarm generation. Using this approach, configurable medical alarm tones can be generated with a simple circuit, and with no need for runtime software.

8.4.4.1 Low-Priority Alarm

The MED_ALARM_LP bit (address D2h) is used to trigger a medical low-priority alarm generation. The DAC generates a continuous-alarm signal until this bit is set back to 0. After the bit is set to 0, the device does not abruptly end the alarm generation; the device stops only after completing the ongoing burst.

Copyright © 2019, Texas Instruments Incorporated

8.4.4.2 Medium-Priority Alarm

The MED_ALARM_MP bit (address D2h) is used to trigger a medical medium-priority alarm generation. The DAC generates a continuous-alarm signal until this bit is set back to 0. After the bit is set to 0, the device does not abruptly end the alarm generation; the device stops only after completing the ongoing burst.

8.4.4.3 High-Priority Alarm

The MED_ALARM_HP bit (address D2h) is used to trigger a medical high-priority alarm generation. The DAC generates a continuous-alarm signal until this bit is set back to 0. After the bit is set to 0, the device does not abruptly end the alarm generation; the device stops only after completing the ongoing burst.

8.4.4.4 Interburst Time

The INTERBURST_TIME bit (address D2h) is used set the time between two adjacent bursts. Table 7 lists the INTERBURST_TIME settings.

Table 7. Interburst Time

REGISTER ADDRESS AND NAME	INTERBURST_TIME[1:0]	HIGH PRIORITY ALARM INTERBURST TIME	MEDIUM PRIORITY ALARM INTERBURST TIME	LOW PRIORITY ALARM INTERBURST TIME
D2h, MED_ALARM_CONFIG	00	2.55 s	2.60 s	16 s
	01	2.96 s	3.06 s	
	10	3.38 s	3.52 s	
	11	3.80 s	4.00 s	

8.4.4.5 Pulse Off Time

The PULSE_OFF_TIME bit (address D2h) is used to control the low period of trapezoid in a medical alarm waveform. Table 8 lists the PULSE_OFF_TIME settings.

Table 8. Pulse Off Time

REGISTER ADDRESS AND NAME	PULSE_OFF_TIME[1:0]	HIGH PRIORITY ALARM PULSE OFF TIME	MEDIUM PRIORITY ALARM PULSE OFF TIME	LOW PRIORITY ALARM PULSE OFF TIME
D2h, MED_ALARM_CONFIG	00	15 ms	40 ms	40 ms
	01	36 ms	60 ms	60 ms
	10	58 ms	80 ms	80 ms
	11	80 ms	100 ms	100 ms

8.4.4.6 Pulse On Time

The PULSE_ON_TIME bit (address D2h) controls the high period of trapezoid in a medical alarm waveform. Table 9 lists the PULSE_ON_TIME settings.

Table 9. Pulse On Time

REGISTER ADDRESS AND NAME	PULSE_ON_TIME[1:0]	HIGH PRIORITY ALARM PULSE ON TIME	MEDIUM PRIORITY ALARM PULSE ON TIME	LOW PRIORITY ALARM PULSE ON TIME
D2h, MED_ALARM_CONFIG	00	80 ms	130 ms	130 ms
	01	103 ms	153 ms	153 ms
	10	126 ms	176 ms	176 ms
	11	150 ms	200 ms	200 ms

Copyright © 2019, Texas Instruments Incorporated

8.5 Programming

The DACx3401 devices have a 2-wire serial interface (SCL and SDA), and one address pin (A0), as shown in the *Pin Configuration and Functions* section. The I^{2}C bus consists of a data line (SDA) and a clock line (SCL) with pullup structures. When the bus is idle, both SDA and SCL lines are pulled high. All the I^{2}C-compatible devices connect to the I^{2}C bus through the open drain I/O pins, SDA and SCL.

The I^{2}C specification states that the device that controls communication is called a *master*, and the devices that are controlled by the master are called *slaves*. The master device generates the SCL signal. The master device also generates special timing conditions (start condition, repeated start condition, and stop condition) on the bus to indicate the start or stop of a data transfer. Device addressing is completed by the master. The master device on an I^{2}C bus is typically a microcontroller or digital signal processor (DSP). The DACx3401 family operates as a slave device on the I^{2}C bus. A slave device acknowledges master commands, and upon master control, receives or transmits data.

Typically, the DACx3401 family operates as a slave receiver. A master device writes to the DACx3401, a slave receiver. However, if a master device requires the DACx3401 internal register data, the DACx3401 operate as a slave transmitter. In this case, the master device reads from the DACx3401. According to I^{2}C terminology, read and write refer to the master device.

The DACx3401 family is a slave and supports the following data transfer modes:

- Standard mode (100 kbps)
- Fast mode (400 kbps)
- Fast+ mode (1.0 Mbps)

The data transfer protocol for standard and fast modes is exactly the same; therefore, both modes are referred to as F/S-mode in this document. The fast+ mode protocol is supported in terms of data transfer speed, but not output current. The low-level output current would be 3 mA; similar to the case of standard and fast modes. The DACx3401 family supports 7-bit addressing. The 10-bit addressing mode is not supported. The device supports the general call reset function. Sending the following sequence initiates a software reset within the device: start or repeated start, 0x00, 0x06, stop. The reset is asserted within the device on the rising edge of the ACK bit, following the second byte.

Other than specific timing signals, the I^{2}C interface works with serial bytes. At the end of each byte, a ninth clock cycle generates and detects an acknowledge signal. Acknowledge is when the SDA line is pulled low during the high period of the ninth clock cycle. A not-acknowledge is when the SDA line is left high during the high period of the ninth clock cycle as shown in Figure 50.

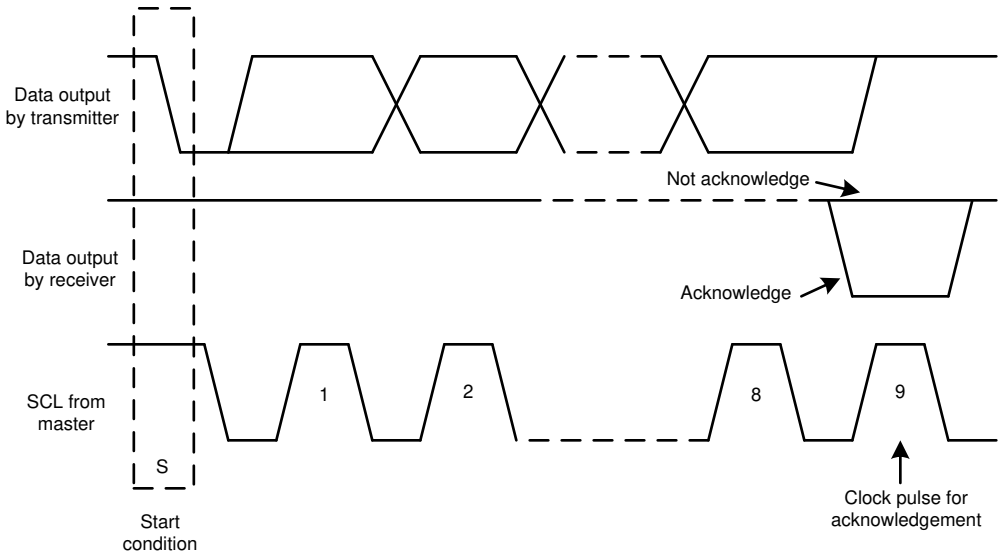

Figure 50. Acknowledge and Not Acknowledge on the I^{2}C Bus

Copyright © 2019, Texas Instruments Incorporated

Programming (continued)

8.5.1 F/S Mode Protocol

The following steps explain a complete transaction in F/S mode.

1. The master initiates data transfer by generating a start condition. The start condition is when a high-to-low transition occurs on the SDA line while SCL is high, as shown in Figure 51. All I^2C-compatible devices recognize a start condition.
2. The master then generates the SCL pulses, and transmits the 7-bit address and the read/write direction bit (R/W) on the SDA line. During all transmissions, the master makes sure that data are valid. A valid data condition requires the SDA line to be stable during the entire high period of the clock pulse, as shown in Figure 52. All devices recognize the address sent by the master and compare the address to the respective internal fixed address. Only the slave device with a matching address generates an acknowledge by pulling the SDA line low during the entire high period of the 9th SCL cycle, as shown in Figure 50. When the master detects this acknowledge, the communication link with a slave has been established.
3. The master generates further SCL cycles to transmit (R/W bit 0) or receive (R/W bit 1) data to the slave. In either case, the receiver must acknowledge the data sent by the transmitter. The acknowledge signal can be generated by the master or by the slave, depending on which is the receiver. The 9-bit valid data sequences consists of 8-data bits and 1 acknowledge-bit, and can continue as long as necessary.
4. To signal the end of the data transfer, the master generates a stop condition by pulling the SDA line from low-to-high while the SCL line is high (see Figure 51). This action releases the bus and stops the communication link with the addressed slave. All I^2C-compatible devices recognize the stop condition. Upon receipt of a stop condition, the bus is released, and all slave devices then wait for a start condition followed by a matching address.

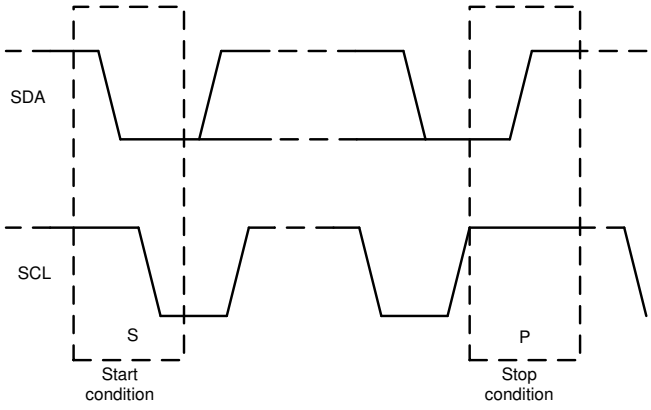

Figure 51. Start and Stop Conditions

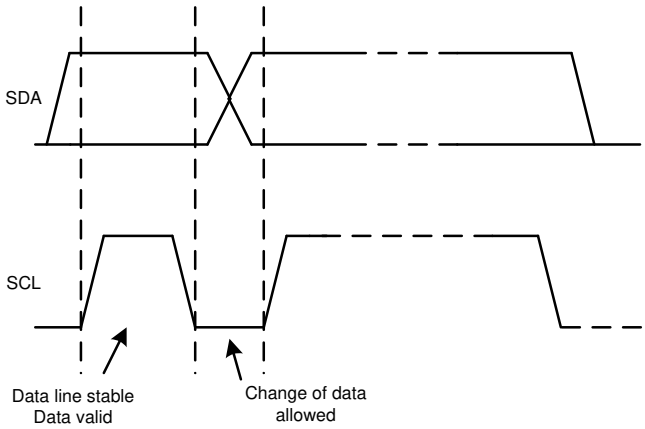

Figure 52. Bit Transfer on the I^2C Bus

8.5.2 DACx3401 I²C Update Sequence

For a single update, the DACx3401 require a start condition, a valid I²C address byte, a command byte, and two data bytes, as listed in Table 10.

Table 10. Update Sequence

MSB	....	LSB	ACK	MSB	...	LSB	ACK	MSB	...	LSB	ACK	MSB	...	LSB	ACK
Address (A) byte Address Byte				Command byte Command Byte				Data byte - MSDB Application Curves				Data byte - LSDB Application Curves			
DB [31:24]				DB [23:16]				DB [15:8]				DB [7:0]			

After each byte is received, the DACx3401 family acknowledges the byte by pulling the SDA line low during the high period of a single clock pulse, as shown in Figure 53. These four bytes and acknowledge cycles make up the 36 clock cycles required for a single update to occur. A valid I²C address byte selects the DACx3401 devices.

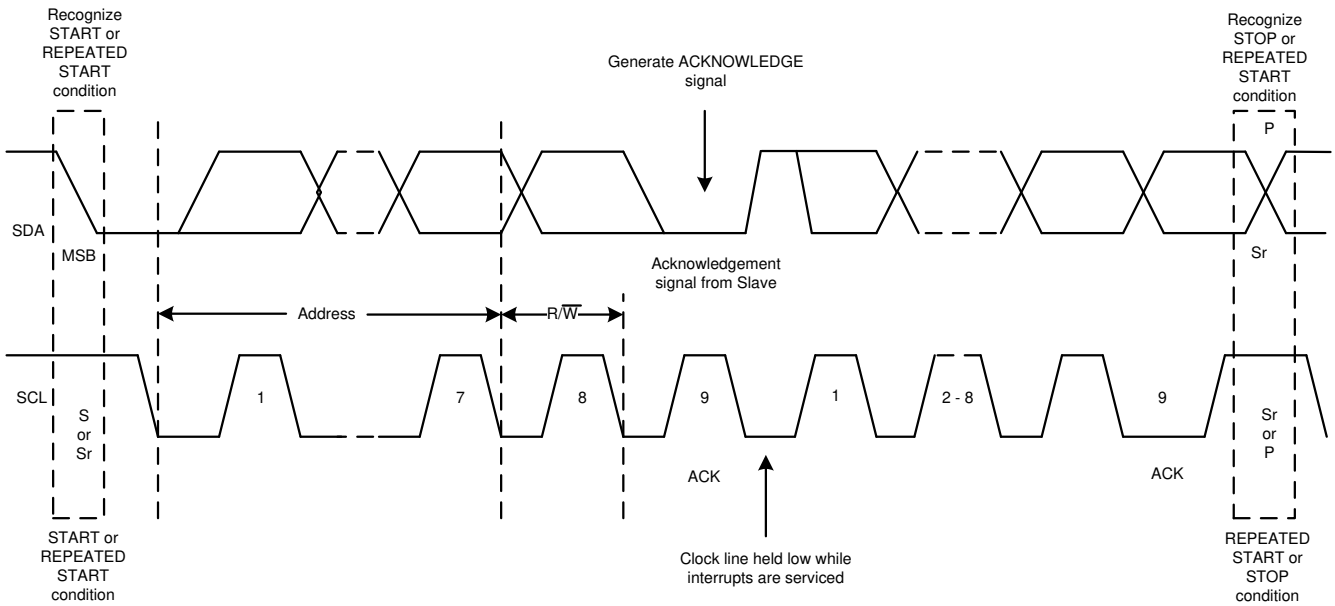

Figure 53. I²C Bus Protocol

The command byte sets the operating mode of the selected DACx3401 device. For a data update to occur when the operating mode is selected by this byte, the DACx3401 device must receive two data bytes: the most significant data byte (MSDB) and least significant data byte (LSDB). The DACx3401 device performs an update on the falling edge of the acknowledge signal that follows the LSDB.

When using fast mode (clock = 400 kHz), the maximum DAC update rate is limited to 10 kSPS. Using the fast+ mode (clock = 1 MHz), the maximum DAC update rate is limited to 25 kSPS. When a stop condition is received, the DACx3401 device releases the I²C bus and awaits a new start condition.

8.5.3 Address Byte

The address byte, as shown in Table 11, is the first byte received following the start condition from the master device. The first four bits (MSBs) of the address are factory preset to 1001. The next three bits of the address are controlled by the A0 pin. The A0 pin input can be connected to VDD, AGND, SCL, or SDA. The A0 pin is sampled during the first byte of each data frame to determine the address. The device latches the value of the address pin, and consequently responds to that particular address according to Table 12.

The DACx3401 family supports broadcast addressing, which can be used for synchronously updating or powering down multiple DACx3401 devices. The DACx3401 family is designed to work with other members of the family to support multichip synchronous updates. Using the broadcast address, the DACx3401 devices respond regardless of the states of the address pins. Broadcast is supported only in write mode.

Copyright © 2019, Texas Instruments Incorporated

Table 11. Address Byte

COMMENT	MSB							LSB
—	AD6	AD5	AD4	AD3	AD2	AD1	AD0	R/$\overline{W}$
General address	1	0	0	1	See Table 12 (slave address column)			0 or 1
Broadcast address	1	0	0	0	1	1	1	0

Table 12. Address Format

SLAVE ADDRESS	A0 PIN
000	AGND
001	VDD
010	SDA
011	SCL

8.5.4 Command Byte

Table 16 lists the command byte.

Table 13. Command Byte (Register Names)

ADDRESS	REGISTER NAME
D0h	STATUS
D1h	GENERAL_CONFIG
D2h	MED_ALARM_CONFIG
D3h	TRIGGER
21h	DAC_DATA
25h	DAC_MARGIN_HIGH
26h	DAC_MARGIN_LOW
01h	PMBUS_OP
78h	PMBUS_STATUS_BYTE
98h	PMBUS_VERSION

8.5.5 I^{2}C Read Sequence

To read any register the following command sequence must be used:

1. Send a start or repeated start command with a slave address and the R/$\overline{W}$ bit set to 0 for writing. The device acknowledges this event.
2. Send a command byte for the register to be read. The device acknowledges this event again.
3. Send a repeated start with the slave address and the R/$\overline{W}$ bit set to 1 for reading. The device acknowledges this event.
4. The device writes the MSDB byte of the addressed register. The master must acknowledge this byte.
5. Finally, the device writes out the LSDB of the register.

An alternative reading method allows for reading back the value of the last register written. The sequence is a start or repeated start with the slave address and the R/$\overline{W}$ bit set to 1, and the two bytes of the last register are read out.

Note that it is not possible to use the broadcast address for reading.

Table 14. Read Sequence

S	MSB	…	R/$\overline{W}$ (0)	ACK	MSB	…	LSB	ACK	Sr	MSB	…	R/$\overline{W}$ (1)	ACK	MSB	…	LSB	ACK	MSB	…	LSB	ACK
	ADDRESS BYTE Address Byte				COMMAND BYTE Command Byte				Sr	ADDRESS BYTE Address Byte				MSDB				LSDB			
From Master				Slave	From Master			Slave	From Master				Slave	From Slave			Master	From Slave			Master

8.6 Register Map

Table 15. Register Map

ADDRESS	MOST SIGNIFICANT DATA BYTE (MSDB)								LEAST SIGNIFICANT DATA BYTE (LSDB)							
	BIT15	BIT14	BIT13	BIT12	BIT11	BIT10	BIT9	BIT8	BIT7	BIT6	BIT5	BIT4	BIT3	BIT2	BIT1	BIT0
D0h	NVM_CRC_ALARM_USER	NVM_CRC_ALARM_INTERNAL	NVM_BUSY	DAC_UPDATE_BUSY	X[1]						DEVICE_ID				VERSION_ID	
D1h	FUNC_CONFIG		DEVICE_LOCK	EN_PMBUS	CODE_STEP			SLEW_RATE				DAC_PDN		REF_EN	DAC_SPAN	
D2h	X					MED_ALARM_HP	MED_ALARM_MP	MED_ALARM_LP	RESERVED		INTERBURST_TIME		PULSE_OFF_TIME		PULSE_ON_TIME	
D3h	DEVICE_UNLOCK_CODE				X		DEVICE_CONFIG_RESET	START_FUNC_GEN	PMBUS_MARGIN_HIGH	PMBUS_MARGIN_LOW	NVM_RELOAD	NVM_PROG	SW_RESET			
21h	X				DAC_DATA[9:0] (10-Bit) or DAC_DATA[7:0] (8-Bit)										X	
25h	X				MARGIN_HIGH[9:0] (10-Bit) or MARGIN_HIGH[7:0] (8-Bit)										X	
26h	X				MARGIN_LOW[9:0] (10-Bit) or MARGIN_LOW[7:0] (8-Bit)										X	
01h	PMBUS_OPERATION_CMD								N/A							
78h	X						CML	N/A								
98h	PMBUS_VERSION								N/A							

(1) X = Don't care.

Copyright © 2019, Texas Instruments Incorporated

Table 16. Register Names

ADDRESS	REGISTER NAME	SECTION
D0h	STATUS	STATUS Register (address = D0h) (reset = 000Ch or 0014h)
D1h	GENERAL_CONFIG	GENERAL_CONFIG Register (address = D1h) (reset = 01F0h)
D2h	MED_ALARM_CONFIG	MED_ALARM_CONFIG Register (address = D2h) (reset = 0000h)
D3h	TRIGGER	TRIGGER Register (address = D3h) (reset = 0008h)
21h	DAC_DATA	DAC_DATA Register (address = 21h) (reset = 0000h)
25h	DAC_MARGIN_HIGH	DAC_MARGIN_HIGH Register (address = 25h) (reset = 0000h)
26h	DAC_MARGIN_LOW	DAC_MARGIN_LOW Register (address = 26h) (reset = 0000h)
01h	PMBUS_OPERATION	PMBUS_OPERATION Register (address = 01h) (reset = 0000h)
78h	PMBUS_STATUS_BYTE	PMBUS_STATUS_BYTE Register (address = 78h) (reset = 0000h)
98h	PMBUS_VERSION	PMBUS_VERSION Register (address = 98h) (reset = 2200h)

Table 17. Access Type Codes

Access Type	Code	Description
X	X	Don't care
Read Type		
R	R	Read
Write Type		
W	W	Write
Reset or Default Value		
-n		Value after reset or the default value

8.6.1 STATUS Register (address = D0h) (reset = 000Ch or 0014h)

Figure 54. STATUS Register

15	14	13	12	11 10 9 8 7 6	5 4 3 2	1 0
NVM_CRC_ALARM_USER	NVM_CRC_ALARM_INTERNAL	NVM_BUSY	DAC_UPDATE_BUSY	X	DEVICE_ID	VERSION_ID
R-0h	R-0h	R-0h	R-0h	X-00h	10-bit: R-0Ch 8-bit: R-14h	

Table 18. STATUS Register Field Descriptions

Bit	Field	Type	Reset	Description
15	NVM_CRC_ALARM_USER	R	0	0 : No CRC error in user NVM bits 1: CRC error in user NVM bits
14	NVM_CRC_ALARM_INTERNAL	R	0	0 : No CRC error in internal NVM 1: CRC error in internal NVM bits
13	NVM_BUSY	R	0	0 : NVM write or load completed, Write to DAC registers allowed 1 : NVM write or load in progress, Write to DAC registers not allowed
12	DAC_UPDATE_BUSY	R	0	0 : DAC outputs updated, Write to DAC registers allowed 1 : DAC outputs update in progress, Write to DAC registers not allowed
11 - 6	X	X	00h	Don't care
5 - 2	DEVICE_ID	R	DAC53401: 0Ch DAC43401: 14h	DAC53401: 0Ch DAC43401: 14h
1 - 0	VERSION_ID			

8.6.2 GENERAL_CONFIG Register (address = D1h) (reset = 01F0h)

Figure 55. GENERAL_CONFIG Register

15 14	13	12	11 10 9	8 7 6 5	4 3	2	1 0
FUNC_CONFIG	DEVICE_LOCK	EN_PMBUS	CODE_STEP	SLEW_RATE	DAC_PDN	REF_EN	DAC_SPAN
R/$\overline{W}$-0h	$\overline{W}$-0h	R/$\overline{W}$-0h	R/$\overline{W}$-0h	R/$\overline{W}$-Fh	R/$\overline{W}$-2h	R/$\overline{W}$-0h	R/$\overline{W}$-0h

Table 19. GENERAL_CONFIG Register Field Descriptions

Bit	Field	Type	Reset	Description
15 - 14	FUNC_CONFIG	R/$\overline{W}$	00	00 : Generates a triangle wave between MARGIN_HIGH (address 25h) code to MARGIN_LOW (address 26h) code with slope defined by SLEW_RATE (address D1h) bits. 01: Generates Saw-Tooth wave between MARGIN_HIGH (address 25h) code to MARGIN_LOW (address 26h) code, with rising slope defined by SLEW_RATE (address D1h) bits and immediate falling edge. 10: Generates Saw-Tooth wave between MARGIN_HIGH (address 25h) code to MARGIN_LOW (address 26h) code, with falling slope defined by SLEW_RATE (address D1h) bits and immediate rising edge. 11: Generates a square wave between MARGIN_HIGH (address 25h) code to MARGIN_LOW (address 26h) code with pulse high and low period defined by SLEW_RATE (address D1h) bits.
13	DEVICE_LOCK	$\overline{W}$	0	0 : Device not locked 1: Device locked, the device locks all the registers. This bit can be reset (unlock device) by writing 0101 to the DEVICE_UNLOCK_CODE bits (address D3h)
12	EN_PMBUS	R/$\overline{W}$	0	0: PMBus mode disabled 1: PMBus mode enabled

Copyright © 2019, Texas Instruments Incorporated

Table 19. GENERAL_CONFIG Register Field Descriptions (continued)

Bit	Field	Type	Reset	Description
11 - 9	CODE_STEP	R/$\overline{W}$	000	Code step for programmable slew rate control. 000: Code step size = 1 LSB (default) 001: Code step size = 2 LSB 010: Code step size = 3 LSB 011: Code step size = 4 LSB 100: Code step size = 6 LSB 101: Code step size = 8 LSB 110: Code step size = 16 LSB 111: Code step size = 32 LSB
8 - 5	SLEW_RATE	R/$\overline{W}$	1111	Slew rate for programmable slew rate control. 0000: 25.6 µs (per step) 0001: 25.6 µs × 1.25 (per step) 0010: 25.6 µs × 1.50 (per step) 0011: 25.6 µs × 1.75 (per step) 0100: 204.8 µs (per step) 0101: 204.8 µs × 1.25 (per step) 0110: 204.8 µs × 1.50 (per step) 0111: 204.8 µs × 1.75 (per step) 1000: 1.6384 ms (per step) 1001: 1.6384 ms × 1.25 (per step) 1010: 1.6384 ms × 1.50 (per step) 1011: 1.6384 ms × 1.75 (per step) 1100: 12 µs (per step) 1101: 8 µs (per step) 1110: 4 µs (per step) 1111: No slew (default)
4 - 3	DAC_PDN	R/$\overline{W}$	10	00: Power up 01: Power down to 10K 10: Power down to high impedance (default) 11: Power down to 10K
2	REF_EN	R/$\overline{W}$	0	0: Internal reference disabled, V_{DD} is DAC reference voltage, DAC output range from 0 to V_{DD}. 1: Internal reference enabled, DAC reference = 1.21 V
1 - 0	DAC_SPAN	R/$\overline{W}$	00	Only applicable when internal reference is enabled. 00: Reference to V_{OUT} gain 1.5X 01: Reference to V_{OUT} gain 2X 10: Reference to V_{OUT} gain 3X 11: Reference to V_{OUT} gain 4X

8.6.3 MED_ALARM_CONFIG Register (address = D2h) (reset = 0000h)

Figure 56. MED_ALARM_CONFIG Register

15 14 13 12 11	10	9	8	7 6	5 4	3 2	1 0
X	MED_ ALARM_ HP	MED_ ALARM_ MP	MED_ ALARM_ LP	RESERVED	MED_ALARM_ DEAD_TIME	PULSE_ OFF_TIME	PULSE_ ON_TIME
X-0h	$\overline{W}$-0h	$\overline{W}$-0h	$\overline{W}$-0h	RESERVED	$\overline{W}$-0h	$\overline{W}$-0h	$\overline{W}$-0h

Table 20. MED_ALARM_CONFIG Register Field Descriptions

Bit	Field	Type	Reset	Description		
15 - 11	X	X	00h	Don't care		
10	MED_ALARM_HP	$\overline{W}$	0	0: No medical alarm waveform generated 1: High priority medical alarm waveform generated		
9	MED_ALARM_MP	$\overline{W}$	0	0: No medical alarm waveform generated 1: Medium priority medical alarm waveform generated		
8	MED_ALARM_LP	$\overline{W}$	0	0: No medical alarm waveform generated 1: Low priority medical alarm waveform generated		
7 - 6	RESERVED	Reserved	0	RESERVED		
5 - 4	INTERBURST_TIME	$\overline{W}$	00	High priority alarm 00: 2.55 sec 01: 2.96 sec 10: 3.38 sec 11: 3.80 sec	Medium priority alarm 00: 2.60 sec 01: 3.06 sec 10: 3.52 sec 11: 4.00 sec	Low priority alarm 00: 16 sec 01: 16 sec 10: 16 sec 11: 16 sec
3 - 2	PULSE_OFF_TIME	$\overline{W}$	00	High priority alarm 00: 15 msec 01: 36 msec 10: 58 msec 11: 80 msec	Medium priority alarm 00: 40 msec 01: 60 msec 10: 80 msec 11: 100 msec	Low priority alarm 00: 40 msec 01: 60 msec 10: 80 msec 11: 100 msec
1 - 0	PULSE_ON_TIME	$\overline{W}$	00	High priority alarm 00: 80 msec 01: 103 msec 10: 126 msec 11: 150 msec	Medium priority alarm 00: 130 msec 01: 153 msec 10: 176 msec 11: 200 msec	Low priority alarm 00: 130 msec 01: 153 msec 10: 176 msec 11: 200 msec

Copyright © 2019, Texas Instruments Incorporated

8.6.4 TRIGGER Register (address = D3h) (reset = 0008h)

Figure 57. TRIGGER Register

15	14	13	12	11	10	9	8	7	6	5	4	3	2	1	0
DEVICE_UNLOCK_CODE				X		DEVICE_ CONFIG_ RESET	START_ FUNC_ GEN	PMBUS_ MARGIN_ HIGH	PMBUS_ MARGIN_ LOW	NVM_ RELOAD	NVM_ PROG	SW_RESET			
$\overline{W}$-0h				X		$\overline{W}$-0h	$\overline{W}$-0h	R/$\overline{W}$-0h	R/$\overline{W}$-0h	$\overline{W}$-0h	$\overline{W}$-0h	$\overline{W}$-8h			

Table 21. TRIGGER Register Field Descriptions

Bit	Field	Type	Reset	Description
15 - 12	DEVICE_UNLOCK_CODE	$\overline{W}$	0000	Write 0101 to unlock the device to bypass DEVICE_LOCK bit.
11 - 10	X	X	0h	Don't care
9	DEVICE_CONFIG_RESET	$\overline{W}$	0	0: Device configuration reset not initiated 1: Device configuration reset initiated. All registers loaded with factory reset values.
8	START_FUNC_GEN	$\overline{W}$	0	0: Continuous waveform generation mode disabled 1: Continuous waveform generation mode enabled, device generates continuous waveform based on FUNC_CONFIG (D1h), MARGIN_LOW (address 18h), and SLEW_RATE (address D1h) bits.
7	PMBUS_MARGIN_HIGH	R/$\overline{W}$	0	0: PMBus margin high command not initiated 1: PMBus margin high command initiated, DAC output margins high to MARGIN_HIGH code (address 25h). This bit automatically resets to 0 after the DAC code reaches MARGIN_HIGH value.
6	PMBUS_MARGIN_LOW	R/$\overline{W}$	0	0: PMBus margin low command not initiated 1: PMBus margin low command initiated, DAC output margins low to MARGIN_LOW code (address 26h). This bit automatically resets to 0 after the DAC code reaches MARGIN_LOW value.
5	NVM_RELOAD	$\overline{W}$	0	0: NVM reload not initiated 1: NVM reload initiated, applicable DAC registers loaded with corresponding NVM. NVM_BUSY bit set to 1 which this operation is in progress.. This is a self-resetting bit.
4	NVM_PROG	$\overline{W}$	0	0: NVM write not initiated 1: NVM write initiated, NVM corresponding to applicable DAC registers loaded with existing register settings. NVM_BUSY bit set to 1 which this operation is in progress. This is a self-resetting bit.
3 - 0	SW_RESET	$\overline{W}$	1000	1000: Software reset not initiated 1010: Software reset initiated, DAC registers loaded with corresponding NVMs, all other registers loaded with default settings.

8.6.5 DAC_DATA Register (address = 21h) (reset = 0000h)

Figure 58. DAC_DATA Register

15	14	13	12	11	10	9	8	7	6	5	4	3	2	1	0
X				DAC_DATA[9:0] / DAC_DATA[7:0] – MSB Left aligned										X	
X-0h				$\overline{W}$-000h										X-0h	

Table 22. DAC_DATA Register Field Descriptions

Bit	Field	Type	Reset	Description
15-12	X	X	0h	Don't care
11-2	DAC_DATA[9:0] / DAC_DATA[7:0]	$\overline{W}$	000h	Writing to the DAC_DATA register forces the respective DAC channel to update the active register data to the DAC_DATA. Data are in straight binary format and use the following format: DAC53401: { DATA[9:0] } DAC43401: { DATA[7:0], X, X } X = Don't care bits
1-0	X	X	0h	Don't care

8.6.6 DAC_MARGIN_HIGH Register (address = 25h) (reset = 0000h)

Figure 59. DAC_MARGIN_HIGH Register

15	14	13	12	11	10	9	8	7	6	5	4	3	2	1	0
X				MARGIN_HIGH[9:0] / MARGIN_HIGH[7:0] – MSB Left aligned										X	
X-0h				$\overline{W}$-000h										X-0h	

Table 23. DAC_MARGIN_HIGH Register Field Descriptions

Bit	Field	Type	Reset	Description
15-12	X	X	0h	Don't care
11-2	MARGIN_HIGH[9:0] / MARGIN_HIGH[7:0] – MSB Left aligned	$\overline{W}$	000h	Margin high code for DAC output. Data are in straight binary format and use the following format: DAC53401: { MARGIN_HIGH[[9:0] } DAC43401: { MARGIN_HIGH[[7:0], X, X } X = Don't care bits
1-0	X	X	0h	Don't care

8.6.7 DAC_MARGIN_LOW Register (address = 26h) (reset = 0000h)

Figure 60. DAC_MARGIN_LOW Register

15	14	13	12	11	10	9	8	7	6	5	4	3	2	1	0
X				MARGIN_LOW[9:0] / MARGIN_LOW[7:0] – MSB Left aligned										X	
X-0h				$\overline{W}$-000h										X-0h	

Table 24. DAC_MARGIN_LOW Register Field Descriptions

Bit	Field	Type	Reset	Description
15-12	X	X	0h	Don't care
11-2	MARGIN_LOW[9:0] / MARGIN_LOW[7:0] – MSB Left aligned	$\overline{W}$	000h	Margin low code for DAC output. Data is in straight binary format and follows the format below: DAC53401: { MARGIN_LOW[[9:0] } DAC43401: { MARGIN_LOW[[7:0], X, X } X = Don't care bits
1-0	X	X	0h	Don't care

Copyright © 2019, Texas Instruments Incorporated

8.6.8 PMBUS_OPERATION Register (address = 01h) (reset = 0000h)

Figure 61. PMBUS_OPERATION Register

15	14	13	12	11	10	9	8	7	6	5	4	3	2	1	0
PMBUS_OPERATION_CMD								X							
R/$\overline{W}$-00h								X-00h							

Table 25. PMBUS_OPERATION Register Field Descriptions

Bit	Field	Type	Reset	Description
15 - 8	PMBUS_OPERATION_CMD	R/$\overline{W}$	00h	PMBus operation commands 00h: Turn off 80h: Turn on A4h: Margin high, DAC output margins high to MARGIN_HIGH code (address 25h) 94h: Margin low, DAC output margins low to MARGIN_LOW code (address 26h)
7 - 0	X	X	00h	Not applicable

8.6.9 PMBUS_STATUS_BYTE Register (address = 78h) (reset = 0000h)

Figure 62. PMBUS_STATUS_BYTE Register

15	14	13	12	11	10	9	8	7	6	5	4	3	2	1	0
X						CML	X								
X-00h						R/$\overline{W}$-0h	X-000h								

Table 26. PMBUS_STATUS_BYTE Register Field Descriptions

Bit	Field	Type	Reset	Description
15 - 10	X	X	00h	Don't care
9	CML	R/$\overline{W}$	0	0: No communication Fault 1: PMBus communication fault for timeout, write with incorrect number of clocks, read before write command, and so more; reset this bit by writing 1.
8 - 0	X	X	000h	Not applicable

8.6.10 PMBUS_VERSION Register (address = 98h) (reset = 2200h)

Figure 63. PMBUS_VERSION Register

15	14	13	12	11	10	9	8	7	6	5	4	3	2	1	0
PMBUS_VERSION								X							
R-22h								X-00h							

Table 27. PMBUS_VERSION Register Field Descriptions

Bit	Field	Type	Reset	Description
15 - 8	PMBUS_VERSION	R	22h	PMBus version
7 - 0	X	X	00h	Not applicable

9 Application and Implementation

NOTE

Information in the following applications sections is not part of the TI component specification, and TI does not warrant its accuracy or completeness. TI's customers are responsible for determining suitability of components for their purposes. Customers should validate and test their design implementation to confirm system functionality.

9.1 Application Information

The DACx3401 are buffered, force-sense output, single-channel, DACs that include an NVM and internal reference and are available in a tiny 3 × 3 package . These DACs are designed for general-purpose applications in a wide range of end equipment. Some of the most common applications for these devices are power-supply margining and control, adaptive voltage scaling (AVS), *set-and-forget* LED biasing in mobile projectors, general-purpose function generation, medical alarm generation, and programmable comparator applications (such as smoke detectors, standalone PWM control loops, and offset and gain trimming in precision circuits).

9.2 Typical Applications

This section explains the design details of three primary applications of DACx3401: programmable LED biasing, power-supply margining. and medical alarm generation.

9.2.1 Programmable LED Biasing

LED and laser biasing or driving circuits often require accuracy and stability of the luminosity with respect to variation in temperature, electrical conditions, and physical characteristics. This accuracy and stability are most effectively achieved using a precision DAC, such as the DACx3401. The DACx3401 have additional features, such as the V_{FB} pin that compensates for the gate-to-source voltage of the transistor (V_{GS}) drop and the drift of the MOSFET. The NVM allows the microprocessor to *set-and-forget* the LED biasing value, even during a power cycle. Figure 64 shows the circuit diagram for LED biasing.

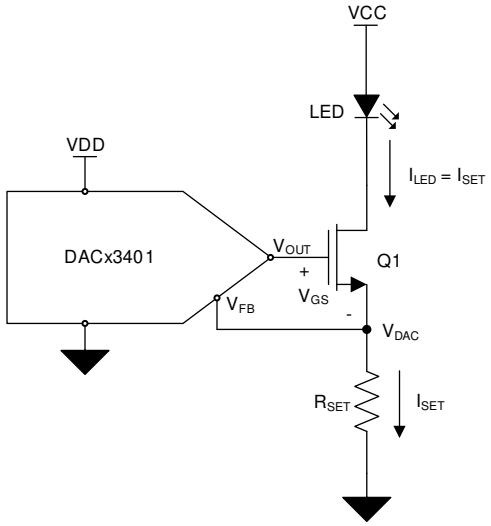

Figure 64. LED Biasing

9.2.1.1 Design Requirements

- DAC output range: 0 V to 2.4 V
- LED current range: 0 mA to 20 mA

Copyright © 2019, Texas Instruments Incorporated

Typical Applications (continued)

9.2.1.2 Detailed Design Procedure

The DAC sets the source current of a MOSFET using the integrated buffer, as shown in Figure 64. Connect the LED between the power supply and the drain of the MOSFET. This configuration allows the DAC to control or set the amount of current through the LED. The integrated buffer controls the gate-source voltage of the MOSFET inside the feedback loop, thus compensating this drop and corresponding drift due to temperature, current, and ageing of the MOSFET. Calculate the value of the LED current set by the DAC using Equation 6. In order to generate 0 mA to 20 mA from a 0-V to 2.4-V DAC output range, the value of R_{SET} resistor is 120-Ω. Select the internal reference with a span of 2x. Given a V_{GS} of 1.2 V, the V_{DD} of the DAC must be at least 3.6 V. Select a V_{DD} of 5 V to allow variation of V_{GS} across temperature. When the V_{DD} headroom is a constraint, use a bipolar junction transistor (BJT) in place of the MOSFET. BJTs have much less V_{BE} drop as compared to a V_{GS} of a MOSFET. A MOSFET provides a much better match between the current through the set register and the LED current, as compared to a BJT.

$$I_{SET} = \frac{V_{DAC}}{R_{SET}} \tag{6}$$

The pseudocode for getting started with an LED biasing application is as follows:

```
//SYNTAX: WRITE <REGISTER NAME (Hex code)>, <MSB DATA>, <LSB DATA>
//Power-up the device, enable internal reference with 2x output span
WRITE GENERAL_CONFIG(0xD1), 0x11, 0xE5
//Write DAC code (12-bit aligned)
WRITE DAC_DATA(0x21), 0x07, 0xFC
//Write settings to the NVM
WRITE TRIGGER(0xD3), 0x00, 0x10
```

9.2.1.3 Application Curves

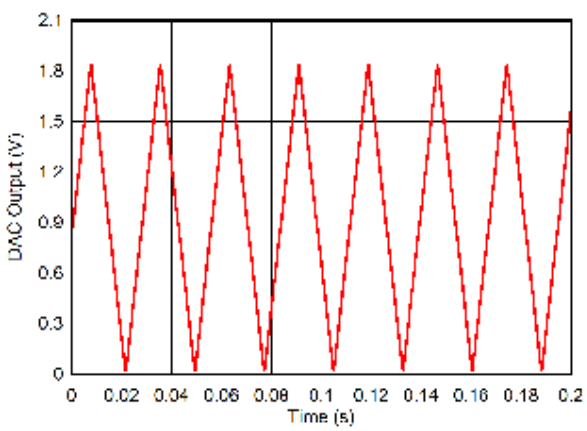

LED breathing effect in triangular pattern

Figure 65. Triangular Waveform

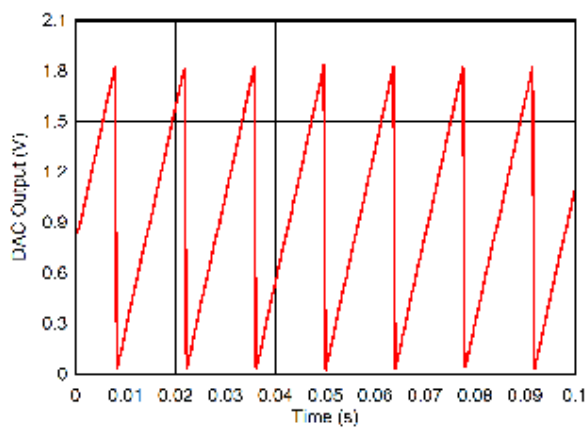

LED breathing effect in sawtooth pattern

Figure 66. Sawtooth Waveform

Typical Applications (continued)

9.2.2 Power-Supply Margining

A power-supply margining circuit is used to test and trim the output of a power converter. This circuit is used to test a system by margining the power supplies, for adaptive voltage scaling, or to program a desired value at the output. Adjustable power supplies, such as LDOs and DC/DC converters provide a feedback or adjust input that is used to set the desired output. A precision voltage-output DAC is the best choice for controlling the power-supply output linearly. Figure 67 shows a control circuit for a switch-mode power supply (SMPS) using DACx3401. Typical applications of power-supply margining are communications equipment, enterprise servers, test and measurement, and general-purpose power-supply modules.

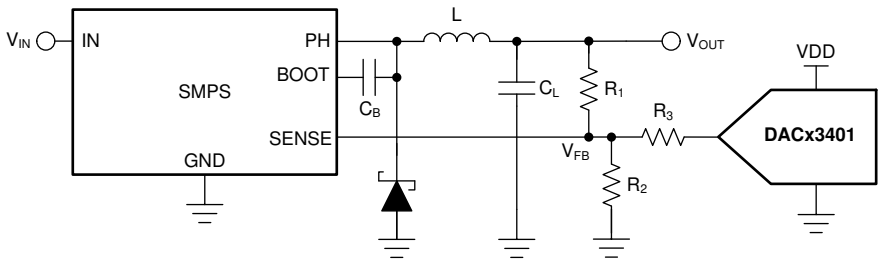

Figure 67. Power-Supply Margining

9.2.2.1 Design Requirements

- Power supply nominal output: 3.3 V
- Reference voltage of the converter (V_{FB}): 0.6 V
- Margin: ±10% (that is, 2.97 V to 3.63 V)
- DAC output range: 1.8 V
- Nominal current through R_1 and R_2: 100 µA

9.2.2.2 Detailed Design Procedure

The DACx3401 features a Hi-Z power-down mode that is set by default at power-up, unless the device is programmed otherwise using the NVM. When the DAC output is at Hi-Z, the current through R_3 is zero and the SMPS is set at the nominal output voltage of 3.3 V. To have the same nominal condition when the DAC powers up, bring up the device at the same output as V_{FB} (that is 0.6 V). This configuration makes sure there is no current through R_3 even at power-up. Calculate R_1 as (V_{OUT} – V_{FB}) / 100 µA = 27 kΩ.

To achieve ±10% margin-high and margin-low conditions, the DAC must sink or source additional current through R_1. Calculate the current from the DAC (I_{MARGIN}) using Equation 7 as 12 µA.

$$I_{MARGIN} = \left(\frac{V_{OUT} \times (1 + MARGIN) - V_{FB}}{R_1} \right) - I_{NOMINAL}$$

where

- I_{MARGIN} is the margin current sourced or sinked from the DAC.
- MARGIN is the percentage margin value divided by 100.
- $I_{NOMINAL}$ is the nominal current through R_1 and R_2. (7)

In order to calculate the value of R_3, first decide the DAC output range, and make sure to avoid the codes near zero-scale and full-scale for safe operation in the linear region. A DAC output of 20 mV is a safe consideration as the minimum output, and (1.8 V – 0.6 V – 20 mV = 1.18 V) as the maximum output. When the DAC output is at 20 mV, the power supply goes to margin high, and when the DAC output is at 1.18 V, the power supply goes to margin low. Calculate the value of R_3 usingEquation 8 as 48.3 kΩ. Choose a standard resistor value and adjust the DAC outputs. Choosing R_3 = 47 kΩ makes the DAC margin high code as 1.164 V and the DAC margin low code as 36 mV.

Copyright © 2019, Texas Instruments Incorporated

Typical Applications (continued)

$$R_3 = \frac{|V_{DAC} - V_{FB}|}{I_{MARGIN}} \tag{8}$$

The DACx3401 have a slew rate feature that is used to toggle between margin high, margin low, and nominal outputs with a defined slew rate. See the GENERAL_CONFIG register description for the slew rate setting details.

NOTE

The MARGIN HIGH register value in DACx3401 results in the MARGIN LOW value at the power supply output. Similarly, the MARGIN LOW register value in DACx3401 results in the MARGIN HIGH value at the power-supply output.

The pseudocode for getting started with a power-supply control application is as follows:

```
//SYNTAX: WRITE <REGISTER NAME (Hex code)>, <MSB DATA>, <LSB DATA>
//Write DAC code (12-bit aligned) for nominal output
//For a 1.8-V output range, the 10-bit hex code for 0.6 V is 0x0155. With 12-
bit alignment, it becomes 0x0554
WRITE DAC_DATA(0x21), 0x05, 0x54
//Write DAC code (12-bit aligned) for margin-low output at the power supply
//For a 1.8-V output range, the 10-bit hex code for 1.164 V is 0x0296. With 12-
bit alignment, it becomes 0x0A58
WRITE DAC_MARGIN_HIGH(0x25), 0x0A, 0x58
//Write DAC code (12-bit aligned) for margin-high output at the power supply
//For a 1.8-V output range, the 10-bit hex code for 36 mV is 0x14. With 12-
bit alignment, it becomes 0x50
WRITE DAC_MARGIN_LOW(0x26), 0x00, 0x50
//Power-
up the device with enable internal reference with 1.5x output span. This will output the nominal
voltage (0.6 V)
//CODE_STEP: 2 LSB, SLEW_RATE: 25.6 µs
WRITE GENERAL_CONFIG(0xD1), 0x12, 0x14
//Trigger margin-low output at the power supply
WRITE TRIGGER(0xD3), 0x00, 0x80
//Trigger margin-high output at the power supply
WRITE TRIGGER(0xD3), 0x00, 0x40
//Write back DAC code (12-bit aligned) for nominal output
WRITE DAC_DATA(0x21), 0x05, 0x54
```

9.2.2.3 Application Curves

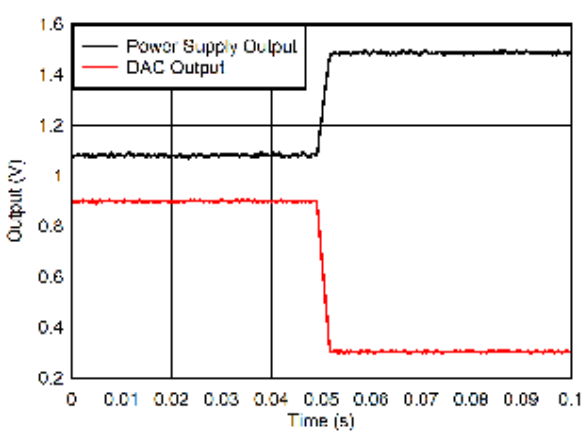

Figure 68. Power-Supply Margin High

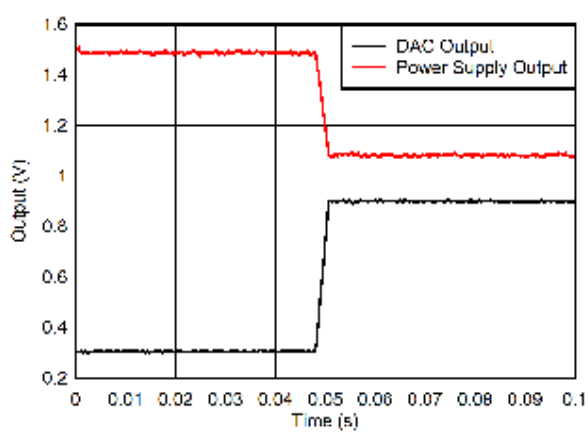

Figure 69. Power Supply Margin Low

Typical Applications (continued)

9.2.3 Medical Alarm Generation

All medical devices implementing an alarm system shall comply to IEC60601-1-8 standard for medical alarms (as per IEC60601-1 Ed 3.1). The regulatory tests are done at a system level; therefore, system level acoustics play a major role in the compliance. A medical alarm is a common functional block in many medical devices. A portable implementation is needed that can also be customized to fit mechanical and audio or acoustic requirements. The DACx3401-based design is aimed at providing a programmable, standalone, and robust implementation at a very low cost.

There are three types of alarms with different timing requirements: low priority, medium priority, and high priority. Usually, for easy identification, different timings are employed for different equipment. Medical device manufacturers prefer using their signature melodies within the limits of the standard.

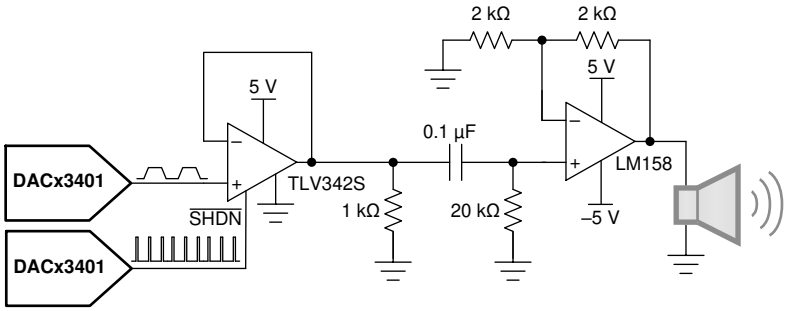

Figure 70. Medical Alarm

9.2.3.1 Design Requirements

- Alarm envelope rise and fall time: 26 ms
- Alarm pulse frequency: 610 Hz

9.2.3.2 Detailed Design Procedure

Two DACx3401 devices are required: one device to generate the pulse envelope and the burst, and the second device to generate the pulse frequency. As shown in Figure 70, mix both these signals together using the TLV342S amplifier with shutdown. Feed the combined signal to a power amplifier, such as the LM158, to drive the speaker. This design provides a gain of 2 at the speaker amplifier. The actual gain required in a system depends on the acoustic output requirements from the speaker. The RC high-pass filter, designed for a cut-off frequency of approximately 80 Hz at the input of LM158, removes the dc component from the signal so that this signal can be applied to the speaker directly. As per the medical alarm standard, the pulse frequency must be above 150 Hz. As a result of the square-wave pulse frequency and the mixing done by TLV342S, the speaker output has multiple harmonics of the fundamental pulse frequency, thus fulfilling the requirement of the medical alarm standard. The DACx3401 provide various options to program the pulse frequency and envelope timings. See the *Medical Alarm Generation Mode* section for the alarm configuration options. Calculate the frequency of a square wave or pulse frequency using Equation 3. The square wave function has a limited number of frequencies because this function is programmed by the SLEW_RATE bit alone. To get a higher number of frequencies, generate a triangular waveform with comparator mode output. Generate the triangular waveform using Equation 4. Set the DAC output in the comparator mode by fixing the V_{FB} pin to the midscale of the DAC using a resistive voltage divider from V_{DD}. Select V_{DD} as the reference in this case using the GENERAL_CONFIG register.

Copyright © 2019, Texas Instruments Incorporated

Typical Applications (continued)

The pseudocode for getting started with a medical alarm application using two DACs is as follows:

```
//SYNTAX: WRITE <REGISTER NAME (Hex code)>, <MSB DATA>, <LSB DATA>
//Power-up the first DAC, enable VDD reference
//SLEW_RATE: 1.6384 ms (Square wave frequency: 610 Hz)
WRITE GENERAL_CONFIG(0xD1), 0xD1, 0x58
//Set MARGIN_HIGH on the first DAC
WRITE DAC_MARGIN_HIGH(0x25), 0x0F, 0xFC
//Set MARGIN_LOW on the first DAC
WRITE DAC_MARGIN_LOW(0x26), 0x00, 0x00
//Trigger square wave generation on the first DAC
WRITE TRIGGER(0xD3), 0x01, 0x00
//Power-up the second DAC, enable VDD reference
//CODE_STEP: 8 LSB, SLEW_RATE: 204.8 µs x 1.75 = 358.4 µs (Envelope rise/fall times for full-
scale: ~26 ms)
WRITE GENERAL_CONFIG(0xD1), 0x1A, 0xE8
//OPTION-1: Configure the second DAC for low-priority alarm with minimum time settings and trigger
WRITE MED_ALARM_CONFIG(0xD2), 0x01, 0x00
//OPTION-2: Configure the second DAC for medium-priority alarm with minimum time settings and trigger
WRITE MED_ALARM_CONFIG(0xD2), 0x02, 0x00
//OPTION-3: Configure the second DAC for high-priority alarm with minimum time settings and trigger
WRITE MED_ALARM_CONFIG(0xD2), 0x04, 0x00
//Set MARGIN_HIGH on the second DAC
WRITE DAC_MARGIN_HIGH(0x25), 0x0F, 0xFC
//Set MARGIN_LOW on the second DAC
WRITE DAC_MARGIN_LOW(0x26), 0x00, 0x00
```

9.2.3.3 Application Curves

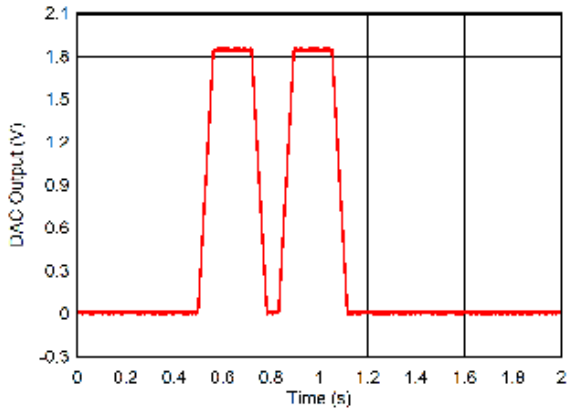

Figure 71. Low Priority Alarm

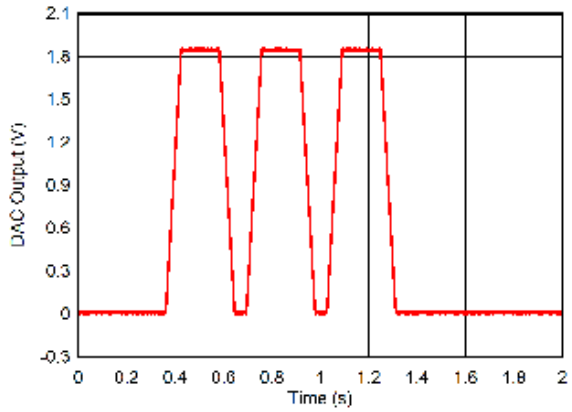

Figure 72. Medium Priority Alarm

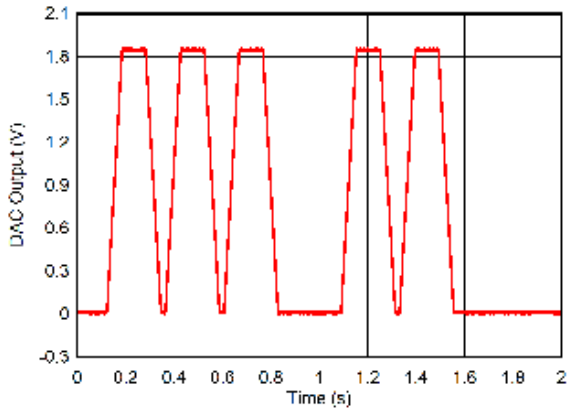

Figure 73. High-Priority Alarm

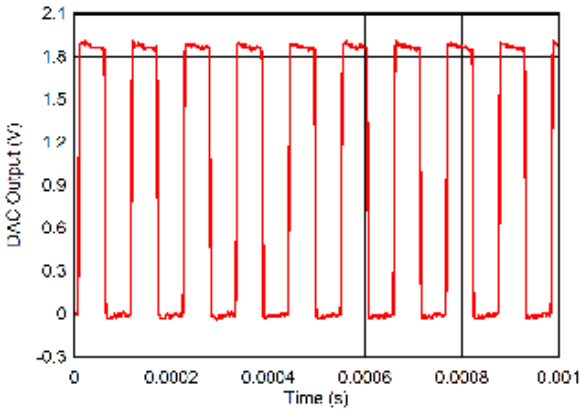

Figure 74. Pulse Frequency

10 Power Supply Recommendations

The DACx3401 family of devices does not require specific supply sequencing. These devices require a single power supply, V_{DD}. Use a 0.1-µF decoupling capacitor for the V_{DD} pin. Use a bypass capacitor with a value greater than 1.5-µF for the CAP pin.

11 Layout

11.1 Layout Guidelines

The DACx3401 pin configuration separates the analog, digital, and power pins for an optimized layout. For signal integrity, separate the digital and analog traces, and place decoupling capacitors close to the device pins.

11.2 Layout Example

Figure 75 shows an example layout drawing with decoupling capacitors and pullup resistors.

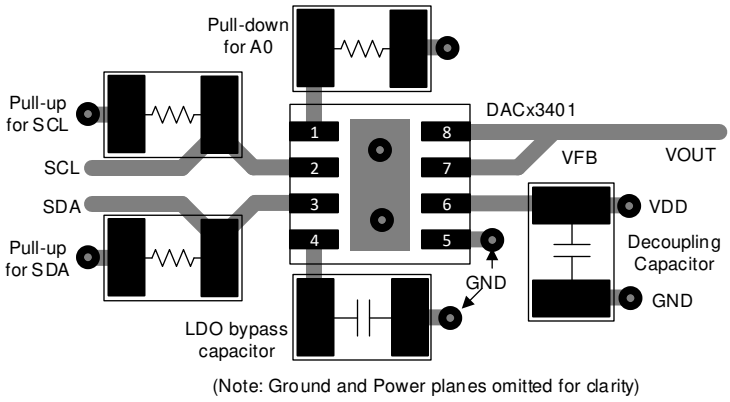

Figure 75. Layout Example

Copyright © 2019, Texas Instruments Incorporated

12 Device and Documentation Support

12.1 Documentation Support

12.1.1 Related Documentation

For related documentation see the following:

Texas, Instruments *DAC53401EVM* user's guide

12.2 Related Links

Table 28 lists quick access links. Categories include technical documents, support and community resources, tools and software, and quick access to order now.

Table 28. Related Links

PARTS	PRODUCT FOLDER	ORDER NOW	TECHNICAL DOCUMENTS	TOOLS & SOFTWARE	SUPPORT & COMMUNITY
DAC53401	Click here	Click here	Click here	Click here	Click here
DAC43401	Click here	Click here	Click here	Click here	Click here

12.3 Receiving Notification of Documentation Updates

To receive notification of documentation updates, navigate to the device product folder on ti.com. In the upper right corner, click on *Alert me* to register and receive a weekly digest of any product information that has changed. For change details, review the revision history included in any revised document.

12.4 Support Resources

TI E2E™ support forums are an engineer's go-to source for fast, verified answers and design help — straight from the experts. Search existing answers or ask your own question to get the quick design help you need.

Linked content is provided "AS IS" by the respective contributors. They do not constitute TI specifications and do not necessarily reflect TI's views; see TI's Terms of Use.

12.5 Trademarks

E2E is a trademark of Texas Instruments.
PMBus is a trademark of SMIF, Inc.
All other trademarks are the property of their respective owners.

12.6 Electrostatic Discharge Caution

This integrated circuit can be damaged by ESD. Texas Instruments recommends that all integrated circuits be handled with appropriate precautions. Failure to observe proper handling and installation procedures can cause damage.

ESD damage can range from subtle performance degradation to complete device failure. Precision integrated circuits may be more susceptible to damage because very small parametric changes could cause the device not to meet its published specifications.

12.7 Glossary

SLYZ022 — *TI Glossary*.

This glossary lists and explains terms, acronyms, and definitions.

13 Mechanical, Packaging, and Orderable Information

The following pages include mechanical, packaging, and orderable information. This information is the most current data available for the designated devices. This data is subject to change without notice and revision of this document. For browser-based versions of this data sheet, refer to the left-hand navigation.

PACKAGING INFORMATION

Orderable part number	Status (1)	Material type (2)	Package | Pins	Package qty | Carrier	RoHS (3)	Lead finish/ Ball material (4)	MSL rating/ Peak reflow (5)	Op temp (°C)	Part marking (6)
DAC43401DSGR	Active	Production	WSON (DSG) | 8	3000 | LARGE T&R	Yes	NIPDAU	Level-1-260C-UNLIM	-40 to 125	4341
DAC43401DSGR.A	Active	Production	WSON (DSG) | 8	3000 | LARGE T&R	Yes	NIPDAU	Level-1-260C-UNLIM	-40 to 125	4341
DAC43401DSGRG4	Active	Production	WSON (DSG) | 8	3000 | LARGE T&R	Yes	NIPDAU	Level-1-260C-UNLIM	-40 to 125	4341
DAC43401DSGRG4.A	Active	Production	WSON (DSG) | 8	3000 | LARGE T&R	Yes	NIPDAU	Level-1-260C-UNLIM	-40 to 125	4341
DAC43401DSGT	Active	Production	WSON (DSG) | 8	250 | SMALL T&R	Yes	SN	Level-1-260C-UNLIM	-40 to 125	4341
DAC43401DSGT.A	Active	Production	WSON (DSG) | 8	250 | SMALL T&R	Yes	SN	Level-1-260C-UNLIM	-40 to 125	4341
DAC53401DSGR	Active	Production	WSON (DSG) | 8	3000 | LARGE T&R	Yes	NIPDAU	Level-1-260C-UNLIM	-40 to 125	5341
DAC53401DSGR.A	Active	Production	WSON (DSG) | 8	3000 | LARGE T&R	Yes	NIPDAU	Level-1-260C-UNLIM	-40 to 125	5341
DAC53401DSGRG4	Active	Production	WSON (DSG) | 8	3000 | LARGE T&R	Yes	NIPDAU	Level-1-260C-UNLIM	-40 to 125	5341
DAC53401DSGRG4.A	Active	Production	WSON (DSG) | 8	3000 | LARGE T&R	Yes	NIPDAU	Level-1-260C-UNLIM	-40 to 125	5341
DAC53401DSGT	Active	Production	WSON (DSG) | 8	250 | SMALL T&R	Yes	NIPDAU	Level-1-260C-UNLIM	-40 to 125	5341
DAC53401DSGT.A	Active	Production	WSON (DSG) | 8	250 | SMALL T&R	Yes	NIPDAU	Level-1-260C-UNLIM	-40 to 125	5341

(1) **Status:** For more details on status, see our product life cycle.

(2) **Material type:** When designated, preproduction parts are prototypes/experimental devices, and are not yet approved or released for full production. Testing and final process, including without limitation quality assurance, reliability performance testing, and/or process qualification, may not yet be complete, and this item is subject to further changes or possible discontinuation. If available for ordering, purchases will be subject to an additional waiver at checkout, and are intended for early internal evaluation purposes only. These items are sold without warranties of any kind.

(3) **RoHS values:** Yes, No, RoHS Exempt. See the TI RoHS Statement for additional information and value definition.

(4) **Lead finish/Ball material:** Parts may have multiple material finish options. Finish options are separated by a vertical ruled line. Lead finish/Ball material values may wrap to two lines if the finish value exceeds the maximum column width.

(5) **MSL rating/Peak reflow:** The moisture sensitivity level ratings and peak solder (reflow) temperatures. In the event that a part has multiple moisture sensitivity ratings, only the lowest level per JEDEC standards is shown. Refer to the shipping label for the actual reflow temperature that will be used to mount the part to the printed circuit board.

(6) **Part marking:** There may be an additional marking, which relates to the logo, the lot trace code information, or the environmental category of the part.

Multiple part markings will be inside parentheses. Only one part marking contained in parentheses and separated by a "~" will appear on a part. If a line is indented then it is a continuation of the previous line and the two combined represent the entire part marking for that device.

Important Information and Disclaimer: The information provided on this page represents TI's knowledge and belief as of the date that it is provided. TI bases its knowledge and belief on information provided by third parties, and makes no representation or warranty as to the accuracy of such information. Efforts are underway to better integrate information from third parties. TI has taken and continues to take reasonable steps to provide representative and accurate information but may not have conducted destructive testing or chemical analysis on incoming materials and chemicals. TI and TI suppliers consider certain information to be proprietary, and thus CAS numbers and other limited information may not be available for release.

In no event shall TI's liability arising out of such information exceed the total purchase price of the TI part(s) at issue in this document sold by TI to Customer on an annual basis.

OTHER QUALIFIED VERSIONS OF DAC43401, DAC53401 :

- Automotive : DAC43401-Q1, DAC53401-Q1

NOTE: Qualified Version Definitions:

- Automotive - Q100 devices qualified for high-reliability automotive applications targeting zero defects

TAPE AND REEL INFORMATION

REEL DIMENSIONS

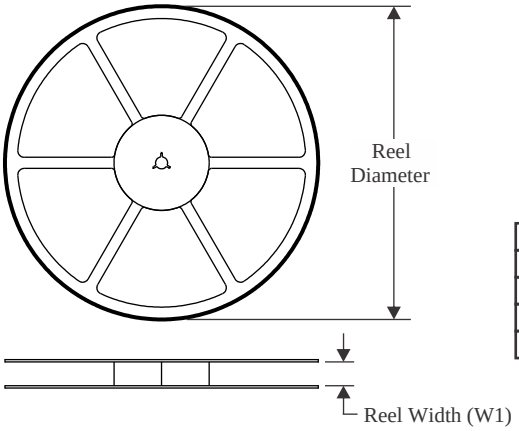

TAPE DIMENSIONS

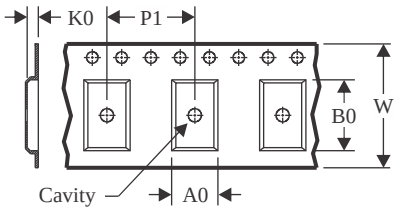

A0	Dimension designed to accommodate the component width
B0	Dimension designed to accommodate the component length
K0	Dimension designed to accommodate the component thickness
W	Overall width of the carrier tape
P1	Pitch between successive cavity centers

QUADRANT ASSIGNMENTS FOR PIN 1 ORIENTATION IN TAPE

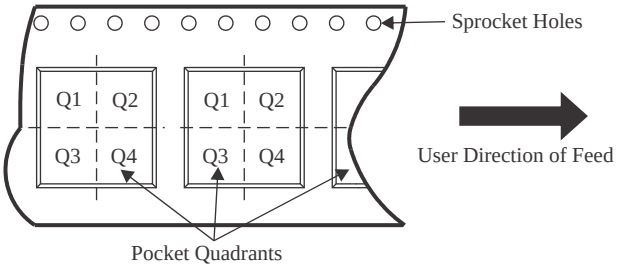

*All dimensions are nominal

Device	Package Type	Package Drawing	Pins	SPQ	Reel Diameter (mm)	Reel Width W1 (mm)	A0 (mm)	B0 (mm)	K0 (mm)	P1 (mm)	W (mm)	Pin1 Quadrant
DAC43401DSGR	WSON	DSG	8	3000	180.0	8.4	2.3	2.3	1.15	4.0	8.0	Q2
DAC43401DSGRG4	WSON	DSG	8	3000	180.0	8.4	2.3	2.3	1.15	4.0	8.0	Q2
DAC43401DSGT	WSON	DSG	8	250	180.0	8.4	2.3	2.3	1.15	4.0	8.0	Q2
DAC53401DSGR	WSON	DSG	8	3000	180.0	8.4	2.3	2.3	1.15	4.0	8.0	Q2
DAC53401DSGRG4	WSON	DSG	8	3000	180.0	8.4	2.3	2.3	1.15	4.0	8.0	Q2
DAC53401DSGT	WSON	DSG	8	250	180.0	8.4	2.3	2.3	1.15	4.0	8.0	Q2

TAPE AND REEL BOX DIMENSIONS

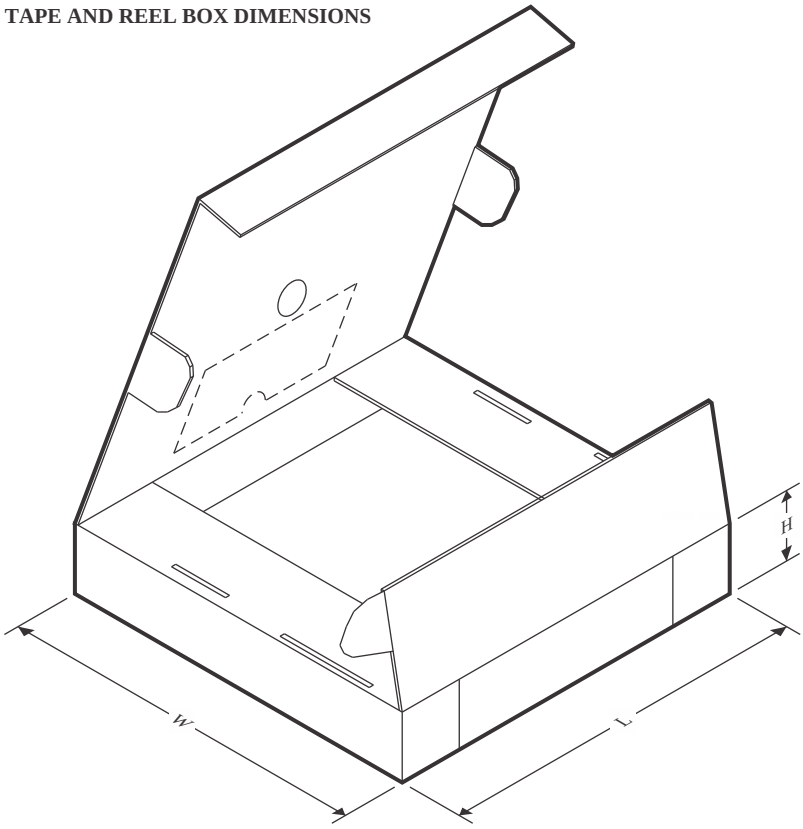

*All dimensions are nominal

Device	Package Type	Package Drawing	Pins	SPQ	Length (mm)	Width (mm)	Height (mm)
DAC43401DSGR	WSON	DSG	8	3000	210.0	185.0	35.0
DAC43401DSGRG4	WSON	DSG	8	3000	210.0	185.0	35.0
DAC43401DSGT	WSON	DSG	8	250	210.0	185.0	35.0
DAC53401DSGR	WSON	DSG	8	3000	210.0	185.0	35.0
DAC53401DSGRG4	WSON	DSG	8	3000	210.0	185.0	35.0
DAC53401DSGT	WSON	DSG	8	250	210.0	185.0	35.0

GENERIC PACKAGE VIEW

DSG 8

WSON - 0.8 mm max height

2 x 2, 0.5 mm pitch

PLASTIC SMALL OUTLINE - NO LEAD

This image is a representation of the package family, actual package may vary.
Refer to the product data sheet for package details.

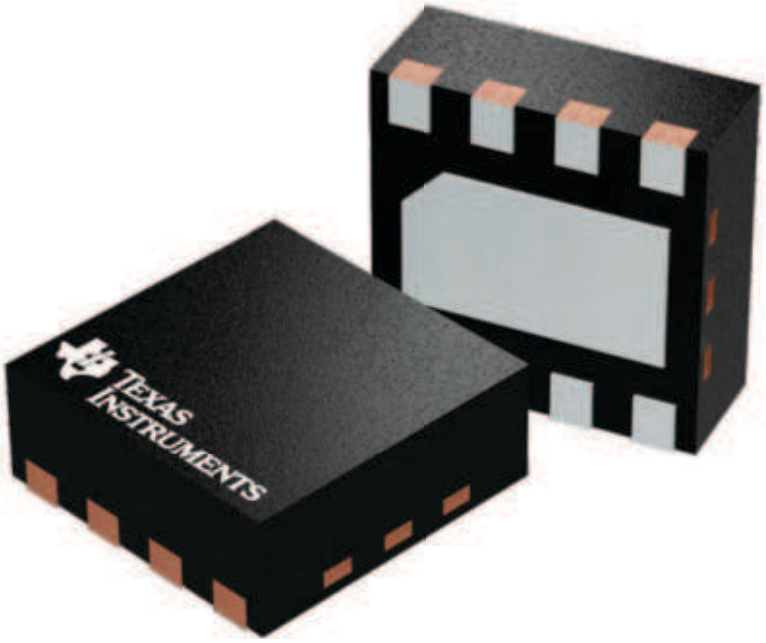

4224783/A

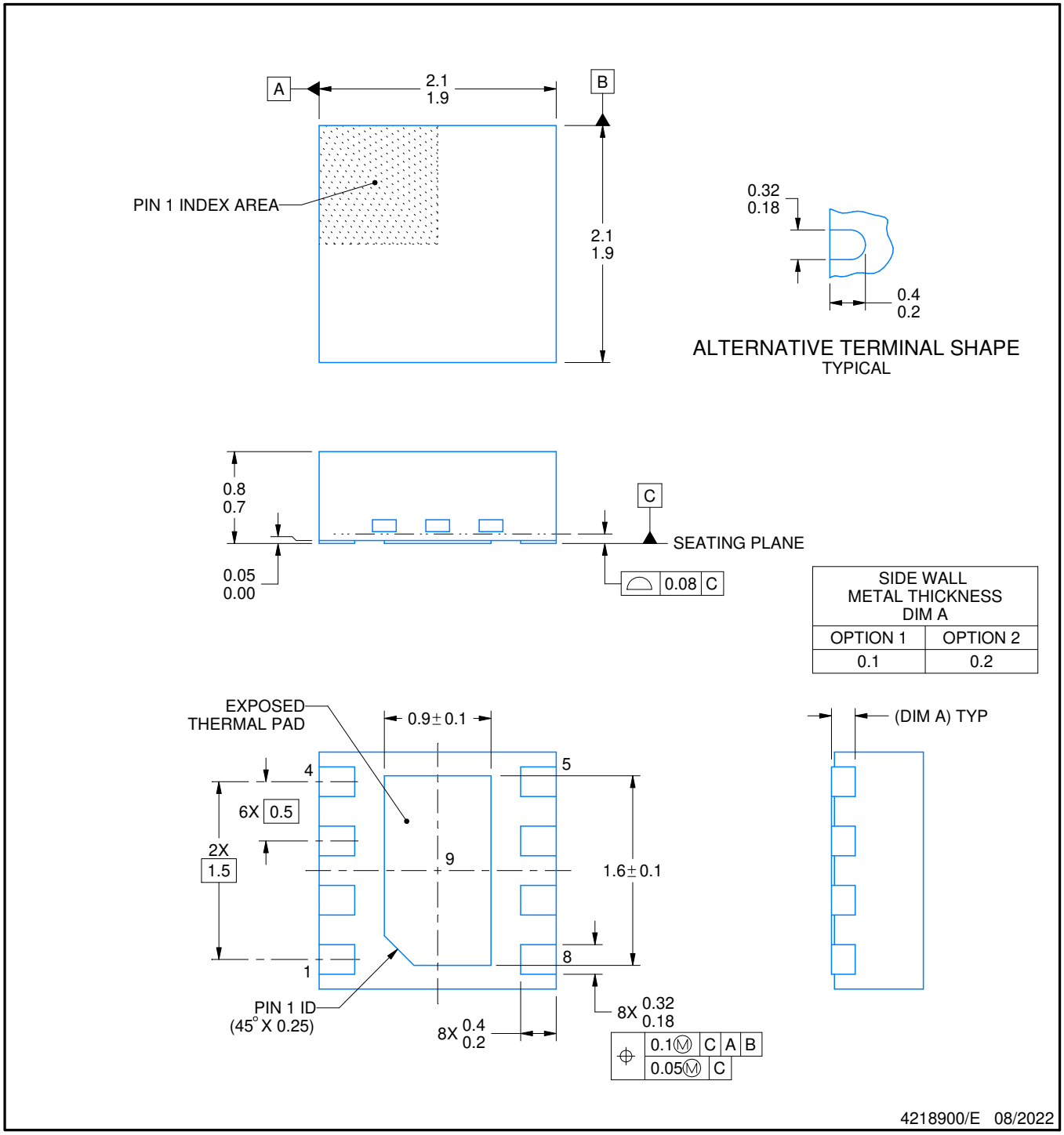

NOTES:

1. All linear dimensions are in millimeters. Any dimensions in parenthesis are for reference only. Dimensioning and tolerancing per ASME Y14.5M.
2. This drawing is subject to change without notice.
3. The package thermal pad must be soldered to the printed circuit board for thermal and mechanical performance.

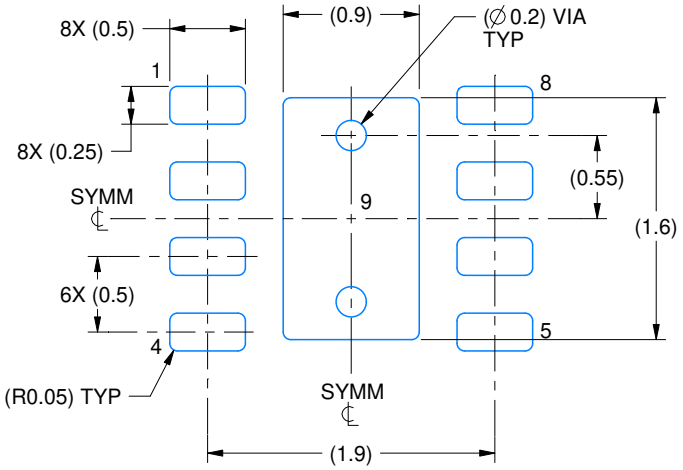

LAND PATTERN EXAMPLE
SCALE:20X

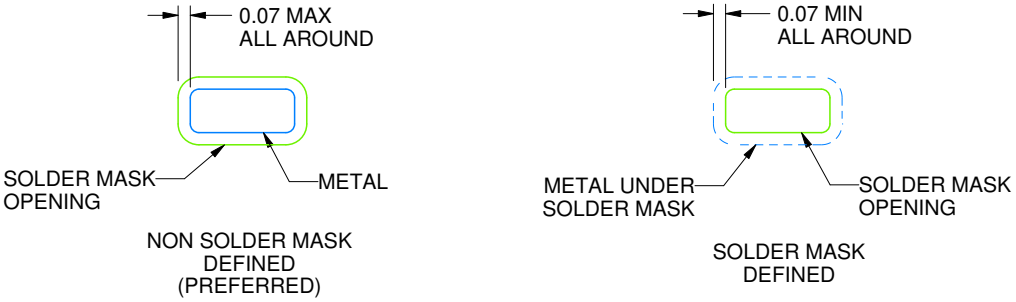

SOLDER MASK DETAILS

4218900/E 08/2022

NOTES: (continued)

4. This package is designed to be soldered to a thermal pad on the board. For more information, see Texas Instruments literature number SLUA271 (www.ti.com/lit/slua271).
5. Vias are optional depending on application, refer to device data sheet. If any vias are implemented, refer to their locations shown on this view. It is recommended that vias under paste be filled, plugged or tented.

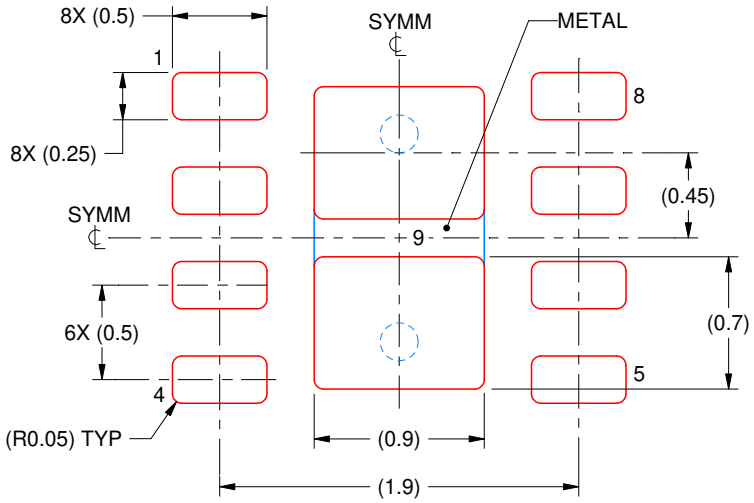

SOLDER PASTE EXAMPLE
BASED ON 0.125 mm THICK STENCIL

EXPOSED PAD 9:
87% PRINTED SOLDER COVERAGE BY AREA UNDER PACKAGE
SCALE:25X

4218900/E 08/2022

NOTES: (continued)

6. Laser cutting apertures with trapezoidal walls and rounded corners may offer better paste release. IPC-7525 may have alternate design recommendations.

IMPORTANT NOTICE AND DISCLAIMER

TI PROVIDES TECHNICAL AND RELIABILITY DATA (INCLUDING DATASHEETS), DESIGN RESOURCES (INCLUDING REFERENCE DESIGNS), APPLICATION OR OTHER DESIGN ADVICE, WEB TOOLS, SAFETY INFORMATION, AND OTHER RESOURCES “AS IS” AND WITH ALL FAULTS, AND DISCLAIMS ALL WARRANTIES, EXPRESS AND IMPLIED, INCLUDING WITHOUT LIMITATION ANY IMPLIED WARRANTIES OF MERCHANTABILITY, FITNESS FOR A PARTICULAR PURPOSE OR NON-INFRINGEMENT OF THIRD PARTY INTELLECTUAL PROPERTY RIGHTS.

These resources are intended for skilled developers designing with TI products. You are solely responsible for (1) selecting the appropriate TI products for your application, (2) designing, validating and testing your application, and (3) ensuring your application meets applicable standards, and any other safety, security, regulatory or other requirements.

These resources are subject to change without notice. TI grants you permission to use these resources only for development of an application that uses the TI products described in the resource. Other reproduction and display of these resources is prohibited. No license is granted to any other TI intellectual property right or to any third party intellectual property right. TI disclaims responsibility for, and you fully indemnify TI and its representatives against any claims, damages, costs, losses, and liabilities arising out of your use of these resources.

TI’s products are provided subject to TI’s Terms of Sale, TI’s General Quality Guidelines, or other applicable terms available either on ti.com or provided in conjunction with such TI products. TI’s provision of these resources does not expand or otherwise alter TI’s applicable warranties or warranty disclaimers for TI products. Unless TI explicitly designates a product as custom or customer-specified, TI products are standard, catalog, general purpose devices.

TI objects to and rejects any additional or different terms you may propose.

Copyright © 2026, Texas Instruments Incorporated

Last updated 10/2025