DAC8560 16-Bit, Ultra-Low Glitch, Voltage Output Digital-to-Analog Converter With 2.5-V, 2-ppm/°C Internal Reference

1 Features

- Relative Accuracy: 4 LSB
- Glitch Energy: 0.15 nV-s
- *Micro*Power Operation: 510 µA at 2.7 V
- Internal Reference:
  - 2.5-V Reference Voltage (Enabled by Default)
  - 0.02% Initial Accuracy
  - 2-ppm/°C Temperature Drift (Typical)
  - 5-ppm/°C Temperature Drift (Maximum)
  - 20-mA Sink/Source Capability
- Power-On Reset to Zero
- Power Supply: 2.7 V to 5.5 V
- 16-Bit Monotonic Over Temperature Range
- Settling Time: 10 µs to ±0.003% FSR
- Low-Power Serial Interface With Schmitt-Triggered Inputs
- On-Chip Output Buffer Amplifier With Rail-to-Rail Operation
- Power-Down Capability
- Drop-In Compatible With DAC8531/01 and DAC8550 /51
- Temperature Range: –40°C to +105°C
- Available in a Tiny 8-Pin VSSOP Package

2 Applications

- Process Control
- Data Acquisition Systems
- Closed-Loop Servo-Control
- PC Peripherals
- Portable Instrumentation

3 Description

The DAC8560 is a low-power, voltage output, 16-bit digital-to-analog converter (DAC). The DAC8560 includes a 2.5-V, 2-ppm/°C internal reference (enabled by default), giving a full-scale output voltage range of 0 V to 2.5 V. The internal reference has an initial accuracy of 0.02% and can source up to 20 mA at the V_{REF} pin. The device is monotonic, provides very good linearity, and minimizes undesired code-to-code transient voltages (glitch). The DAC8560 uses a versatile 3-wire serial interface that operates at clock rates up to 30 MHz. It is compatible with standard SPI, QSPI, Microwire, and digital-signal-processor (DSP) interfaces.

The DAC8560 incorporates a power-on-reset (POR) circuit that ensures the DAC output powers up at zero scale and remains there until a valid code is written to the device. The DAC8560 contains a power-down feature, accessed over the serial interface, that reduces the current consumption of the device to 1.2 µA at 5 V.

The low-power consumption, internal reference, and small footprint make this device ideal for portable, battery-operated equipment. The power consumption is 2.6 mW at 5 V, reducing to 6 µW in power-down mode.

The DAC8560 is available in an 8-pin VSSOP package.

Device Information(1)

PART NUMBER	PACKAGE	BODY SIZE (NOM)
DAC8560	VSSOP (8)	3.00 mm × 3.00 mm

(1) For all available packages, see the orderable addendum at the end of the data sheet.

Functional Block Diagram

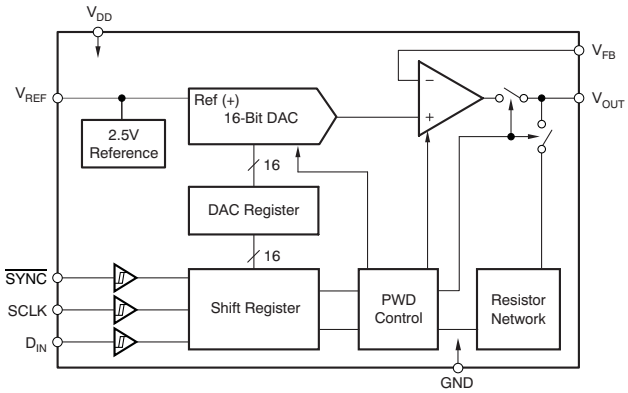

An IMPORTANT NOTICE at the end of this data sheet addresses availability, warranty, changes, use in safety-critical applications, intellectual property matters and other important disclaimers. PRODUCTION DATA.

Table of Contents

1 **Features** ... 1
2 **Applications** ... 1
3 **Description** ... 1
4 **Revision History** ... 2
5 **Pin Configuration and Functions** ... 3
6 **Specifications** ... 4
6.1 Absolute Maximum Ratings ... 4
6.2 ESD Ratings ... 4
6.3 Recommended Operating Conditions ... 4
6.4 Thermal Information ... 4
6.5 Electrical Characteristics ... 5
6.6 Timing Requirements ... 7
6.7 Typical Characteristics: Internal Reference ... 8
6.8 Typical Characteristics: DAC at V_{DD} = 5 V ... 10
6.9 Typical Characteristics: DAC at V_{DD} = 3.6 V ... 15
6.10 Typical Characteristics: DAC at V_{DD} = 2.7 V ... 15
7 **Detailed Description** ... 19
7.1 Overview ... 19
7.2 Functional Block Diagram ... 19
7.3 Feature Description ... 19
7.4 Device Functional Modes ... 24
7.5 Programming ... 25
7.6 Register Maps ... 26
8 **Application and Implementation** ... 27
8.1 Application Information ... 27
8.2 Typical Applications ... 27
9 **Power Supply Recommendations** ... 32
10 **Layout** ... 32
10.1 Layout Guidelines ... 32
10.2 Layout Example ... 32
11 **Device and Documentation Support** ... 33
11.1 Documentation Support ... 33
11.2 Receiving Notification of Documentation Updates 33
11.3 Community Resource ... 33
11.4 Trademarks ... 33
11.5 Electrostatic Discharge Caution ... 33
11.6 Glossary ... 33
12 **Mechanical, Packaging, and Orderable Information** ... 33

4 Revision History

NOTE: Page numbers for previous revisions may differ from page numbers in the current version.

Changes from Revision B (November 2011) to Revision C	Page
• Added topnav link for TI Designs, *Device Information*, *ESD Ratings*, *Recommended Operating Conditions*, and *Thermal Information* tables, *Feature Description* section, *Device Functional Modes*, *Application and Implementation* section, *Power Supply Recommendations* section, *Layout* section, *Device and Documentation Support* section, and *Mechanical, Packaging, and Orderable Information* section	1

Changes from Revision A (November 2011) to Revision B	Page
• Changed Revision date from A, May 2011 to B, November 2011	1
• Changed "Zero-code error drift" in the ELEC CHARA table, TYP from ±20 to ±4	5

Changes from Original (December 2006) to Revision A	Page
• Changed Output Voltage parameter min/max values from 2.4995 and 2.5005 to 2.4975 and 2.5025, respectively	6
• Changed Initial Accuracy parameter min/max values from –0.02 and 0.02 to –0.1 and 0.1, respectively	6

Changes from Revision A (May 2011) to Revision B	Page
• Changed Revision date from A, May 2011 to B, November 2011	1
• Changed "Zero-code error drift" in the ELEC CHARA table, TYP from ±20 to ±4	5

Copyright © 2006–2018, Texas Instruments Incorporated

5 Pin Configuration and Functions

DGK Package
8-Pin VSSOP
Top View

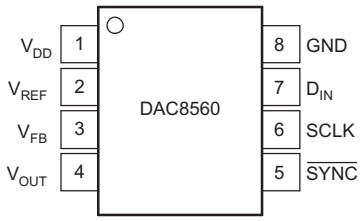

Pin Functions

PIN		I/O	DESCRIPTION
NO.	NAME		
1	V_{DD}	PWR	Power supply input, 2.7 V to 5.5 V
2	V_{REF}	I/O	Reference voltage input/output
3	V_{FB}	I	Feedback connection for the output amplifier. For voltage output operation, tie to V_{OUT} externally.
4	V_{OUT}	O	Analog output voltage from DAC. The output amplifier has rail-to-rail operation.
5	$\overline{SYNC}$	I	Level-triggered control input (active LOW). This is the frame synchronization signal for the input data. When $\overline{SYNC}$ goes LOW, it enables the input shift register, and data is sampled on subsequent falling clock edges. The DAC output updates following the 24th clock. If $\overline{SYNC}$ is taken HIGH before the 24th clock edge, the rising edge of $\overline{SYNC}$ acts as an interrupt, and the write sequence is ignored by the DAC8560. Schmitt-Trigger logic input.
6	SCLK	I	Serial clock input, Schmitt-Trigger logic input.
7	D_{IN}	I	Serial data input. Data is clocked into the 24-bit input shift register on each falling edge of the serial clock input. Schmitt-Trigger logic input.
8	GND	GND	Ground reference point for all circuitry on the device.

Copyright © 2006–2018, Texas Instruments Incorporated

6 Specifications

6.1 Absolute Maximum Ratings

over operating free-air temperature range (unless otherwise noted)[1]

	MIN	MAX	UNIT
V_{DD} to GND	–0.3	6	V
Digital input voltage to GND	–0.3	V_{DD} + 0.3	V
V_{OUT} to GND	–0.3	V_{DD} + 0.3	V
Power dissipation (DGK)		$(T_{J(MAX)} – T_A) / R_{\theta JA}$	
Operating temperature	–40	105	°C
Junction temperature, $T_{J(MAX)}$		150	°C
Storage temperature, T_{stg}	–65	150	°C

(1) Stresses beyond those listed under *Absolute Maximum Ratings* may cause permanent damage to the device. These are stress ratings only, which do not imply functional operation of the device at these or any other conditions beyond those indicated under *Recommended Operating Conditions*. Exposure to absolute-maximum-rated conditions for extended periods may affect device reliability.

6.2 ESD Ratings

		VALUE	UNIT
$V_{(ESD)}$ Electrostatic discharge	Human-body model (HBM), per ANSI/ESDA/JEDEC JS-001[1]	±4000	V
	Charged-device model (CDM), per JEDEC specification JESD22-C101[2]	±1500	

(1) JEDEC document JEP155 states that 500-V HBM allows safe manufacturing with a standard ESD control process.
(2) JEDEC document JEP157 states that 250-V CDM allows safe manufacturing with a standard ESD control process.

6.3 Recommended Operating Conditions

over operating free-air temperature range (unless otherwise noted)

		MIN	NOM	MAX	UNIT
V_{DD}	Supply voltage (V_{DD} to GND)	2.7		5.5	V
	Digital input voltage (D_{IN}, SCLK, and $\overline{SYNC}$)	0		V_{DD}	V
V_{FB}	Output amplifier feedback input		V_{OUT}		V
T_A	Operating ambient temperature	–40		125	°C

6.4 Thermal Information

THERMAL METRIC[1]		DAC8560 DGK (VSSOP) 8 PINS	UNIT
$R_{\theta JA}$	Junction-to-ambient thermal resistance	206	°C/W
$R_{\theta JC(top)}$	Junction-to-case (top) thermal resistance	44	°C/W
$R_{\theta JB}$	Junction-to-board thermal resistance	94.2	°C/W
ψ_{JT}	Junction-to-top characterization parameter	10.2	°C/W
ψ_{JB}	Junction-to-board characterization parameter	92.7	°C/W

(1) For more information about traditional and new thermal metrics, see the *Semiconductor and IC Package Thermal Metrics* application report.

Copyright © 2006–2018, Texas Instruments Incorporated

6.5 Electrical Characteristics

V_{DD} = 2.7 V to 5.5 V, –40°C to +105°C range (unless otherwise noted)

PARAMETER	TEST CONDITIONS		MIN	TYP	MAX	UNIT
STATIC PERFORMANCE (1)						
Resolution			16			Bits
Relative accuracy	Measured by line passing through codes 485 and 64714	DAC8560A, DAC8560C		±4	±12	LSB
		DAC8560B, DAC8560D		±4	±8	LSB
Differential nonlinearity	16-bit Monotonic			±0.5	±1	LSB
Zero-code error	Measured by line passing through codes 485 and 64714.			±5	±12	mV
Full-scale error				±0.2	±0.5	% of FSR
Gain error				±0.05	±0.2	% of FSR
Zero-code error drift				±4		µV/°C
Gain temperature coefficient	V_{DD} = 5 V			±1		ppm of FSR/°C
	V_{DD} = 2.7 V			±3		
PSRR	Power supply rejection ratio	Output unloaded		1		mV/V
OUTPUT CHARACTERISTICS (2)						
Output voltage range			0		V_{REF}	V
Output voltage settling time	To ±0.003% FSR, 0200h to FD00h, R_L = 2 kΩ, 0 pF < C_L < 200 pF			8	10	µs
	R_L = 2 kΩ, C_L = 500 pF			12		
Slew rate				1.8		V/µs
Capacitive load stability	R_L = ∞			470		pF
	R_L = 2 kΩ			1000		
Code change glitch impulse	1 LSB change around major carry			0.15		nV-s
Digital feedthrough	SCLK toggling, $\overline{SYNC}$ high			0.15		nV-s
DC output impedance	At mid-code input			1		Ω
Short-circuit current	V_{DD} = 5 V			50		mA
	V_{DD} = 3 V			20		
Power-up time	Coming out of power-down mode V_{DD} = 5 V			2.5		µs
	Coming out of power-down mode V_{DD} = 3 V			5		
AC PERFORMANCE (2)						
SNR	T_A = 25°C, BW = 20 kHz, V_{DD} = 5 V, f_{OUT} = 1 kHz, 1st 19 harmonics removed for SNR calculation			88		dB
THD				–77		dB
SFDR				79		dB
SINAD				77		dB
DAC output noise density	T_A = 25°C, at mid-code input, f_{OUT} = 1 kHz			170		nV/√Hz
DAC output noise	T_A = 25°C, at mid-code input, 0.1 Hz to 10 Hz			50		$µV_{PP}$

(1) Linearity calculated using a reduced code range of 485 to 64714; output unloaded.
(2) Ensured by design and characterization, not production tested.

Copyright © 2006–2018, Texas Instruments Incorporated

Electrical Characteristics (continued)

V_{DD} = 2.7 V to 5.5 V, –40°C to +105°C range (unless otherwise noted)

PARAMETER		TEST CONDITIONS	MIN	TYP	MAX	UNIT
REFERENCE OUTPUT						
Output voltage		T_A = 25°C	2.4975	2.5	2.5025	V
Initial accuracy		T_A = 25°C	–0.1%	±0.004%	0.1%	
Output voltage temperature drift		DAC8560A, DAC8560B(3)		5	25	ppm/°C
		DAC8560C, DAC8560D(4)		2	5	
Output voltage noise		f = 0.1 Hz to 10 Hz		16		μV_{PP}
Output voltage noise density (high-frequency noise)		T_A = 25°C, f = 1 MHz, C_L = 0 µF		125		nV/√Hz
		T_A = 25°C, f = 1 MHz, C_L = 1 µF		20		
		T_A = 25°C, f = 1 MHz, C_L = 4 µF		2		
Load regulation, sourcing(5)		T_A = 25°C		30		µV/mA
Load regulation, sinking(5)		T_A = 25°C		15		µV/mA
Output current load capability(2)				±20		mA
Line regulation		T_A = 25°C		10		µV/V
Long-term stability/drift (aging)(5)		T_A = 25°C, time = 0 to 1900 hours		50		ppm
Thermal hysteresis(5)		First cycle		100		ppm
		Additional cycles		25		
REFERENCE						
Internal reference current consumption		V_{DD} = 5.5 V		360		µA
		V_{DD} = 3.6 V		348		
External reference current		External V_{REF} = 2.5 V, if internal reference is disabled		20		µA
Reference input range			0		V_{DD}	V
Reference input impedance				125		kΩ
LOGIC INPUTS (2)						
Input current				±1		µA
$V_{IN}L$	Logic input LOW voltage	V_{DD} = 5 V			0.8	V
		V_{DD} = 3 V			0.6	
$V_{IN}H$	Logic input HIGH voltage	V_{DD} = 5 V	2.4			V
		V_{DD} = 3 V	2.1			
Pin capacitance					3	pF
POWER REQUIREMENTS						
V_{DD}			2.7		5.5	V
I_{DD} (6)	Normal mode	V_{DD} = 3.6 V to 5.5 V, V_{IH} = V_{DD} and V_{IL} = GND		0.53	0.85	mA
		V_{DD} = 2.7 V to 3.6 V, V_{IH} = V_{DD} and V_{IL} = GND		0.51	0.84	
	All power-down modes	V_{DD} = 3.6 V to 5.5 V, V_{IH} = V_{DD} and V_{IL} = GND		1.2	2.5	µA
		V_{DD} = 2.7 V to 3.6 V, V_{IH} = V_{DD} and V_{IL} = GND		0.7	2.2	
Power dissipation(6)	Normal mode	V_{DD} = 3.6 V to 5.5 V		2.6	4.7	mW
		V_{DD} = 2.7 V to 3.6 V		1.5	3	
	All power-down modes	V_{DD} = 3.6 V to 5.5 V		6	14	µW
		V_{DD} = 2.7 V to 3.6 V		2	8	
TEMPERATURE RANGE						
Specified performance			–40		105	°C

(3) Reference is trimmed and tested at room temperature, and is characterized from –40°C to +120°C.
(4) Reference is trimmed and tested at two temperatures (25°C and 105°C), and is characterized from –40°C to +120°C.
(5) Explained in more detail in *Application and Implementation*.
(6) Input code = 32768, reference current included, no load.

Copyright © 2006–2018, Texas Instruments Incorporated

6.6 Timing Requirements

V_{DD} = 2.7 V to 5.5 V, all specifications –40°C to +105°C (unless otherwise noted)(1) (2)

PARAMETER			MIN	NOM	MAX	UNIT
t_1 (3)	SCLK cycle time	V_{DD} = 2.7 V to 3.6 V	50			ns
		V_{DD} = 3.6 V to 5.5 V	33			
t_2	SCLK HIGH time	V_{DD} = 2.7 V to 3.6 V	13			ns
		V_{DD} = 3.6 V to 5.5 V	13			
t_3	SCLK LOW time	V_{DD} = 2.7 V to 3.6 V	22.5			ns
		V_{DD} = 3.6 V to 5.5 V	13			
t_4	$\overline{SYNC}$ to SCLK rising edge setup time	V_{DD} = 2.7 V to 3.6 V	0			ns
		V_{DD} = 3.6 V to 5.5 V	0			
t_5	Data setup time	V_{DD} = 2.7 V to 3.6 V	5			ns
		V_{DD} = 3.6 V to 5.5 V	5			
t_6	Data hold time	V_{DD} = 2.7 V to 3.6 V	4.5			ns
		V_{DD} = 3.6 V to 5.5 V	4.5			
t_7	SCLK falling edge to $\overline{SYNC}$ rising edge	V_{DD} = 2.7 V to 3.6 V	0			ns
		V_{DD} = 3.6 V to 5.5 V	0			
t_8	Minimum $\overline{SYNC}$ HIGH time	V_{DD} = 2.7 V to 3.6 V	50			ns
		V_{DD} = 3.6 V to 5.5 V	33			
t_9	24th SCLK falling edge to $\overline{SYNC}$ falling edge	V_{DD} = 2.7 V to 3.6 V	100			ns
		V_{DD} = 3.6 V to 5.5 V	100			
t_{10}	$\overline{SYNC}$ rising edge to 24th SCLK falling edge (for successful $\overline{SYNC}$ interrupt)	V_{DD} = 2.7 V to 3.6 V	15			ns
		V_{DD} = 3.6 V to 5.5 V	15			

(1) All input signals are specified with $t_R = t_F$ = 3 ns (10% to 90% of V_{DD}) and timed from a voltage level of (V_{IL} + V_{IH}) / 2.
(2) See Figure 1.
(3) Maximum SCLK frequency is 3 0MHz at V_{DD} = 3.6 V to 5.5 V and 20 MHz at V_{DD} = 2.7 V to 3.6 V.

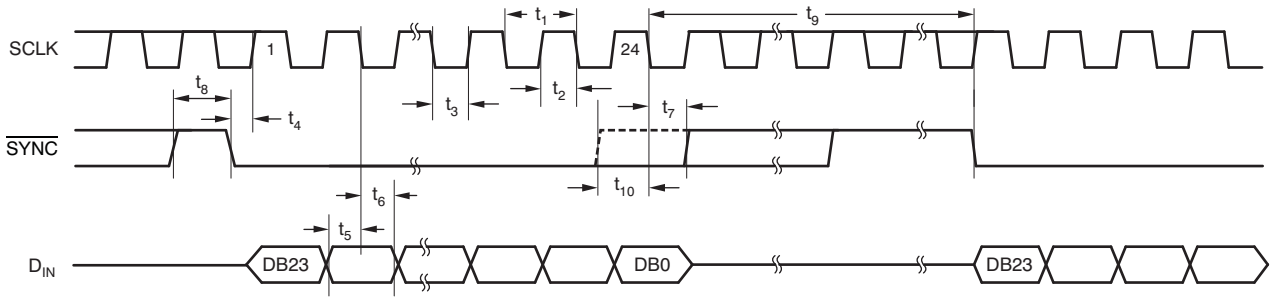

Figure 1. Serial Write Operation

6.7 Typical Characteristics: Internal Reference

At T_A = 25°C, unless otherwise noted.

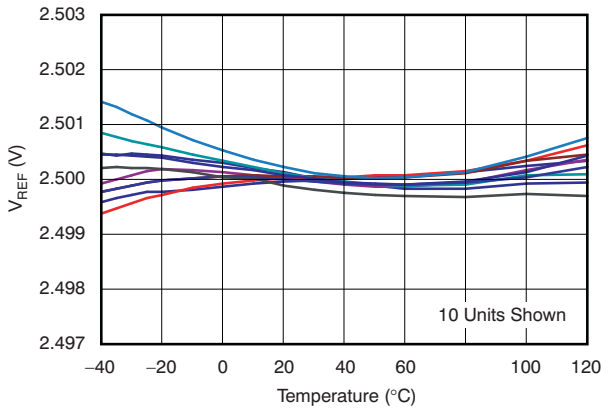

Figure 2. Internal Reference Voltage vs Temperature (Grades C and D)

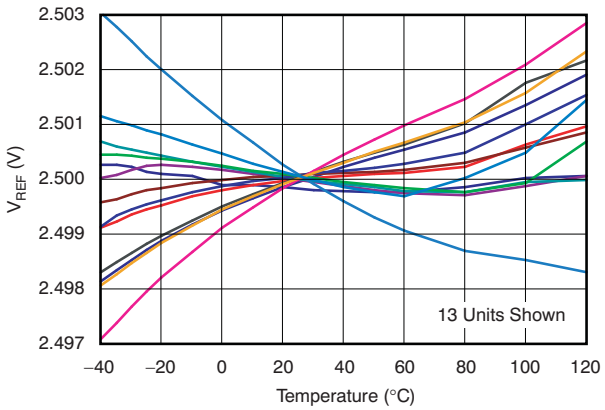

Figure 3. Internal Reference Voltage vs Temperature (Grades A and B)

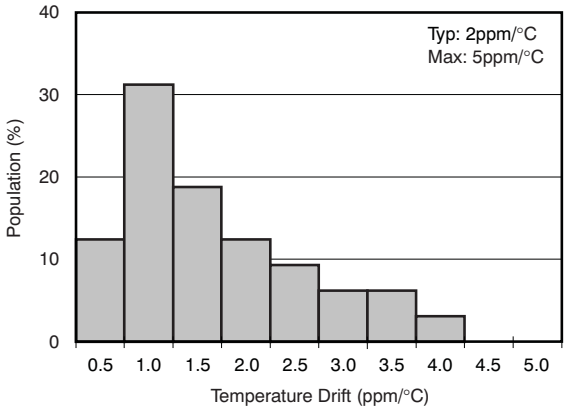

Figure 4. Reference Output Temperature Drift (–40°C to 120°C, Grades C and D)

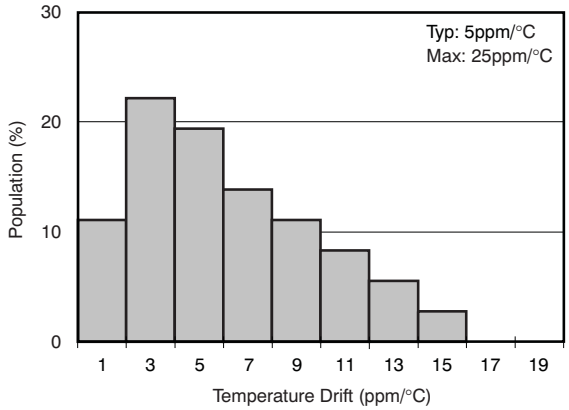

Figure 5. Reference Output Temperature Drift (–40°C to 120°, Grades A and B)

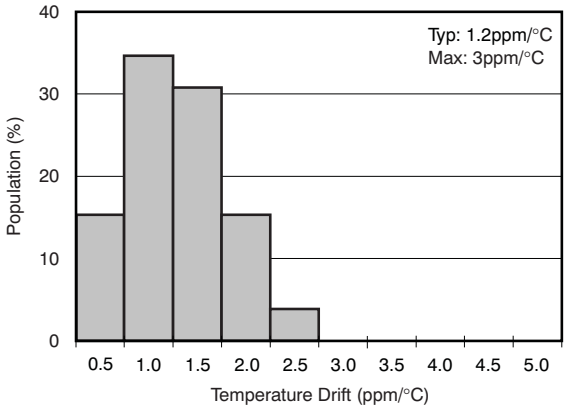

Figure 6. Reference Output Temperature Drift (0°C to 120°C, Grades C and D)

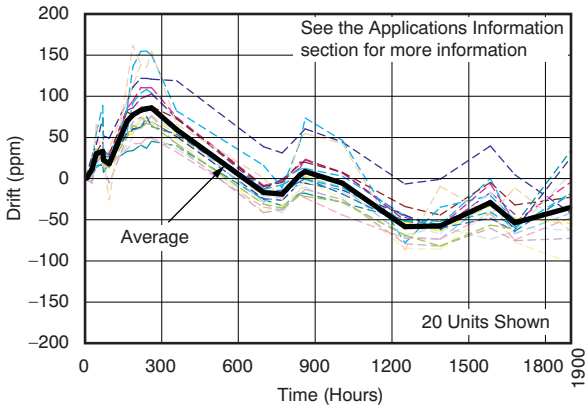

Explained in more detail in *Application and Implementation* .

Figure 7. Long-Term Stability/Drift (1)

(1)

Copyright © 2006–2018, Texas Instruments Incorporated

Typical Characteristics: Internal Reference (continued)

At T_A = 25°C, unless otherwise noted.

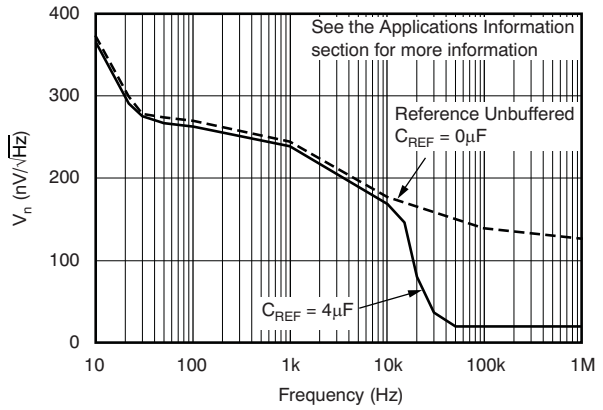

Explained in more detail in *Application and Implementation*.

Figure 8. Internal Reference Noise Density vs Frequency

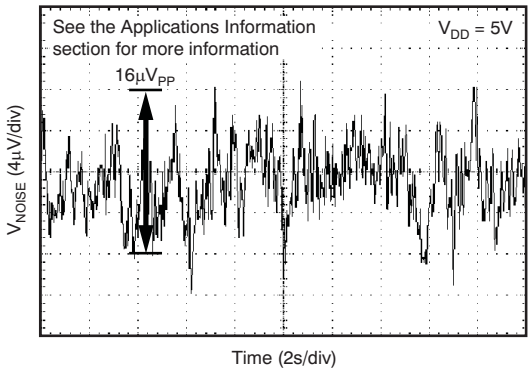

Explained in more detail in *Application and Implementation*.

Figure 9. Internal Reference Noise 0.1 Hz to 10 Hz

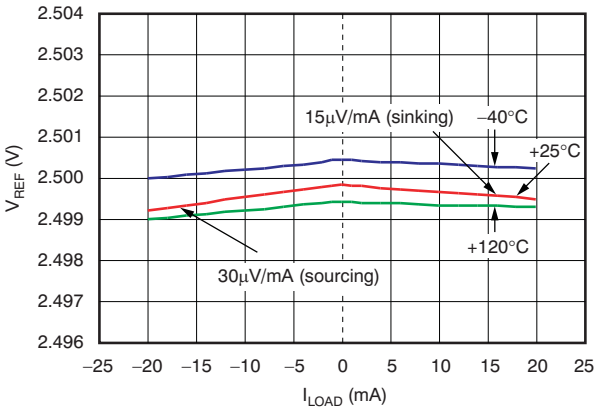

Figure 10. Internal Reference Voltage vs Load Current (Grades C and D)

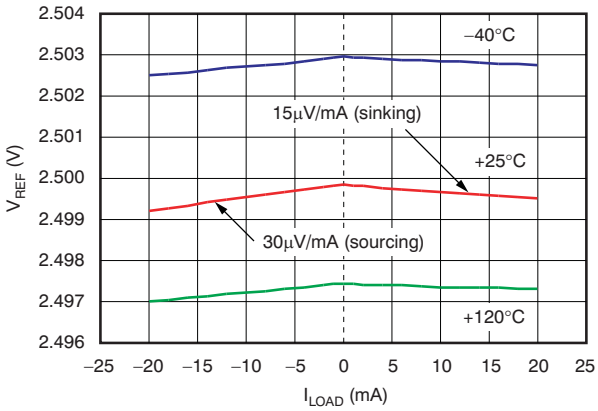

Figure 11. Internal Reference Voltage vs Load Current (Grades A and B)

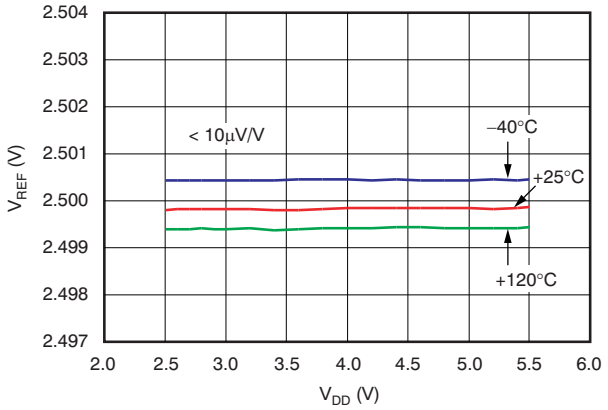

Figure 12. Internal Reference Voltage vs Supply Voltage (Grades C and D)

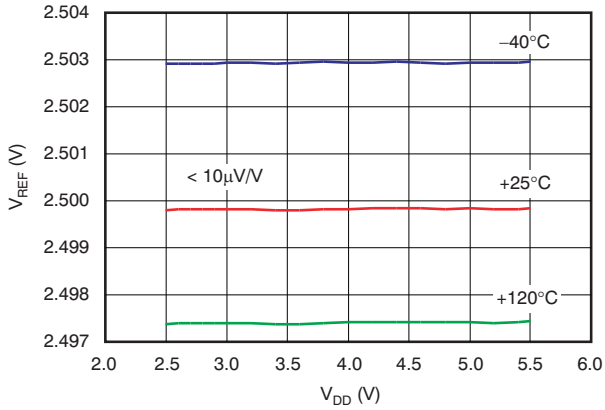

Figure 13. Internal Reference Voltage vs Supply Voltage (Grades A and B)

6.8 Typical Characteristics: DAC at V_{DD} = 5 V

At T_A = 25°C, external reference used, and DAC output not loaded, unless otherwise noted.

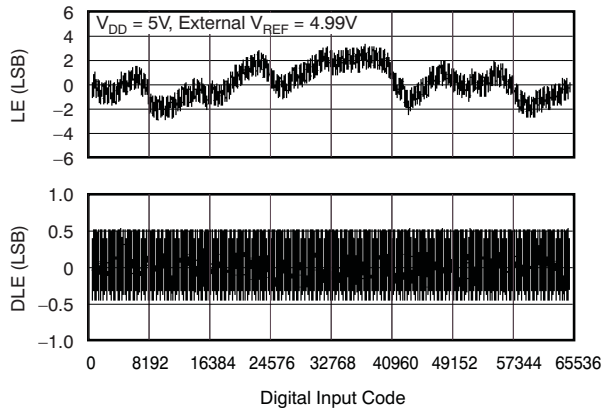

–40°C

Figure 14. Linearity Error and Differential Linearity Error vs Digital Input Code

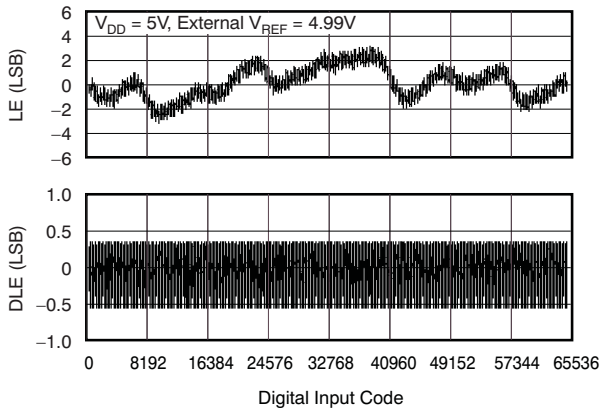

25°C

Figure 15. Linearity Error and Differential Linearity Error vs Digital Input Code

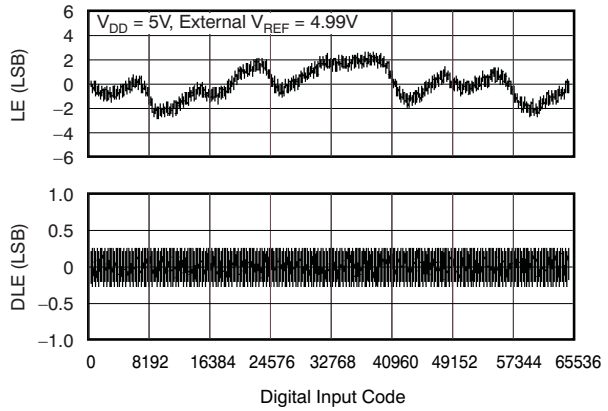

105°C

Figure 16. Linearity Error and Differential Linearity Error vs Digital Input Code

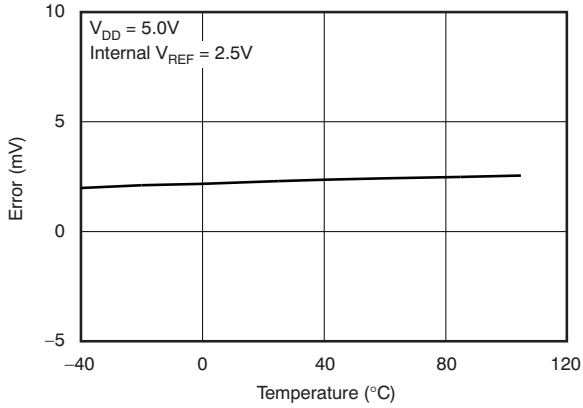

Figure 17. Zero-Scale Error vs Temperature

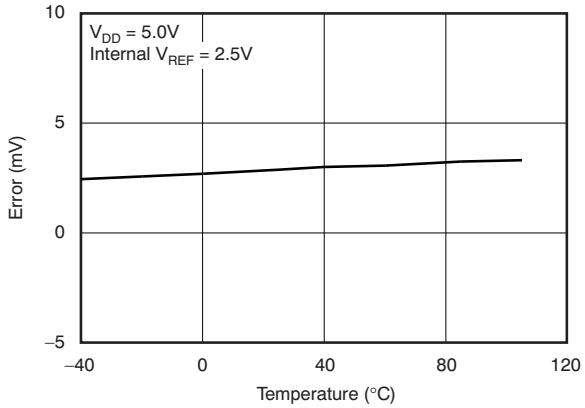

Figure 18. Full-Scale Error vs Temperature

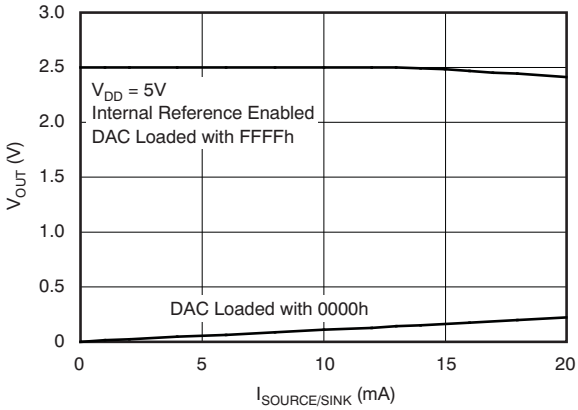

Figure 19. Source and Sink Current Capability

Copyright © 2006–2018, Texas Instruments Incorporated

Typical Characteristics: DAC at V_{DD} = 5 V (continued)

At T_A = 25°C, external reference used, and DAC output not loaded, unless otherwise noted.

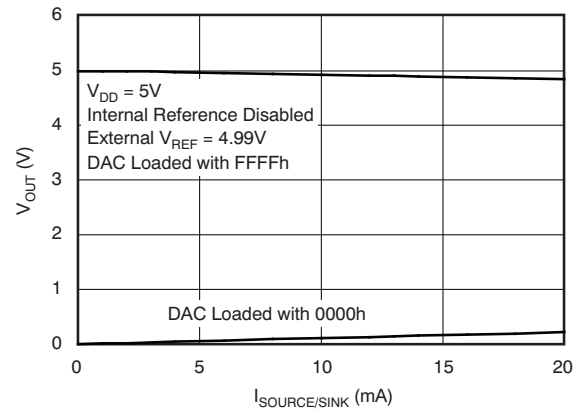

Figure 20. Source and Sink Current Capability

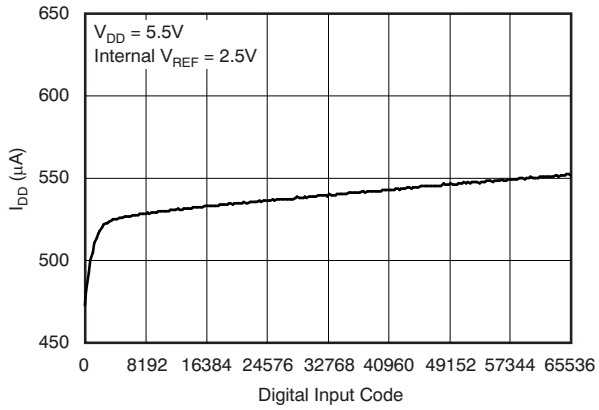

Figure 21. Power-Supply Current vs Digital Input Code

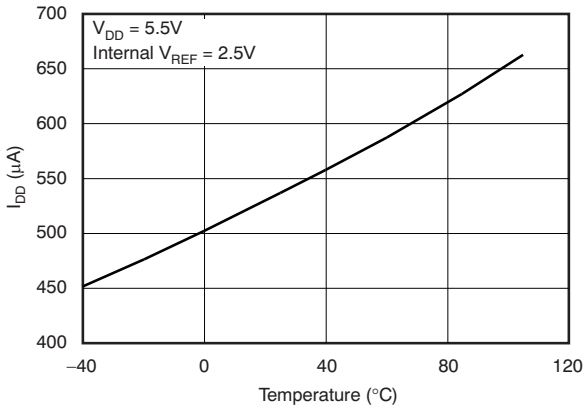

Figure 22. Power-Supply Current vs Temperature

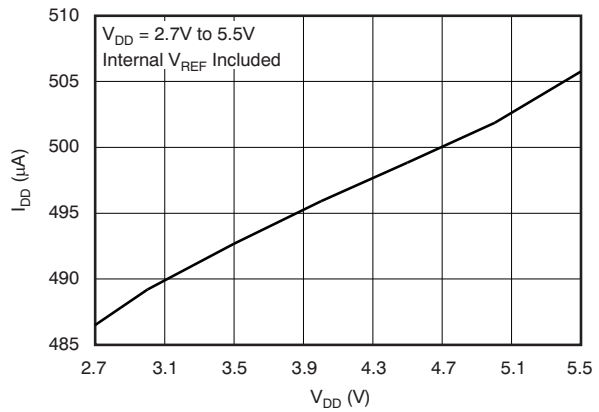

Figure 23. Power-Supply Current vs Power-Supply Voltage

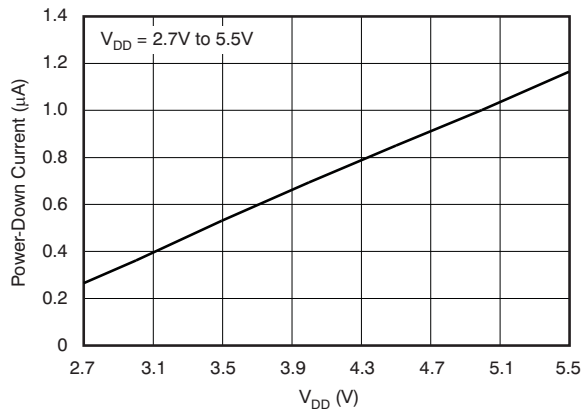

Figure 24. Power-Down Current vs Power-Supply Voltage

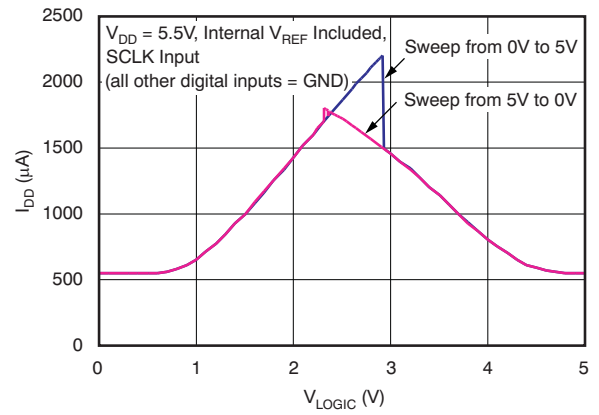

Figure 25. Power-Supply Current vs Logic Input Voltage

Typical Characteristics: DAC at V_{DD} = 5 V (continued)

At T_A = 25°C, external reference used, and DAC output not loaded, unless otherwise noted.

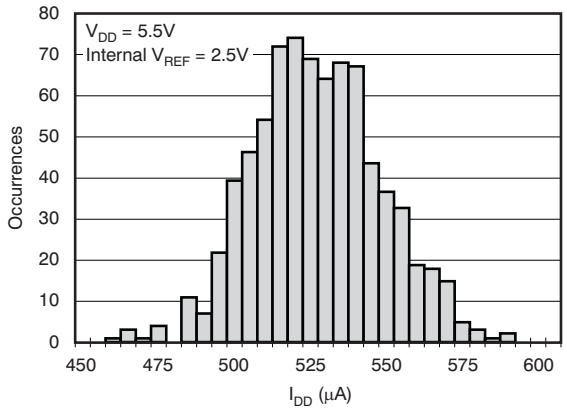

Figure 26. Power-Supply Current Histogram

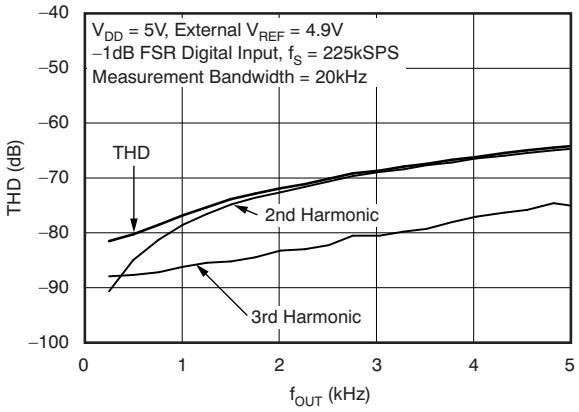

Figure 27. Total Harmonic Distortion vs Output Frequency

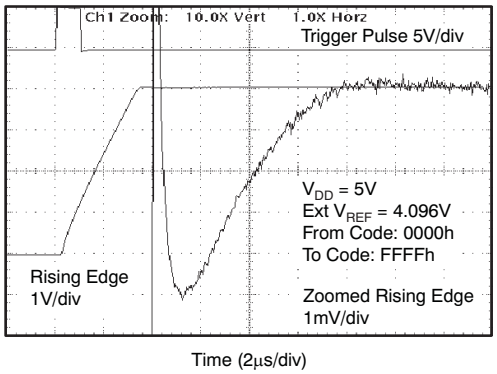

5-V Rising Edge

Figure 28. Full-Scale Settling Time

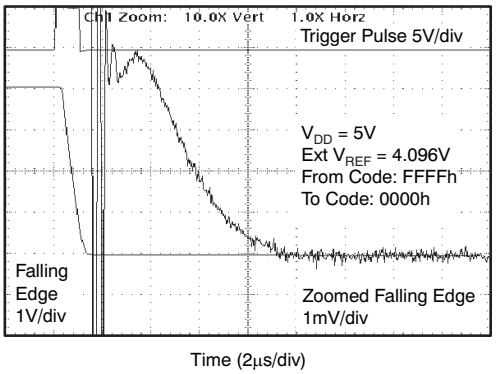

5-V Falling Edge

Figure 29. Full-Scale Settling Time

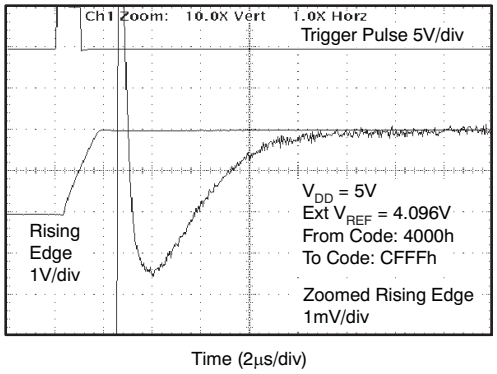

5-V Rising Edge

Figure 30. Half-Scale Settling Time

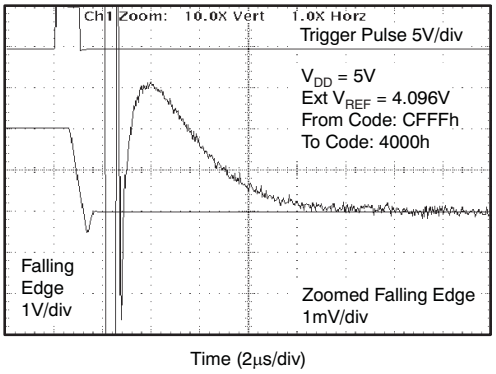

5-V Falling Edge

Figure 31. Half-Scale Settling Time

Copyright © 2006–2018, Texas Instruments Incorporated

Typical Characteristics: DAC at V_{DD} = 5 V (continued)

At T_A = 25°C, external reference used, and DAC output not loaded, unless otherwise noted.

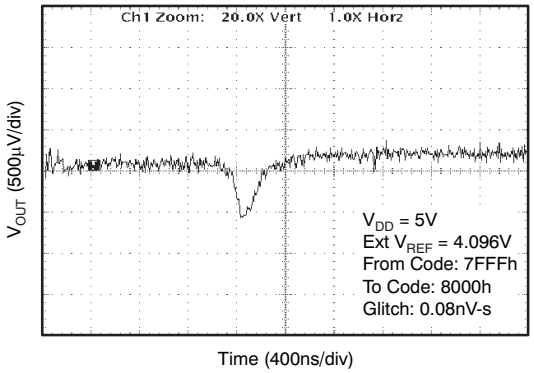

Rising Edge 5 V 1-LSB Step

Figure 32. Glitch Energy

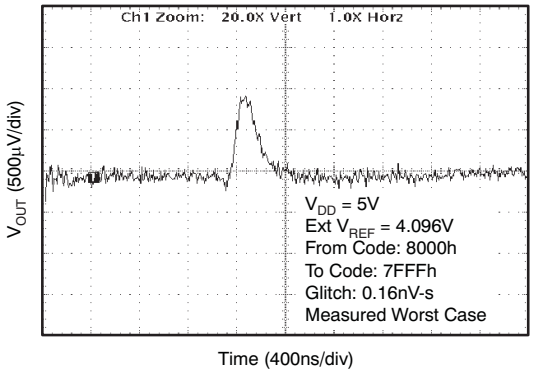

Falling Edge 5 V 1-LSB Step

Figure 33. Glitch Energy

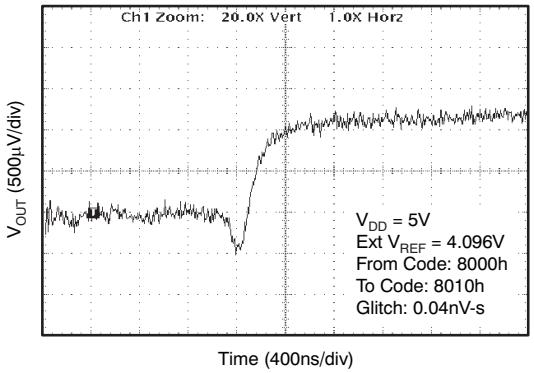

Rising Edge 5 V 16-LSB Step

Figure 34. Glitch Energy

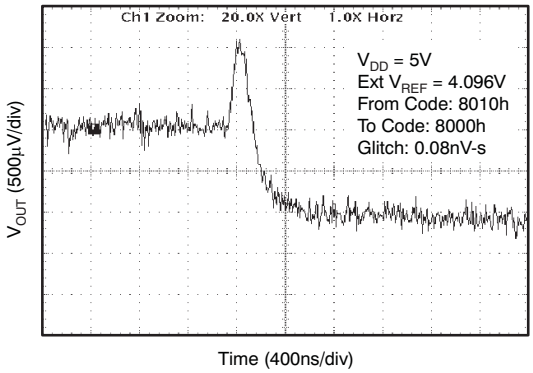

Falling Edge 5 V 16-LSB Step

Figure 35. Glitch Energy

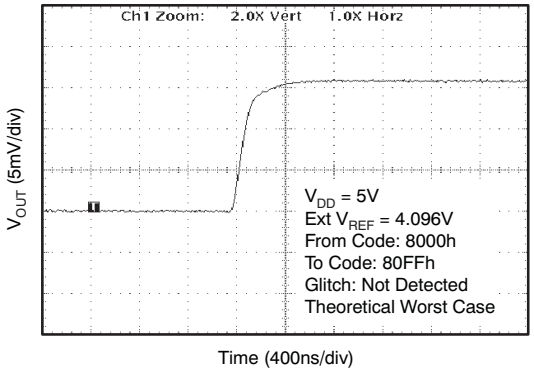

Rising Edge 5 V 2566-LSB Step

Figure 36. Glitch Energy

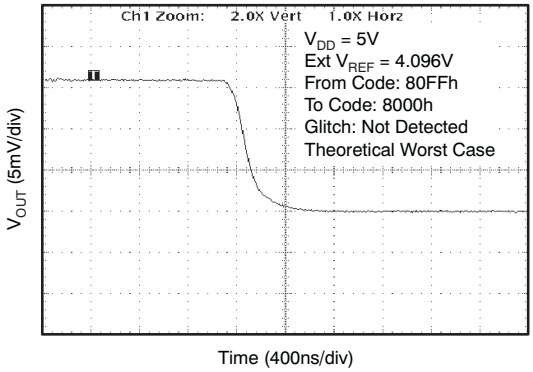

Falling Edge 5 V 256-LSB Step

Figure 37. Glitch Energy

Typical Characteristics: DAC at V_{DD} = 5 V (continued)

At T_A = 25°C, external reference used, and DAC output not loaded, unless otherwise noted.

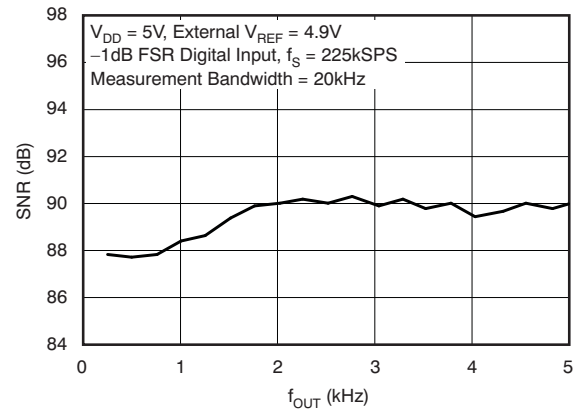

Figure 38. Signal-to-Noise Ratio vs Output Frequency

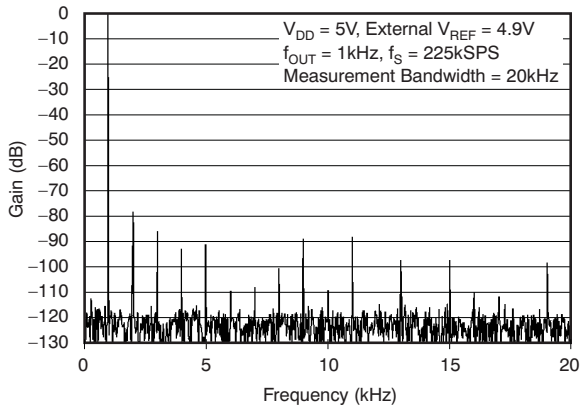

Figure 39. Power Spectral Density

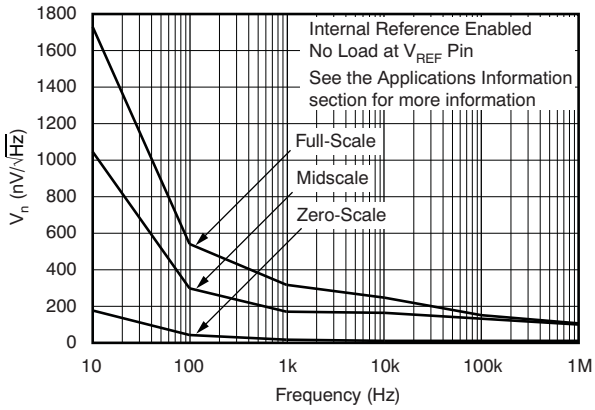

Explained in more detail in *Application and Implementation*.

Figure 40. DAC Output Noise Density vs Frequency

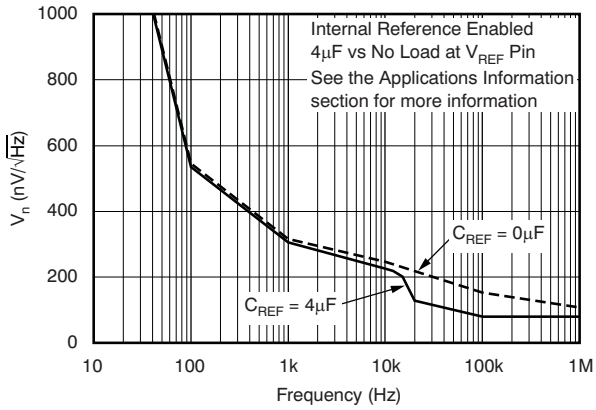

Explained in more detail in the *Application and Implementation*

Figure 41. DAC Output Noise Density vs Frequency

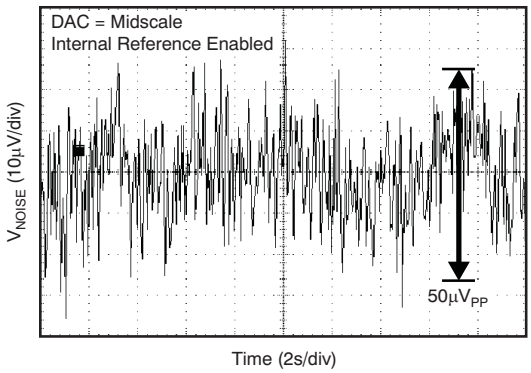

0.1 Hz to 10 Hz

Figure 42. DAC Output Noise

Copyright © 2006–2018, Texas Instruments Incorporated

6.9 Typical Characteristics: DAC at V_{DD} = 3.6 V

At T_A = 25°C, internal reference used, and DAC output not loaded, unless otherwise noted

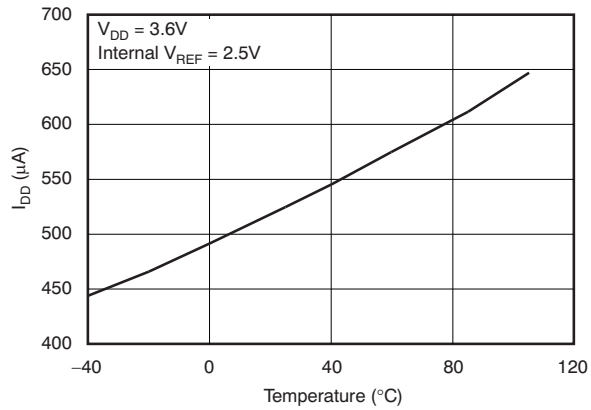

Figure 43. Power-Supply Current vs Temperature

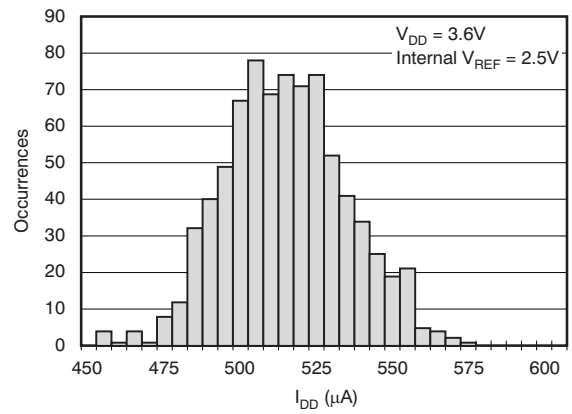

Figure 44. Power-Supply Current Histogram

6.10 Typical Characteristics: DAC at V_{DD} = 2.7 V

At T_A = 25°C, internal reference used, and DAC output not loaded, unless otherwise noted

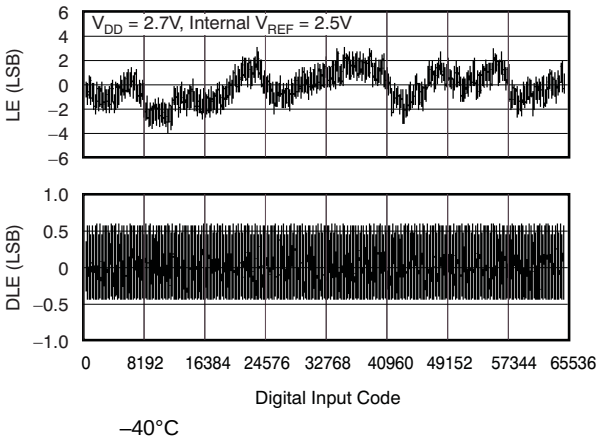

–40°C

Figure 45. Linearity Error and Differential Linearity Error vs Digital Input Code

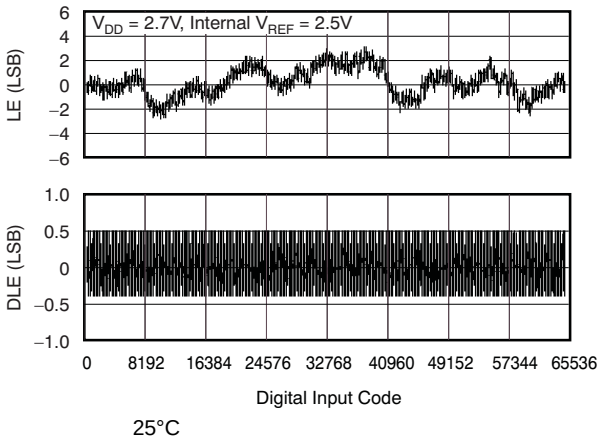

25°C

Figure 46. Linearity Error and Differential Linearity Error vs Digital Input Code

Typical Characteristics: DAC at V_{DD} = 2.7 V (continued)

At T_A = 25°C, internal reference used, and DAC output not loaded, unless otherwise noted

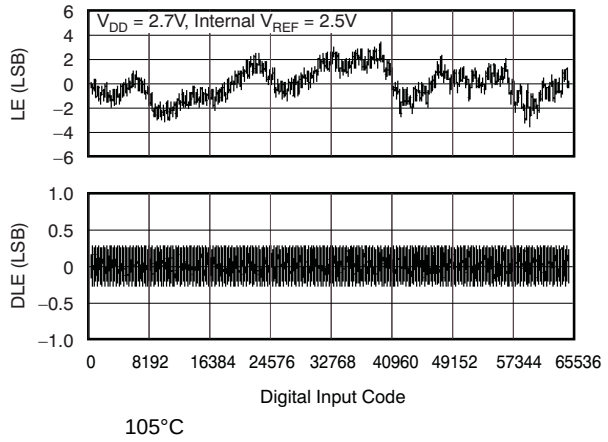

Figure 47. Linearity Error and Differential Linearity Error vs Digital Input Code

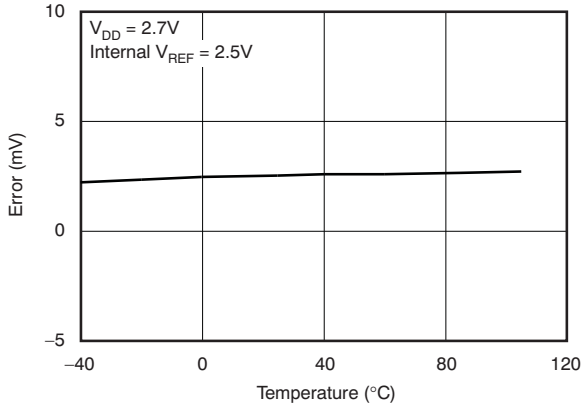

Figure 48. Zero-Scale Error vs Temperature

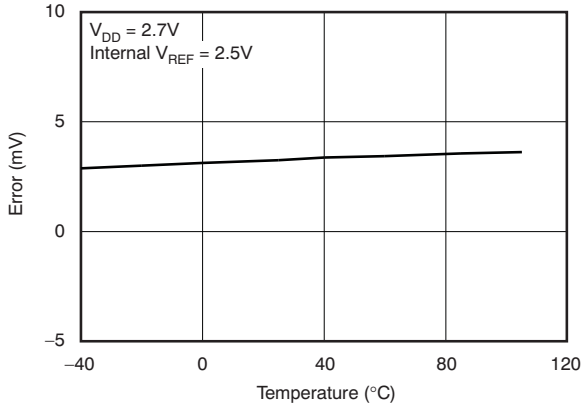

Figure 49. Full-Scale Error vs Temperature

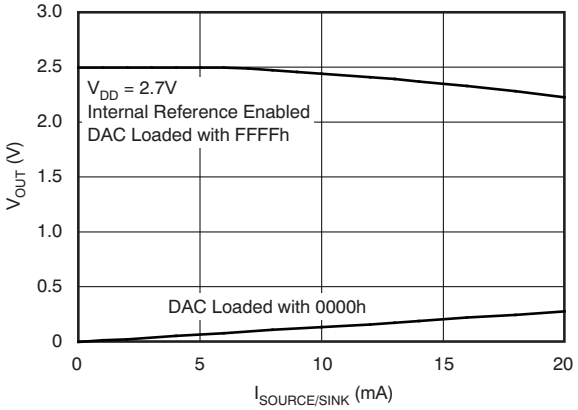

Figure 50. Source and Sink Current Capability

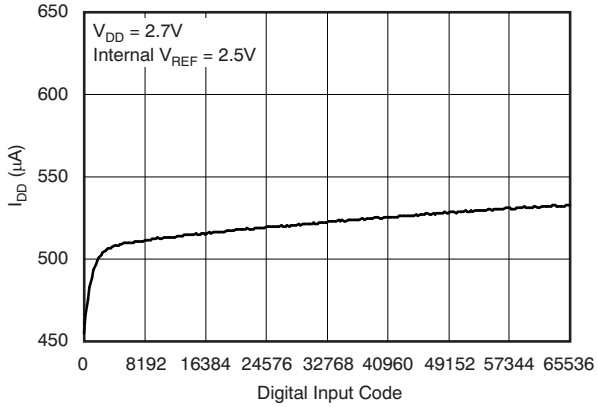

Figure 51. Supply Current vs Digital Input Code

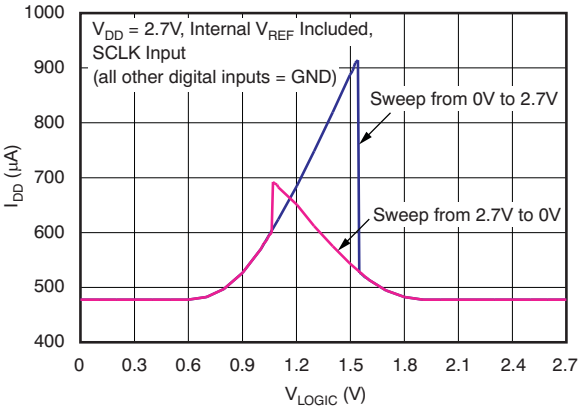

Figure 52. Power-Supply Current vs Logic Input Voltage

Copyright © 2006–2018, Texas Instruments Incorporated

Typical Characteristics: DAC at V_{DD} = 2.7 V (continued)

At T_A = 25°C, internal reference used, and DAC output not loaded, unless otherwise noted

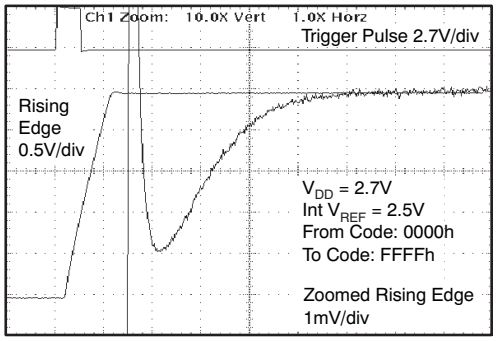

2.7-V Rising Edge

Figure 53. Full-Scale Settling Time

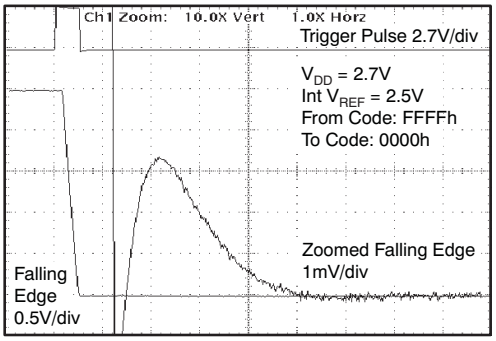

2.7-V Falling Edge

Figure 54. Full-Scale Settling Time: 2.7-V Falling Edge

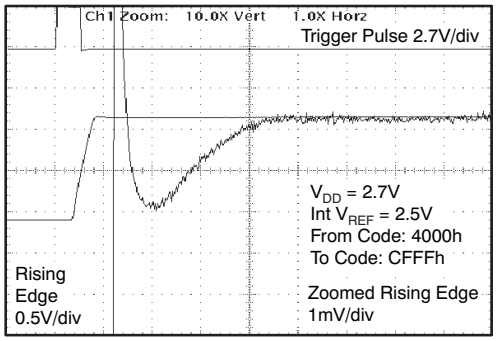

2.7-V Rising Edge

Figure 55. Half-Scale Settling Time

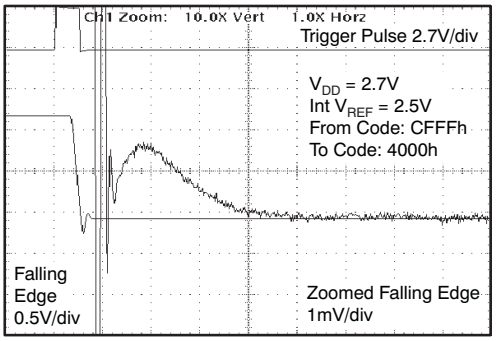

2.7-V Falling Edge

Figure 56. Half-Scale Settling Time

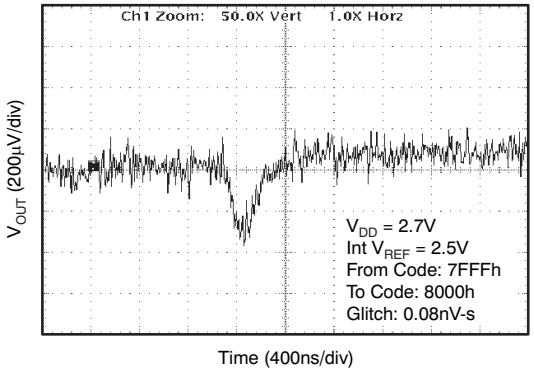

Rising Edge 2.7 V 1-LSB Step

Figure 57. Glitch Energy

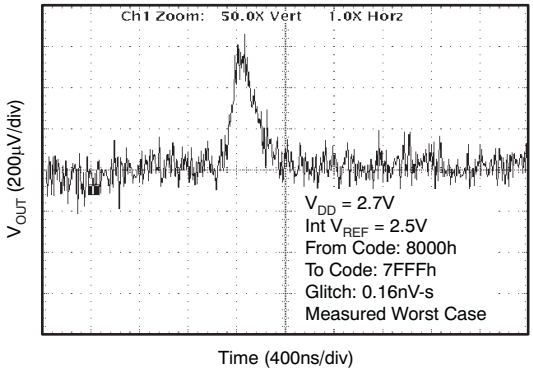

Falling Edge 2.7 V 1-LSB Step

Figure 58. Glitch Energy

Typical Characteristics: DAC at V_{DD} = 2.7 V (continued)

At T_A = 25°C, internal reference used, and DAC output not loaded, unless otherwise noted

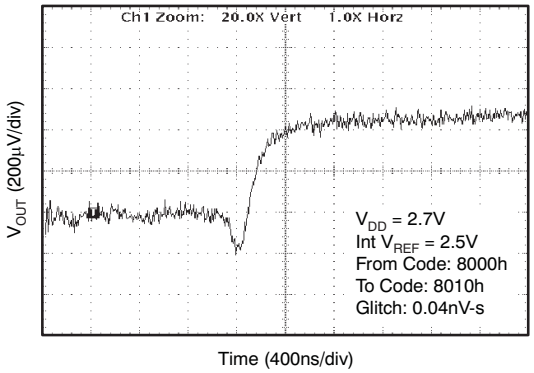

Rising Edge 2.7 V 16-LSB Step

Figure 59. Glitch Energy

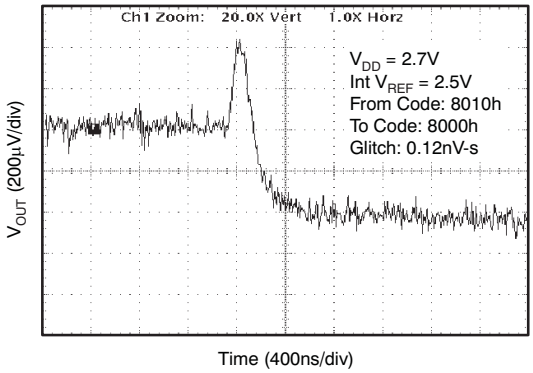

Falling Edge 2.7 V 16-LSB Step

Figure 60. Glitch Energy

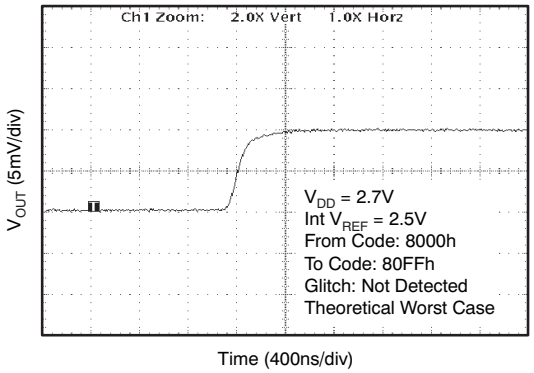

Rising Edge 2.7 V 256-LSB Step

Figure 61. Glitch Energy

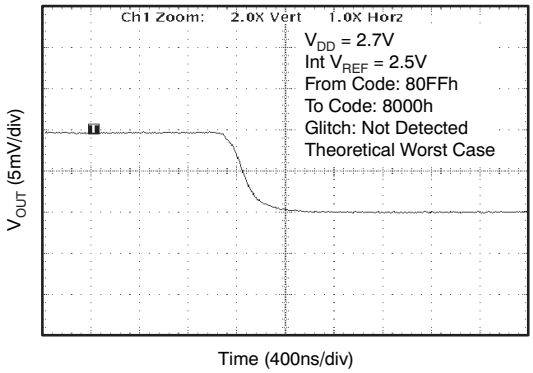

Falling Edge 2.7 V 256-LSB Step

Figure 62. Glitch Energy

Copyright © 2006–2018, Texas Instruments Incorporated

7 Detailed Description

7.1 Overview

The DAC8560 is a low-power, voltage output, 16-bit digital-to-analog converter (DAC). The DAC8560 includes a 2.5-V, 2-ppm/°C internal reference (enabled by default), giving a full-scale output voltage range of 2.5 V. The internal reference has an initial accuracy of 0.02% and can source up to 20 mA at the V_{REF} pin. The device is monotonic, provides very good linearity, and minimizes undesired code-to-code transient voltages (glitch). The DAC8560 uses a versatile 3-wire serial interface that operates at clock rates up to 30 MHz. It is compatible with standard SPI, QSPI, Microwire, and digital-signal-processor (DSP) interfaces.

7.2 Functional Block Diagram

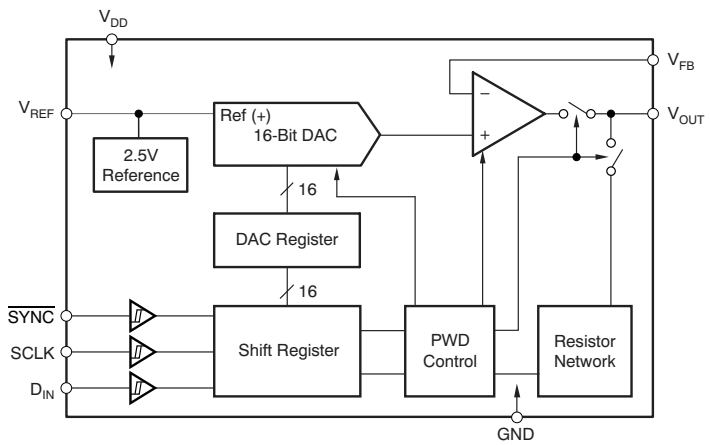

7.3 Feature Description

7.3.1 Digital-to-Analog Converter (DAC)

The DAC8560 architecture consists of a string DAC followed by an output buffer amplifier. Figure 63 shows a block diagram of the DAC architecture.

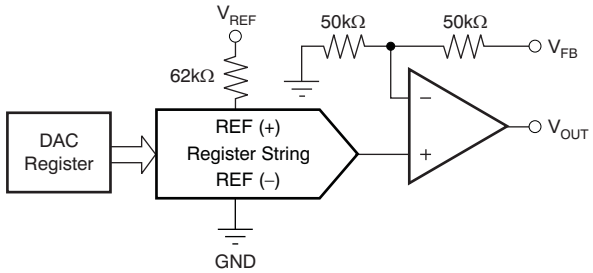

Figure 63. DAC8560 Architecture

The input coding to the DAC8560 is straight binary, so the ideal output voltage is given by:

$$V_{OUT} = \frac{D_{IN}}{65536} \times V_{REF}$$

where D_{IN} = decimal equivalent of the binary code that is loaded to the DAC register; it can range from 0 to 65535. (1)

Feature Description (continued)

7.3.2 Resistor String

The resistor string section is shown in Figure 64. It is simply a string of resistors, each of value R. The code loaded into the DAC register determines at which node on the string the voltage is tapped off to be fed into the output amplifier by closing one of the switches connecting the string to the amplifier. It is monotonic because it is a string of resistors.

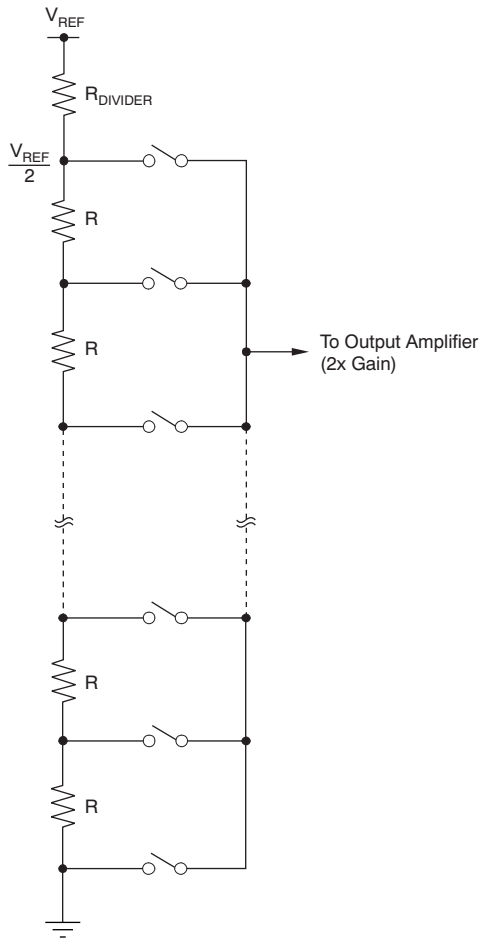

Figure 64. Resistor String

7.3.3 Output Amplifier

The output buffer amplifier is capable of generating rail-to-rail voltages on its output, giving an output range of 0 V to V_{DD}. It is capable of driving a load of 2 kΩ in parallel with 1000 pF to GND. The source and sink capabilities of the output amplifier can be seen in the *Typical Characteristics: DAC at V_{DD} = 5 V*. The slew rate is 1.8 V/µs with a full-scale settling time of 8 µs with the output unloaded.

The inverting input of the output amplifier is available at the V_{FB} pin. This feature allows better accuracy in critical applications by tying the V_{FB} point and the amplifier output together directly at the load. Other signal conditioning circuitry may also be connected between these points for specific applications.

Copyright © 2006–2018, Texas Instruments Incorporated

Feature Description (continued)

7.3.4 DAC Noise Performance

Typical noise performance for the DAC8560 with the internal reference enabled is shown in Figure 40 to Figure 42. Output noise spectral density at pin V_{OUT} versus frequency is depicted in Figure 40 for full-scale, midscale, and zero-scale input codes. The typical noise density for midscale code is 170 nV/√Hz at 1 kHz and 100nV/√Hz at 1MHz. High-frequency noise can be improved by filtering the reference noise as shown in Figure 41, where a 4-µF load capacitor is connected to the V_{REF} pin and compared to the no-load condition. Integrated output noise between 0.1 Hz and 10 Hz is close to 50 μV_{PP} (midscale), as shown in Figure 42.

7.3.5 Internal Reference

The DAC8560 includes a 2.5-V internal reference that is enabled by default. The internal reference is externally available at the V_{REF} pin. TI recommends a minimum 100-nF capacitor between the reference output and GND for noise filtering.

The internal reference of the DAC8560 is a bipolar transistor-based, precision bandgap voltage reference. The basic bandgap topology is shown in Figure 65. Transistors Q_1 and Q_2 are biased such that the current density of Q_1 is greater than that of Q_2. The difference of the two base-emitter voltages ($V_{BE1} - V_{BE2}$) has a positive temperature coefficient and is forced across resistor R_1. This voltage is gained up and added to the base-emitter voltage of Q_2, which has a negative temperature coefficient. The resulting output voltage is virtually independent of temperature. The short-circuit current is limited by design to approximately 100 mA.

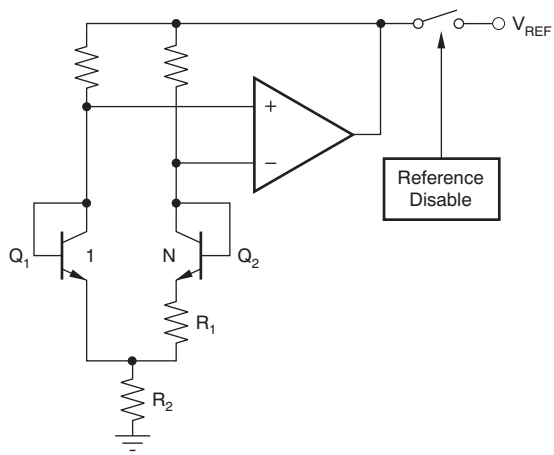

Figure 65. Simplified Schematic of the Bandgap Reference

7.3.5.1 Enable/Disable Internal Reference

The DAC8560 internal reference is enabled by default; however, the reference can be disabled for debugging or evaluation purposes. A serial command requiring at least two additional SCLK cycles at the end of the 24-bit write sequence (see *Serial Interface*) must be used to disable the internal reference. For proper operation, a total of at least 26 SCLK cycles are required for each enable/disable internal reference update sequence, during which $\overline{SYNC}$ must be held low. To disable the internal reference, execute the write sequence illustrated in Table 2 followed by at least two additional SCLK falling edges while $\overline{SYNC}$ is low.

To then enable the reference, either perform a power-cycle to reset the device, or sequentially execute the two write sequences in Table 3 and Table 4. Each of these write sequences must be followed by at least two additional SCLK falling edges while $\overline{SYNC}$ remains low.

During the time that the internal reference is disabled, the DAC will function normally using an external reference. At this point, the internal reference is disconnected from the V_{REF} pin (tri-state). Do not attempt to drive the V_{REF} pin externally and internally at the same time indefinitely.

Feature Description (continued)

7.3.5.2 Internal Reference Load

The DAC8560 internal reference does not require an external load capacitor for stability because it is stable with any capacitive load. However, for improved noise performance, TI recommends an external load capacitor of 150 nF or larger connected to the V_{REF} output. Figure 66 shows the typical connections required for operation of the DAC8560 internal reference. A supply bypass capacitor at the V_{DD} input is also recommended.

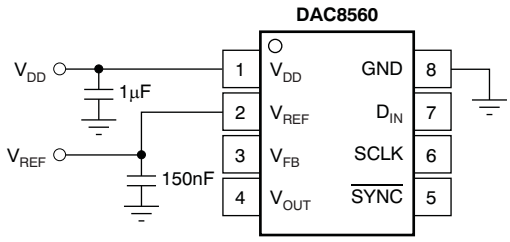

Figure 66. Typical Connections for Operating the DAC8560 Internal Reference

7.3.5.2.1 Supply Voltage

The DAC8560 internal reference features an extremely low dropout voltage. It can be operated with a supply of only 5mV above the reference output voltage in an unloaded condition. For loaded conditions, refer to the *Load Regulation* section. The stability of the DAC8560 internal reference with variations in supply voltage (line regulation, DC PSRR) is also exceptional. Within the specified supply voltage range of 2.7 V to 5.5 V, the variation at V_{REF} is smaller than 10 µV/V; see the *Typical Characteristics: Internal Reference*.

7.3.5.2.2 Temperature Drift

The DAC8560 internal reference is designed to exhibit minimal drift error, defined as the change in reference output voltage over varying temperature. The drift is calculated using the *box* method, which is described by Equation 2:

$$\text{Drift Error} = \left(\frac{V_{REF_MAX} - V_{REF_MIN}}{V_{REF} \times T_{RANGE}}\right) \times 10^6 \ (\text{ppm}/^\circ\text{C})$$

where

- V_{REF_MAX} = maximum reference voltage observed within temperature range T_{RANGE}
- V_{REF_MIN} = minimum reference voltage observed within temperature range T_{RANGE}
- V_{REF} = 2.5 V, target value for reference output voltage (2)

The DAC8560 internal reference (grades C and D) features an exceptional typical drift coefficient of 2 ppm/°C from –40°C to +120°C. Characterizing a large number of units, a maximum drift coefficient of 5 ppm/°C (grades C and D) is observed. Temperature drift results are summarized in the *Typical Characteristics: Internal Reference*.

7.3.5.2.3 Noise Performance

Typical 0.1-Hz to 10-Hz voltage noise can be seen in Figure 9. Additional filtering can be used to improve output noise levels, although care should be taken to ensure the output impedance does not degrade the AC performance. The output noise spectrum at V_{REF} without any external components is depicted in Figure 8, *Internal Reference Noise Density vs Frequency*. Another noise density spectrum is also shown in Figure 8, which was obtained using a 4µF load capacitor at V_{REF} for noise filtering. Internal reference noise impacts the DAC output noise; see the *DAC Noise Performance* section for more details.

Copyright © 2006–2018, Texas Instruments Incorporated

Feature Description (continued)

7.3.5.2.4 Load Regulation

Load regulation is defined as the change in reference output voltage as a result of changes in load current. The load regulation of the DAC8560 internal reference is measured using force and sense contacts as pictured in Figure 67. The force and sense lines reduce the impact of contact and trace resistance, resulting in accurate measurement of the load regulation contributed solely by the DAC8560 internal reference. Measurement results are summarized in the *Typical Characteristics: Internal Reference*. Force and sense lines should be used for applications requiring improved load regulation.

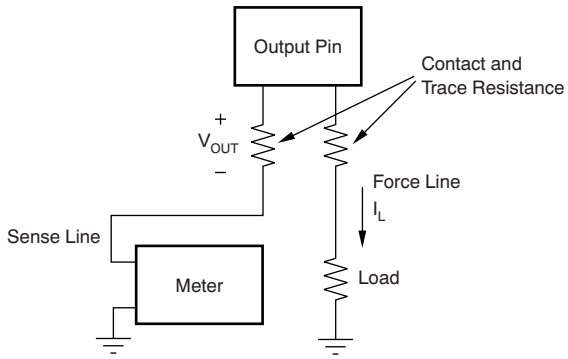

Figure 67. Accurate Load Regulation of the DAC8560 Internal Reference

7.3.5.2.5 Long-Term Stability

Long-term stability/aging refers to the change of the output voltage of a reference over a period of months or years. This effect lessens as time progresses, as shown in Figure 7, the typical long-term stability curve. The typical drift value for the DAC8560 internal reference is 50 ppm from 0 hours to 1900 hours. This parameter is characterized by powering up and measuring 20 units at regular intervals for a period of 1900 hours.

7.3.5.2.6 Thermal Hysteresis

Thermal hysteresis for a reference is defined as the change in output voltage after operating the device at 25°C, cycling the device through the specified temperature range, and returning to 25°C. It is expressed in Equation 3:

$$V_{HYST} = \left(\frac{\left|V_{REF_PRE} - V_{REF_POST}\right|}{V_{REF_NOM}}\right) \times 10^6 \text{ (ppm)}$$

where

- V_{HYST} = thermal hysteresis
- V_{REF_PRE} = output voltage measured at 25°C pre-temperature cycling
- V_{REF_POST} = output voltage measured after the device has been cycled through the temperature range of –40°C to +120°C, and returned to 25°C (3)

7.4 Device Functional Modes

7.4.1 Power-Down Modes

The DAC8560 supports four separate modes of operation. These modes are programmable by setting two bits (PD1 and PD0) in the control register. Table 1 shows how to control the operating mode with data bits PD1 (DB17) and PD0 (DB16).

Table 1. Operating Modes

PD1 (DB17)	PD0 (DB16)	OPERATING MODE
0	0	Normal operation
0	1	Power-down 1 kΩ to GND
1	0	Power-down 100 kΩ to GND
1	1	Power-down High-Z

When both bits are set to 0, the device works normally with its typical current consumption of 530 μA at 5.5 V. However, for the three power-down modes, the supply current falls to 1.2 μA at 5.5 V (0.7 μA at 3.6 V). Not only does the supply current fall, but the output stage is also internally switched from the output of the amplifier to a resistor network of known values.

The advantage of this switching is that the output impedance of the device is known while it is in power-down mode. As shown in Table 1, there are three different power-down options. V_{OUT} can be connected internally to GND through a 1-kΩ resistor, a 100-kΩ resistor, or open-circuited (High-Z). The output stage is shown in Figure 68.

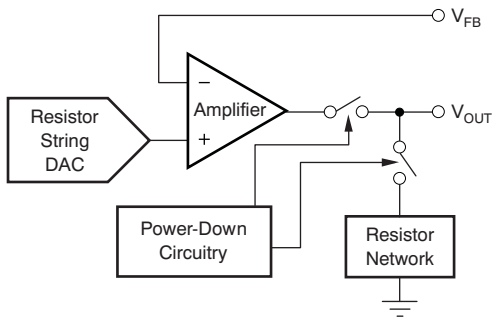

Figure 68. Output Stage During Power Down

All analog circuitry is shut down when the power-down mode is activated. However, the contents of the DAC register are unaffected when in power down. The time to exit power down is typically 2.5 μs for V_{DD} = 5 V, and 5 μs for V_{DD} = 3 V. See the *Typical Characteristics: DAC at V_{DD} = 5 V* for more information.

Copyright © 2006–2018, Texas Instruments Incorporated

7.5 Programming

7.5.1 Serial Interface

The DAC8560 has a 3-wire serial interface ($\overline{SYNC}$, SCLK, and D_{IN}) that is compatible with SPI, QSPI, and Microwire interface standards, as well as most DSPs. See *Figure 1* for an example of a typical write sequence.

The write sequence begins by bringing the $\overline{SYNC}$ line LOW. Data from the D_{IN} line is clocked into the 24-bit shift register on each falling edge of SCLK. The serial clock frequency can be as high as 30 MHz, making the DAC8560 compatible with high-speed DSPs. On the 24th falling edge of the serial clock, the last data bit is clocked in and the programmed function is executed.

At this point, the $\overline{SYNC}$ line may be kept LOW or brought HIGH. In either case, it must be brought HIGH for a minimum of 33 ns before the next write sequence so that a falling edge of $\overline{SYNC}$ can initiate the next write sequence. As previously mentioned, it must be brought HIGH again before the next write sequence.

7.5.2 Input Shift Register

The input shift register is 24 bits wide, as shown in Table 5. The first six bits must be 000000. The next two bits (PD1 and PD0) are control bits that set the desired mode of operation (normal mode or any one of three power-down modes) as indicated in Table 1.

A more complete description of the various modes is located in *Power-Down Modes*. The next 16 bits are the data bits, which are transferred to the DAC register on the 24th falling edge of SCLK under normal operation (see *Table 1*).

7.5.3 $\overline{SYNC}$ Interrupt

In a normal write sequence, the $\overline{SYNC}$ line is kept LOW for at least 24 falling edges of SCLK and the DAC is updated on the 24th falling edge. However, if $\overline{SYNC}$ is brought HIGH before the 24th falling edge, it acts as an interrupt to the write sequence. The shift register is reset, and the write sequence is seen as invalid. Neither an update of the DAC register contents, nor a change in the operating mode occurs, as shown in Figure 69.

7.5.4 Power-On Reset

The DAC8560 contains a power-on-reset circuit that controls the output voltage during power up. On power up, all registers are filled with zeros and the output voltage is zero-scale; it remains there until a valid write sequence is made to the DAC. This feature is useful in applications where it is important to know the state of the output of the DAC while it is in the process of powering up.

Copyright © 2006–2018, Texas Instruments Incorporated

7.6 Register Maps

7.6.1 Write Sequence for Disabling the DAC8560 Internal Reference

Table 2. Write Sequence for Disabling the DAC8560 Internal Reference

DB23																							DB0
0	1	0	0	1	0	0	0	0	0	0	0	0	1	0	0	0	0	0	0	0	0	0	1

7.6.2 Enabling the DAC8560 Internal Reference (Write Sequence 1 of 2)

Table 3. Enabling the DAC8560 Internal Reference (Write Sequence 1 of 2)

DB23																							DB0
0	1	0	0	1	1	0	0	0	0	0	0	0	1	0	0	0	0	0	0	0	0	0	0

7.6.3 Enabling the DAC8560 Internal Reference (Write Sequence 2 of 2)

Table 4. Enabling the DAC8560 Internal Reference (Write Sequence 2 of 2)

DB23																							DB0
0	1	0	0	1	0	0	1	0	0	0	0	0	1	0	0	0	0	0	0	0	0	0	1

7.6.4 DAC8560 Data Input Register Format

Table 5. DAC8560 Data Input Register Format

DB23																							DB0
0	0	0	0	0	0	PD1	PD0	D15	D14	D13	D12	D11	D10	D9	D8	D7	D6	D5	D4	D3	D2	D1	D0

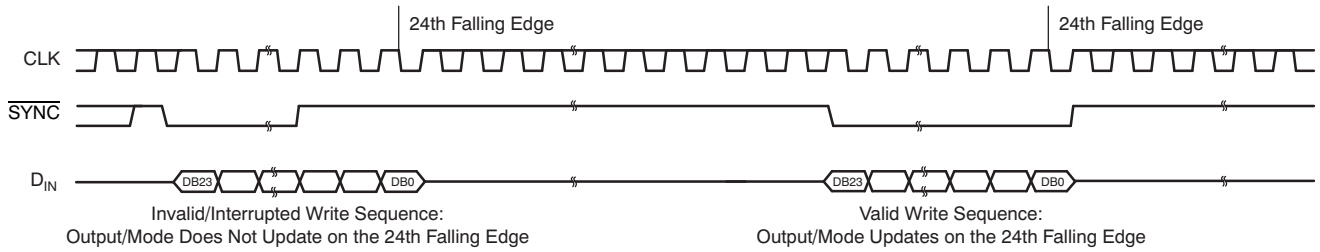

Figure 69. $\overline{\text{SYNC}}$ Interrupt Facility

Copyright © 2006–2018, Texas Instruments Incorporated

8 Application and Implementation

NOTE

Information in the following applications sections is not part of the TI component specification, and TI does not warrant its accuracy or completeness. TI's customers are responsible for determining suitability of components for their purposes. Customers should validate and test their design implementation to confirm system functionality.

8.1 Application Information

The low-power consumption of the DAC8560, coupled with the ultra-low current power-down modes, makes the device a great choice for battery-operated and portable applications such as oscilloscopes and similar test and measurement equipment. In addition to the low-power requirement, these applications often require a bipolar output range for offset and gain calibration as described in the following sections.

8.2 Typical Applications

The output voltage with Figure 70 and Figure 71 for any input code can be calculated using Equation 4:

$$V_O = \left[V_{REF} \times \left(\frac{D}{65536}\right) \times \left(\frac{R_1 + R_2}{R_1}\right) - V_{REF} \times \left(\frac{R_2}{R_1}\right) \right]$$

where D represents the input code in decimal (0–65535). (4)

With V_{REF} = 5 V, R_1 = R_2 = 10 kΩ.

$$V_O = \left(\frac{10 \times D}{65536}\right) - 5V \quad (5)$$

This result has an output voltage range of ±5 V with 0000h corresponding to a –5-V output and FFFFh corresponding to a 5-V output, as shown in Figure 70. Similarly, using the internal reference, a ±2.5-V output voltage range can be achieved, as shown in Figure 71.

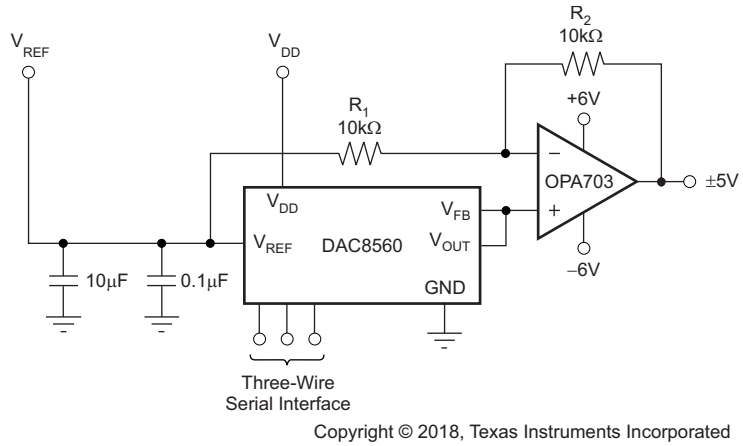

Figure 70. Bipolar Output Range Using External Reference at 5 V

Typical Applications (continued)

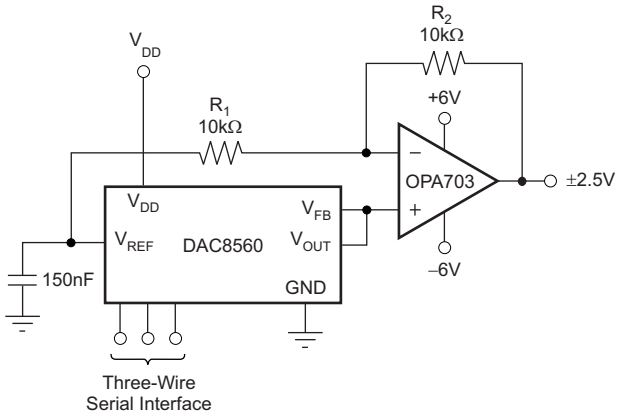

Copyright © 2018, Texas Instruments Incorporated

Figure 71. Bipolar Output Range Using Internal Reference

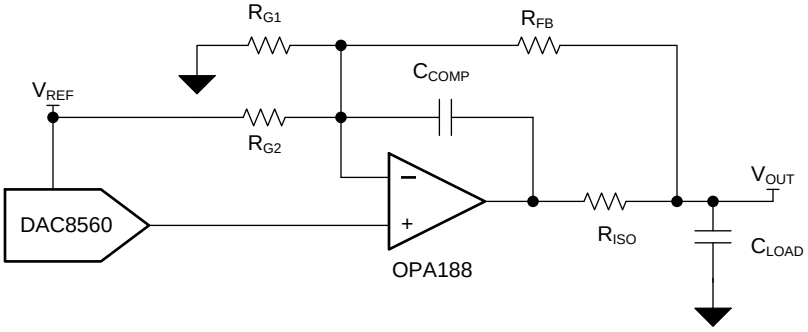

Copyright © 2018, Texas Instruments Incorporated

Figure 72. Bipolar Output Range > ±V_{REF}

8.2.1 Design Requirements

The design requirements and performance goals are summarized as follows:

- DAC Supply Voltage: +5-V DC
- Amplifier Supply Voltage: ±15-V DC
- Input: 3-wire, 24-bit SPI
- Output: ±10-V DC
- Capacitance Load: 20 nF

Table 6. Comparison of Design Goal, Simulation, and Measured Performance

	GOAL	SIMULATED	MEASURED
Total unadjusted error (%FSR)	0.25	0.23	0.0939

Copyright © 2006–2018, Texas Instruments Incorporated

8.2.2 Detailed Design Procedure or Bipolar Operation > ±V_{REF}

8.2.2.1 Bipolar Operation Greater Than ±V_{REF}

The DAC8560 has been designed for single-supply operation; a bipolar output range is also possible using the circuit in Figure 71. This unipolar-to-bipolar signal conditioning circuit uses an operational amplifier (op amp) with negative feedback and three resistors in a modified summing amplifier configuration to generate high-voltage bipolar outputs. The DC transfer function is based on the ratio of the feedback resistor R_{FB} and gain setting resistors R_{G1} and R_{G2}. This design takes consideration for generating voltage outputs and for driving reactive loads such as long cables common in industrial process control applications. The circuit shown in Figure 72 gives an output voltage range greater than ±V_{REF}.

The DC transfer function for this design is defined as:

$$V_{OUT} = \left(1 + \frac{R_{FB}}{R_{G2}} + \frac{R_{FB}}{R_{G1}}\right) V_{DAC} - \frac{R_{FB}}{R_{G2}} V_{REF} \tag{6}$$

8.2.2.1.1 Passive Component Selection

The amplifier in this circuit uses negative feedback to ensure that the voltages at the inverting and non-inverting terminals are equal. When the DAC output is at zero scale (0 V) the inverting terminal is a virtual ground so no current flows across R_{G1}; this causes the circuit to function as an inverting amplifier with gain equal to R_{FB} / R_{G2}. When the DAC output is full-scale (V_{REF}) the inverting terminal potential is equal to V_{REF} so no current flows across R_{G2}; this causes the circuit to function as a non-inverting amplifier with gain equal to (1 + R_{FB} / R_{G1}). A simple three-step process can be used to select the resistor values used to realize any bipolar output range using DAC8560. The internal V_{REF} value is 2.5 V. The desired output range for this design is ±10 V. First, using the transfer function shown in Equation 6, consider the negative full-scale output case when V_{DAC} is equal to 0 V, V_{REF} is equal to 2.5 V, and V_{OUT} is equal to –10 V. This case is used to calculate the ratio of R_{FB} to R_{G2} and is shown explicitly in Equation 7.

$$-10\text{ V} = \left(1 + \frac{R_{FB}}{R_{G2}} + \frac{R_{FB}}{R_{G1}}\right)(0) - \frac{R_{FB}}{R_{G2}}(2.5\text{ V})$$

$$-10\text{ V} = -\frac{R_{FB}}{R_{G2}}(2.5\text{ V})$$

$$R_{FB} = 4 \times R_{G2} \tag{7}$$

Second, consider the positive full-scale output case when V_{DAC} is equal to 2.5 V, V_{REF} is equal to 2.5 V, and V_{OUT} is equal to 10 V. This case is used to calculate the ratio of R_{FB} to R_{G1} and is shown explicitly in Equation 8.

$$10\text{ V} = \left(1 + \frac{R_{FB}}{R_{G2}} + \frac{R_{FB}}{R_{G1}}\right)(2.5) - \frac{R_{FB}}{R_{G2}}(2.5\text{ V})$$

$$10\text{ V} = \left(1 + \frac{R_{FB}}{R_{G1}}\right)(2.5\text{ V})$$

$$R_{G1} = \frac{R_{FB}}{3} \tag{8}$$

Finally, seed the ideal value of R_{G2} to calculate the ideal values of R_{FB} and R_{G2}. The key considerations for seeding the value of R_{G2} should be the drive strength of the reference source as well as choosing small resistor values to minimize noise contributed by the resistor network. For this design R_{G2} of 8.25 kΩ was chosen, which limits the peak current drawn from the reference source to approximately 333 µA under nominal conditions, well within the 20-mA limit of the DAC8560. In this case the nearest, 0.1% tolerance, 0603 package values for each resistor are ideal.

Standard values for 0.1% resistors can be an obstacle for this design and it may take multiple iterations of seeding the values to find real components or they may not exist. Workarounds can include utilizing multiple resistors in series and/or parallel, using potentiometers for analog trim calibration, or providing extra gain in the output circuit and applying digital calibration. In systems where the output voltage must reach the design-goal end-points (±10 V) it may be desirable to apply additional gain to the circuit. This approach may contribute additional overall system error since the end-point errors vary from system to system. For this design, use the exact values calculated in the design process to keep error analysis easy to follow.

To deliver a near-universal cable drive solution, choose C_{LOAD} to be relatively large compared to typical cable capacitance such that its capacitance dominates the reactive load seen by the output amplifier. To drive larger capacitive loads R_{ISO}, C_{COMP}, and C_{LOAD} may need to be adjusted. An R_{ISO} of 70 Ω and C_{COMP} of 150 pF are used for this design.

Resistor matching for the op amp resistor network is critical for the success of this design; choose components with tight tolerances. For this design 0.1% resistor values are implemented but this constraint may be adjusted based on application specific design goals. Resistor matching contributes to both offset error and gain error in this design. The tolerance of stability components R_{ISO} and C_{COMP} is not critical and 1% components are acceptable.

Table 7. Values of Resistor Network

RESISTOR	VALUE
R_{G1}	11 kΩ
R^{G2}	8.25 kΩ
R_{FB}	33 kΩ

8.2.2.1.2 Amplifier Selection

Amplifier input offset voltage (V_{OS}) is a key consideration for this design. V_{OS} of an op amp is a typical data-sheet specification but in-circuit performance is also impacted by drift over temperature, the common-mode rejection ratio (CMRR), and power supply rejection ratio (PSRR). Thus, consider these parameters as well. For AC operation also consider slew rate and settling time. Input-bias current (IB) can also be a factor, but typically the resistor network is implemented with sufficiently small resistor values that the effects of input-bias current are negligible.

8.2.2.2 Microprocessor Interfacing

8.2.2.2.1 DAC8560 to 8051 Interface

See Figure 73 for a serial interface between the DAC8560 and a typical 8051-type microcontroller. The setup for the interface is as follows: TXD of the 8051 drives SCLK of the DAC8560, while RXD drives the serial data line of the device. The $\overline{SYNC}$ signal is derived from a bit-programmable pin on the port of the 8051. In this case, port line P3.3 is used. When data is to be transmitted to the DAC8560, P3.3 is taken LOW. The 8051 transmits data in 8-bit bytes; thus, only eight falling clock edges occur in the transmit cycle. To load data to the DAC, P3.3 is left LOW after the first eight bits are transmitted, then a second write cycle is initiated to transmit the second byte of data. P3.3 is taken HIGH following the completion of the third write cycle. The 8051 outputs the serial data in a format which has the LSB first. The DAC8560 requires its data with the MSB as the first bit received. The 8051 transmit routine must therefore take this into account, and *mirror* the data as needed.

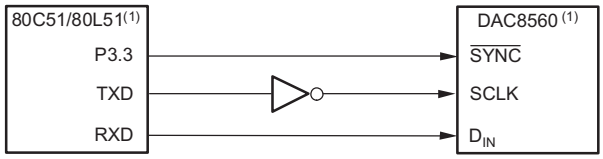

NOTE: (1) Additional pins omitted for clarity.

Figure 73. DAC8560 to 80C51/80L51 Interface

8.2.2.2.2 DAC8560 to Microwire Interface

Figure 74 shows an interface between the DAC8560 and any Microwire compatible device. Serial data is shifted out on the falling edge of the serial clock and is clocked into the DAC8560 on the rising edge of the SK signal.

Copyright © 2006–2018, Texas Instruments Incorporated

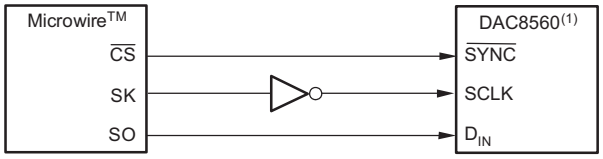

NOTE: (1) Additional pins omitted for clarity.

Figure 74. DAC8560 to Microwire Interface

8.2.2.2.3 DAC8560 to 68HC11 Interface

Figure 75 shows a serial interface between the DAC8560 and the 68HC11 microcontroller. SCK of the 68HC11 drives the SCLK of the DAC8560, while the MOSI output drives the serial data line of the DAC. The $\overline{\text{SYNC}}$ signal is derived from a port line (PC7), similar to the 8051 diagram.

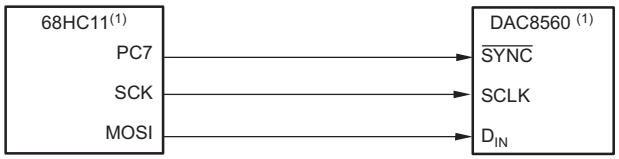

NOTE: (1) Additional pins omitted for clarity.

Figure 75. DAC8560 to 68HC11 Interface

Configure the 68HC11 so that its CPOL bit is 0, and its CPHA bit is 1. This configuration causes data appearing on the MOSI output to be valid on the falling edge of SCK. When data is being transmitted to the DAC, the $\overline{\text{SYNC}}$ line is held LOW (PC7). Serial data from the 68HC11 is transmitted in 8-bit bytes with only eight falling clock edges occurring in the transmit cycle. (Data is transmitted MSB first.) In order to load data to the DAC8560, PC7 is left LOW after the first eight bits are transferred, then a second and third serial write operation is performed to the DAC. PC7 is taken HIGH at the end of this procedure.

8.2.3 Application Curves

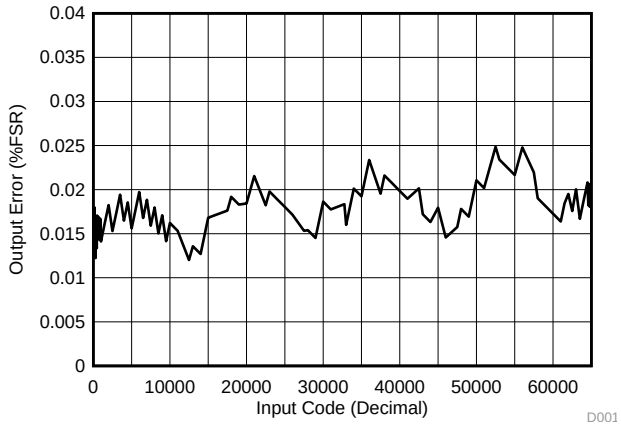

Figure 76. Output Voltage Error vs Input Code

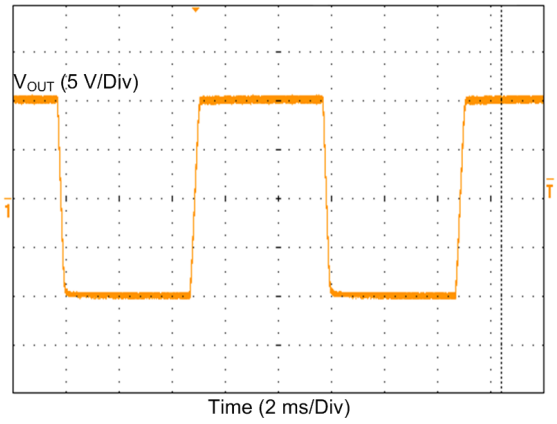

Figure 77. Full-Scale Step Response

9 Power Supply Recommendations

The DAC8560 can operate within the specified supply voltage range of 2.7 V to 5.5 V. The power applied to VDD must be well-regulated and low-noise. Switching power supplies and DC-DC converters often have high-frequency glitches or spikes riding on the output voltage. In addition, digital components can create similar high-frequency spikes. This noise can easily couple into the DAC output voltage through various paths between the power connections and analog output. In order to further minimize noise from the power supply, TI strongly recommends a 1-µF to 10-µF capacitor and 0.1-µF bypass capacitor. The current consumption on the VDD pin, the short-circuit current limit, and the load current for the device is listed in *Electrical Characteristics*. The power supply must meet the aforementioned current requirements.

10 Layout

10.1 Layout Guidelines

A precision analog component requires careful layout, adequate bypassing, and clean, well-regulated power supplies.

The DAC8560 offers single-supply operation, and it often is used in close proximity with digital logic, microcontrollers, microprocessors, and digital signal processors. The more digital logic present in the design and the higher the switching speed, the more difficult it is to keep digital noise from appearing at the output.

As a result of the single ground pin of the DAC8560, all return currents, including digital and analog return currents for the DAC, must flow through a single point. Ideally, connect GND directly to an analog ground plane. This plane would be separate from the ground connection for the digital components until they were connected at the power-entry point of the system.

The power applied to V_{DD} must be well regulated and low noise. Switching power supplies and DC-DC converters often have high-frequency glitches or spikes riding on the output voltage. In addition, digital components can create similar high-frequency spikes as their internal logic switches states. This noise can easily couple into the DAC output voltage through various paths between the power connections and analog output.

As with the GND connection, connect V_{DD} to a power-supply plane or trace that is separate from the connection for digital logic until they are connected at the power-entry point. In addition, a 1-µF to 10-µF capacitor and 0.1-µF bypass capacitor are strongly recommended. In some situations, additional bypassing may be required, such as a 100-µF electrolytic capacitor or even a *Pi* filter made up of inductors and capacitors – all designed to essentially low-pass filter the supply, removing the high-frequency noise.

10.2 Layout Example

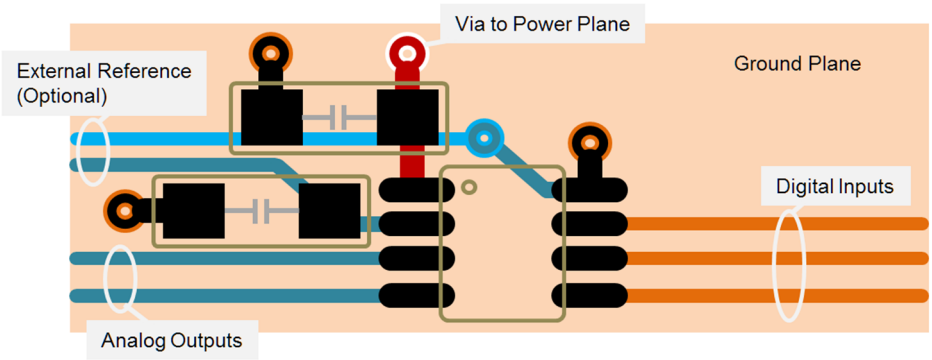

Figure 78. DAC8560 Layout Example

Copyright © 2006–2018, Texas Instruments Incorporated

11 Device and Documentation Support

11.1 Documentation Support

11.1.1 Related Documentation

CMOS, Rail-to-Rail, I/O OPERATIONAL AMPLIFIERS

11.2 Receiving Notification of Documentation Updates

To receive notification of documentation updates, navigate to the device product folder on ti.com. In the upper right corner, click on *Alert me* to register and receive a weekly digest of any product information that has changed. For change details, review the revision history included in any revised document.

11.3 Community Resource

The following links connect to TI community resources. Linked contents are provided "AS IS" by the respective contributors. They do not constitute TI specifications and do not necessarily reflect TI's views; see TI's Terms of Use.

TI E2E™ Online Community ***TI's Engineer-to-Engineer (E2E) Community.*** Created to foster collaboration among engineers. At e2e.ti.com, you can ask questions, share knowledge, explore ideas and help solve problems with fellow engineers.

Design Support ***TI's Design Support*** Quickly find helpful E2E forums along with design support tools and contact information for technical support.

11.4 Trademarks

E2E is a trademark of Texas Instruments.
All other trademarks are the property of their respective owners.

11.5 Electrostatic Discharge Caution

These devices have limited built-in ESD protection. The leads should be shorted together or the device placed in conductive foam during storage or handling to prevent electrostatic damage to the MOS gates.

11.6 Glossary

SLYZ022 — *TI Glossary*.

This glossary lists and explains terms, acronyms, and definitions.

12 Mechanical, Packaging, and Orderable Information

The following pages include mechanical, packaging, and orderable information. This information is the most current data available for the designated devices. This data is subject to change without notice and revision of this document. For browser-based versions of this data sheet, refer to the left-hand navigation.

PACKAGING INFORMATION

Orderable part number	Status (1)	Material type (2)	Package | Pins	Package qty | Carrier	RoHS (3)	Lead finish/ Ball material (4)	MSL rating/ Peak reflow (5)	Op temp (°C)	Part marking (6)
DAC8560IADGKR	Active	Production	VSSOP (DGK) | 8	2500 | LARGE T&R	Yes	Call TI	Level-2-260C-1 YEAR	-40 to 105	D860
DAC8560IADGKR.A	Active	Production	VSSOP (DGK) | 8	2500 | LARGE T&R	Yes	Call TI	Level-2-260C-1 YEAR	-40 to 105	D860
DAC8560IADGKRG4	Active	Production	VSSOP (DGK) | 8	2500 | LARGE T&R	Yes	Call TI	Level-2-260C-1 YEAR	-40 to 105	D860
DAC8560IADGKT	Active	Production	VSSOP (DGK) | 8	250 | SMALL T&R	Yes	Call TI	Level-2-260C-1 YEAR	-40 to 105	D860
DAC8560IADGKT.A	Active	Production	VSSOP (DGK) | 8	250 | SMALL T&R	Yes	Call TI	Level-2-260C-1 YEAR	-40 to 105	D860
DAC8560IBDGKR	Active	Production	VSSOP (DGK) | 8	2500 | LARGE T&R	Yes	Call TI	Level-2-260C-1 YEAR	-40 to 105	D860
DAC8560IBDGKR.A	Active	Production	VSSOP (DGK) | 8	2500 | LARGE T&R	Yes	Call TI	Level-2-260C-1 YEAR	-40 to 105	D860
DAC8560IBDGKT	Active	Production	VSSOP (DGK) | 8	250 | SMALL T&R	Yes	Call TI	Level-2-260C-1 YEAR	-40 to 105	D860
DAC8560IBDGKT.A	Active	Production	VSSOP (DGK) | 8	250 | SMALL T&R	Yes	Call TI	Level-2-260C-1 YEAR	-40 to 105	D860
DAC8560ICDGKR	Active	Production	VSSOP (DGK) | 8	2500 | LARGE T&R	Yes	Call TI	Level-2-260C-1 YEAR	-40 to 105	D860
DAC8560ICDGKR.A	Active	Production	VSSOP (DGK) | 8	2500 | LARGE T&R	Yes	Call TI	Level-2-260C-1 YEAR	-40 to 105	D860
DAC8560ICDGKT	Active	Production	VSSOP (DGK) | 8	250 | SMALL T&R	Yes	Call TI	Level-2-260C-1 YEAR	-40 to 105	D860
DAC8560ICDGKT.A	Active	Production	VSSOP (DGK) | 8	250 | SMALL T&R	Yes	Call TI	Level-2-260C-1 YEAR	-40 to 105	D860
DAC8560ICDGKTG4	Active	Production	VSSOP (DGK) | 8	250 | SMALL T&R	Yes	Call TI	Level-2-260C-1 YEAR	-40 to 105	D860
DAC8560IDDGKR	Active	Production	VSSOP (DGK) | 8	2500 | LARGE T&R	Yes	Call TI	Level-2-260C-1 YEAR	-40 to 105	D860
DAC8560IDDGKR.A	Active	Production	VSSOP (DGK) | 8	2500 | LARGE T&R	Yes	Call TI	Level-2-260C-1 YEAR	-40 to 105	D860
DAC8560IDDGKT	Active	Production	VSSOP (DGK) | 8	250 | SMALL T&R	Yes	Call TI	Level-2-260C-1 YEAR	-40 to 105	D860
DAC8560IDDGKT.A	Active	Production	VSSOP (DGK) | 8	250 | SMALL T&R	Yes	Call TI	Level-2-260C-1 YEAR	-40 to 105	D860
DAC8560IDDGKTG4	Active	Production	VSSOP (DGK) | 8	250 | SMALL T&R	Yes	Call TI	Level-2-260C-1 YEAR	-40 to 105	D860

(1) **Status:** For more details on status, see our product life cycle.

(2) **Material type:** When designated, preproduction parts are prototypes/experimental devices, and are not yet approved or released for full production. Testing and final process, including without limitation quality assurance, reliability performance testing, and/or process qualification, may not yet be complete, and this item is subject to further changes or possible discontinuation. If available for ordering, purchases will be subject to an additional waiver at checkout, and are intended for early internal evaluation purposes only. These items are sold without warranties of any kind.

(3) **RoHS values:** Yes, No, RoHS Exempt. See the TI RoHS Statement for additional information and value definition.

(4) **Lead finish/Ball material:** Parts may have multiple material finish options. Finish options are separated by a vertical ruled line. Lead finish/Ball material values may wrap to two lines if the finish value exceeds the maximum column width.

(5) **MSL rating/Peak reflow:** The moisture sensitivity level ratings and peak solder (reflow) temperatures. In the event that a part has multiple moisture sensitivity ratings, only the lowest level per JEDEC standards is shown. Refer to the shipping label for the actual reflow temperature that will be used to mount the part to the printed circuit board.

(6) **Part marking:** There may be an additional marking, which relates to the logo, the lot trace code information, or the environmental category of the part.

Multiple part markings will be inside parentheses. Only one part marking contained in parentheses and separated by a "~" will appear on a part. If a line is indented then it is a continuation of the previous line and the two combined represent the entire part marking for that device.

Important Information and Disclaimer: The information provided on this page represents TI's knowledge and belief as of the date that it is provided. TI bases its knowledge and belief on information provided by third parties, and makes no representation or warranty as to the accuracy of such information. Efforts are underway to better integrate information from third parties. TI has taken and continues to take reasonable steps to provide representative and accurate information but may not have conducted destructive testing or chemical analysis on incoming materials and chemicals. TI and TI suppliers consider certain information to be proprietary, and thus CAS numbers and other limited information may not be available for release.

In no event shall TI's liability arising out of such information exceed the total purchase price of the TI part(s) at issue in this document sold by TI to Customer on an annual basis.

TAPE AND REEL INFORMATION

REEL DIMENSIONS

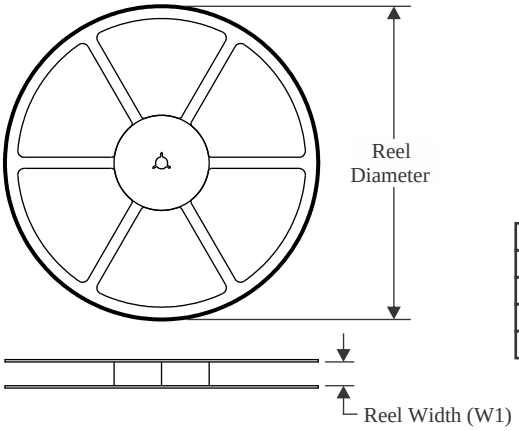

TAPE DIMENSIONS

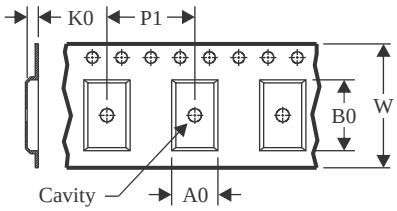

A0	Dimension designed to accommodate the component width
B0	Dimension designed to accommodate the component length
K0	Dimension designed to accommodate the component thickness
W	Overall width of the carrier tape
P1	Pitch between successive cavity centers

QUADRANT ASSIGNMENTS FOR PIN 1 ORIENTATION IN TAPE

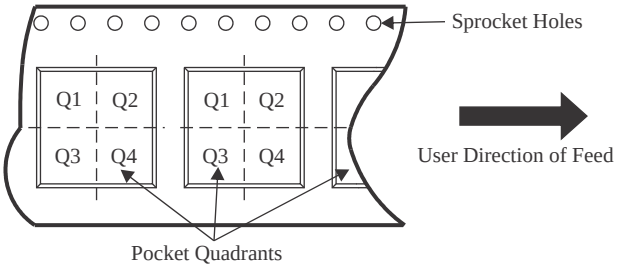

*All dimensions are nominal

Device	Package Type	Package Drawing	Pins	SPQ	Reel Diameter (mm)	Reel Width W1 (mm)	A0 (mm)	B0 (mm)	K0 (mm)	P1 (mm)	W (mm)	Pin1 Quadrant
DAC8560IADGKR	VSSOP	DGK	8	2500	330.0	12.4	5.3	3.4	1.4	8.0	12.0	Q1
DAC8560IADGKT	VSSOP	DGK	8	250	180.0	12.4	5.3	3.4	1.4	8.0	12.0	Q1
DAC8560IBDGKR	VSSOP	DGK	8	2500	330.0	12.4	5.3	3.4	1.4	8.0	12.0	Q1
DAC8560IBDGKT	VSSOP	DGK	8	250	180.0	12.4	5.3	3.4	1.4	8.0	12.0	Q1

TAPE AND REEL BOX DIMENSIONS

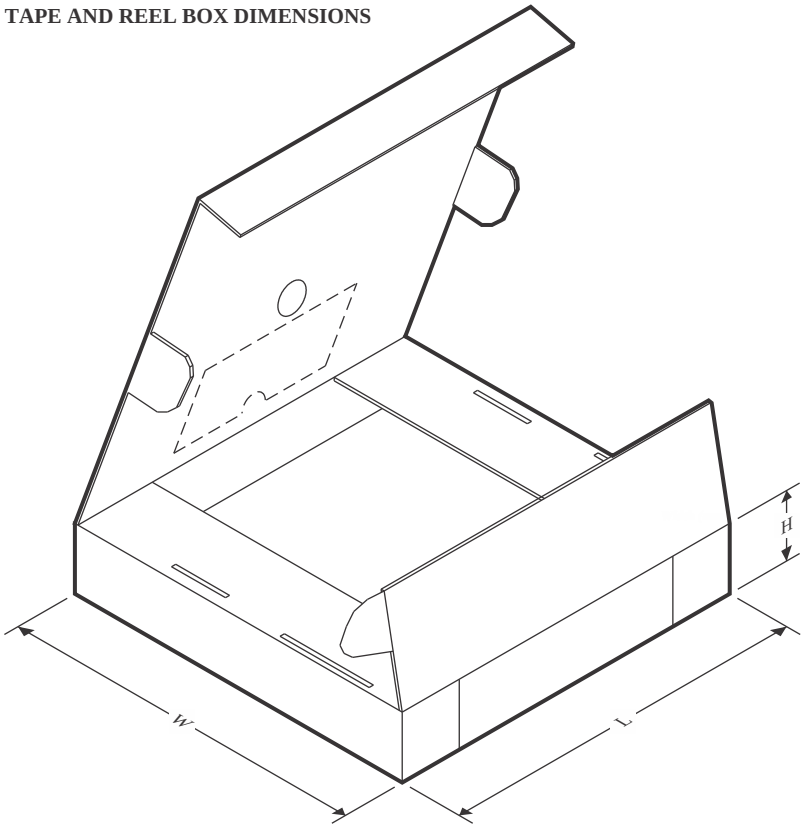

*All dimensions are nominal

Device	Package Type	Package Drawing	Pins	SPQ	Length (mm)	Width (mm)	Height (mm)
DAC8560IADGKR	VSSOP	DGK	8	2500	350.0	350.0	43.0
DAC8560IADGKT	VSSOP	DGK	8	250	210.0	185.0	35.0
DAC8560IBDGKR	VSSOP	DGK	8	2500	350.0	350.0	43.0
DAC8560IBDGKT	VSSOP	DGK	8	250	210.0	185.0	35.0

PACKAGE OUTLINE

DGK0008A

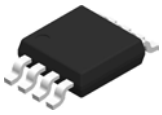

VSSOP - 1.1 mm max height

SMALL OUTLINE PACKAGE

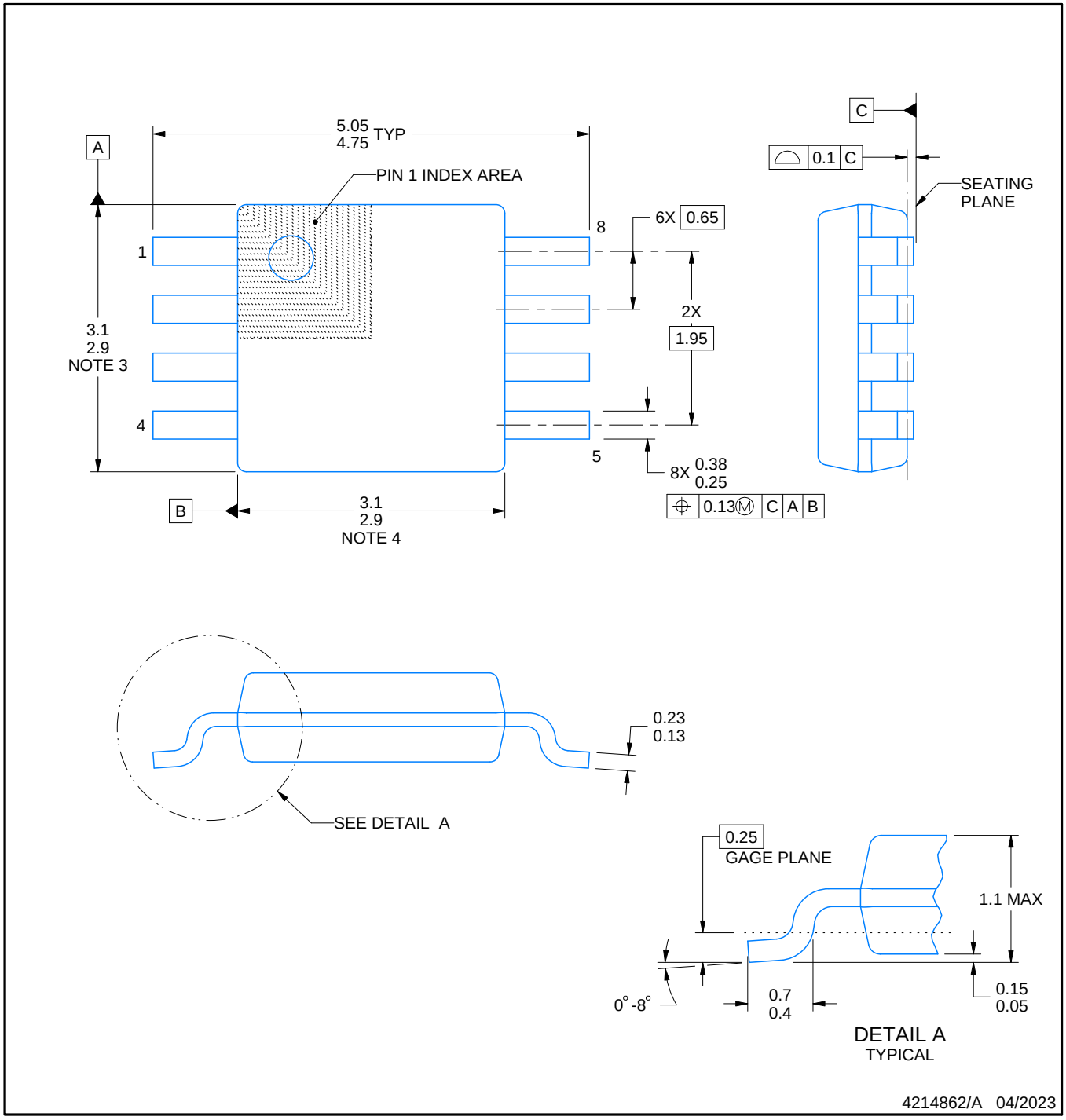

PowerPAD is a trademark of Texas Instruments.

NOTES:

1. All linear dimensions are in millimeters. Any dimensions in parenthesis are for reference only. Dimensioning and tolerancing per ASME Y14.5M.
2. This drawing is subject to change without notice.
3. This dimension does not include mold flash, protrusions, or gate burrs. Mold flash, protrusions, or gate burrs shall not exceed 0.15 mm per side.
4. This dimension does not include interlead flash. Interlead flash shall not exceed 0.25 mm per side.
5. Reference JEDEC registration MO-187.

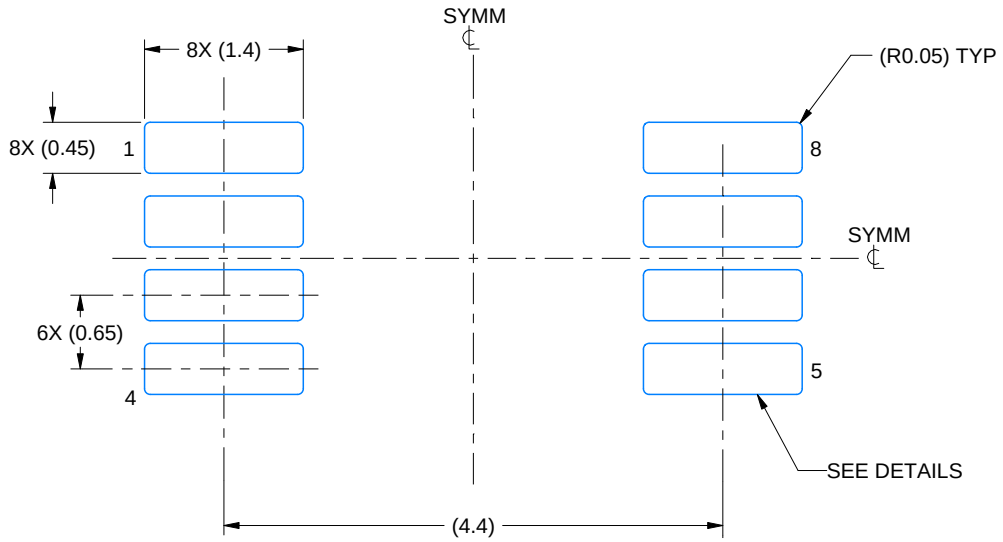

LAND PATTERN EXAMPLE
EXPOSED METAL SHOWN
SCALE: 15X

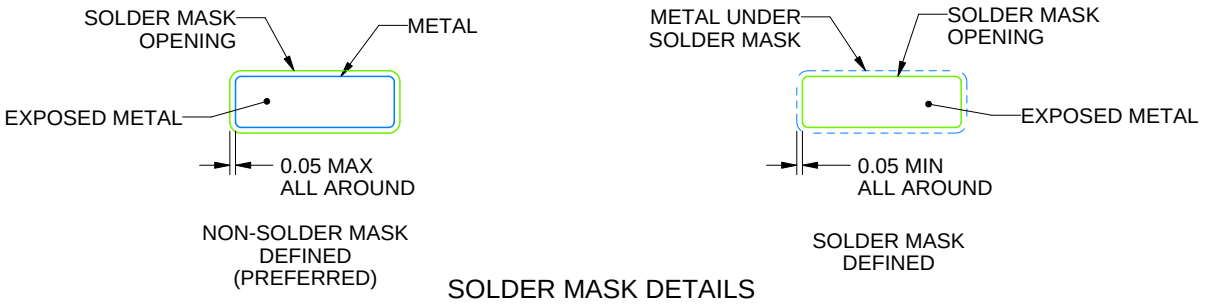

SOLDER MASK DETAILS

4214862/A 04/2023

NOTES: (continued)

6. Publication IPC-7351 may have alternate designs.
7. Solder mask tolerances between and around signal pads can vary based on board fabrication site.
8. Vias are optional depending on application, refer to device data sheet. If any vias are implemented, refer to their locations shown on this view. It is recommended that vias under paste be filled, plugged or tented.
9. Size of metal pad may vary due to creepage requirement.

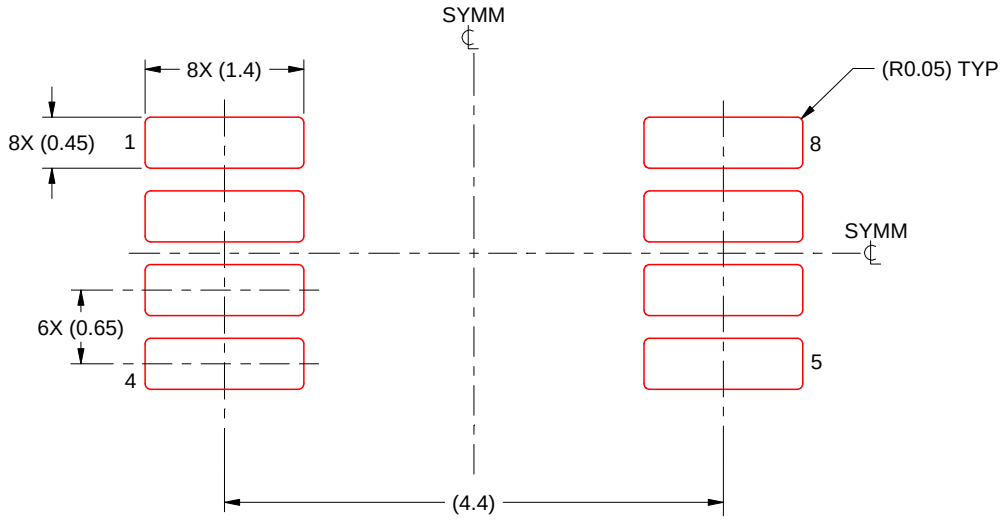

SOLDER PASTE EXAMPLE
SCALE: 15X

4214862/A 04/2023

NOTES: (continued)

11. Laser cutting apertures with trapezoidal walls and rounded corners may offer better paste release. IPC-7525 may have alternate design recommendations.
12. Board assembly site may have different recommendations for stencil design.

IMPORTANT NOTICE AND DISCLAIMER

TI PROVIDES TECHNICAL AND RELIABILITY DATA (INCLUDING DATASHEETS), DESIGN RESOURCES (INCLUDING REFERENCE DESIGNS), APPLICATION OR OTHER DESIGN ADVICE, WEB TOOLS, SAFETY INFORMATION, AND OTHER RESOURCES “AS IS” AND WITH ALL FAULTS, AND DISCLAIMS ALL WARRANTIES, EXPRESS AND IMPLIED, INCLUDING WITHOUT LIMITATION ANY IMPLIED WARRANTIES OF MERCHANTABILITY, FITNESS FOR A PARTICULAR PURPOSE OR NON-INFRINGEMENT OF THIRD PARTY INTELLECTUAL PROPERTY RIGHTS.

These resources are intended for skilled developers designing with TI products. You are solely responsible for (1) selecting the appropriate TI products for your application, (2) designing, validating and testing your application, and (3) ensuring your application meets applicable standards, and any other safety, security, regulatory or other requirements.

These resources are subject to change without notice. TI grants you permission to use these resources only for development of an application that uses the TI products described in the resource. Other reproduction and display of these resources is prohibited. No license is granted to any other TI intellectual property right or to any third party intellectual property right. TI disclaims responsibility for, and you fully indemnify TI and its representatives against any claims, damages, costs, losses, and liabilities arising out of your use of these resources.

TI’s products are provided subject to TI’s Terms of Sale, TI’s General Quality Guidelines, or other applicable terms available either on ti.com or provided in conjunction with such TI products. TI’s provision of these resources does not expand or otherwise alter TI’s applicable warranties or warranty disclaimers for TI products. Unless TI explicitly designates a product as custom or customer-specified, TI products are standard, catalog, general purpose devices.

TI objects to and rejects any additional or different terms you may propose.

Copyright © 2025, Texas Instruments Incorporated

Last updated 10/2025