ML60.242

PULS 60 Watt Series / 24VDC / 2.50 Amps Industrial Single Output DIN-Rail Power Supply



FEATURES

- 100-240V Wide Range Input
- NEC Class 2 Compliant
- Adjustable Output Voltage
- Efficiency up to 90.4%
- Low No-load Losses and Excellent Partial-load Efficiency
- Compact Design
- Electronic Inrush Current Limitation
- Large International Approval Package
- Operating Temperature: -40°C to 70°C
- 5-Year Warranty

INTRODUCTION

A compact size, light weight, simple mounting onto the DIN-rail and the utilization of only quality components are what makes the MiniLine power supplies so easy to use and install within seconds.

A rugged electrical and mechanical design as well as a high immunity against electrical disturbances on the mains provides reliable output power. This offers superior protection for equipment which is connected to the public mains network or is exposed to a critical industrial environment.

The MiniLine series offers output voltages from 5 to 56VDC and a power rating from 15W to 120W.

The specialty of the ML60.242 is the electronic inrush current limitation and the suitability for very low ambient temperatures. The unit is fully specified down to -40°C.

DIMENSIONS

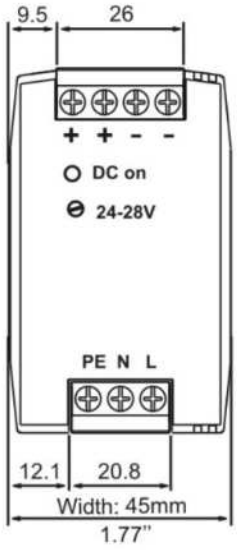

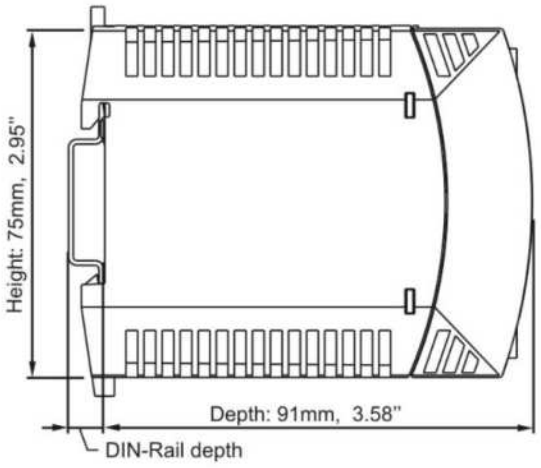

SPECIFICATIONS

PROPERTIES		
Output Voltage	DC 24V	
Adjustment Range	24 - 28V	
Output Current	2.5A at 24V 2.1A at 28V	
Output Power	60W	
Output Ripple	< 50mVpp	20Hz to 20MHz
Input Voltage	AC 100-240V	-15% / +10%
Mains Frequency	50-60Hz	±6%
AC Input Current	1.05 / 0.66A	at 120 / 230Vac
Power Factor	0.54 / 0.44	at 120 / 230Vac
AC Inrush Current	typ. 6A	Input voltage and temperature independent
DC Input	88-375Vdc	Below 100Vdc derating required
Efficiency Losses	88.5 / 90.4% 7.8 / 6.4W	at 120 / 230Vac at 120 / 230Vac
Temperature Range	-40°C to 70°C	operational
Derating	1.5W/°C	60°C to 70°C
Hold-up Time	typ. 24 / 107ms	at 120 / 230Vac
Dimensions	45 x 75 x 91mm	W x H x D
Weight	250g / 0.55lb	

ORDERING INFORMATION

ML60.242 PULS 60 Watt Series / 24VDC / 2.50 Amps Industrial Single Output DIN-Rail Power Supply