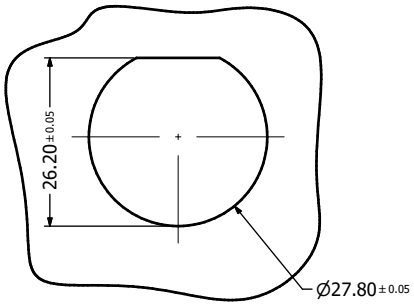


Recommended Single-D
Panel Cutout

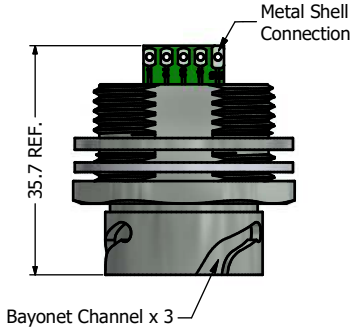


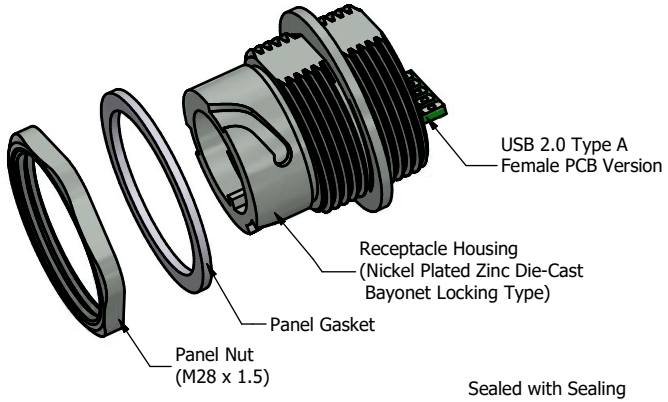


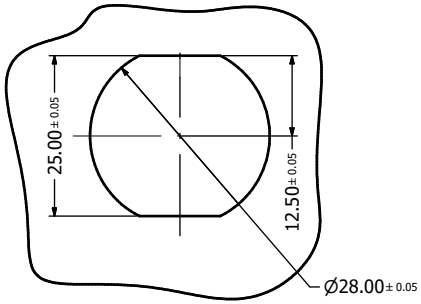


Recommanded Double-D
Panel Cutout

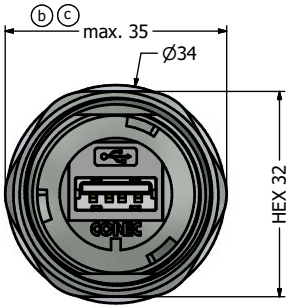


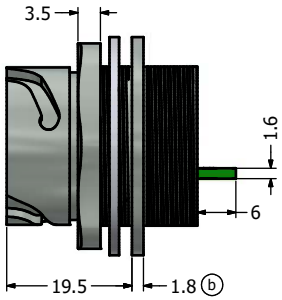


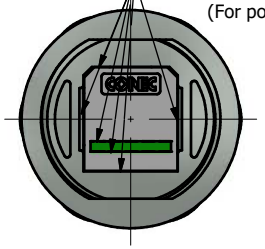


**Notes:**

1. Electrical Specifications:
   - Meets USB 2.0 Specification
   - Contact Resistance: 30 mOhm max.
   - Insulation Resistance: 1000 MOhm min. @ 100 VDC
   - Current Rating: 1.5 A max. at 25˚C
   - Working Voltage: 30 V (RMS) max.
   - DWV: 500 VAC/60s at sea level
   - Operating Temperature: -40˚C to +85˚C
2. Material and Finish:
   - Receptacle Housing: Zinc Die-Cast, Nickel Plated
   - Panel Nut: Brass, Finish: Nickel Plated
   - Panel Gasket: Silicon, Color: White
   - USB Insulator: PBT, UL94 V-0, Black
   - USB Metal Shell: Copper Alloy, Nickel Plated
   - USB Overmold material: PBT UL94 V-0, Color: Black
   - USB Contacts: Copper Alloy, Finish: 30 u" Gold min. over Nickel
   - PCB: FR-4, UL94 V-0, Color: Green
3. Connector can be front or rear mounted to a maximum panel thickness of 3.2 mm.
4. (b) IP67 rated only in the mated and covered condition for unpotted version, but IP67 rated for both mated or uncoved condition for potted version.
5. Recommaned Mounting Panel Nut torque is 20 to 25 lb-inch

RoHS compliant

**Pin to typical USB Cable Wiring Assignment**

| Type A F | PCB | Signal Name | USB Cable |
|---|---|---|---|
| Pin1 | Pin1 | V**BUS** | Red |
| Pin2 | Pin2 | D- | White |
| Pin3 | Pin3 | D+ | Green |
| Pin4 | Pin4 | GND | Black |
| Shell | GND | GND | Drain Wire |

| Description | Part Number |
|---|---|
| Nickel Plated Zinc Die-Cast with USB 2.0 Type A Female PCB | 17-210151 |
| Potted Nickel Plated Zinc Die-Cast with USB 2.0 Type A Female PCB | 17-210161 |

THIS DRAWING MAY NOT BE COPIED OR REPRODUCED IN ANY WAY AND MAY NOT BE PASSED ON TO A THIRD PARTY WITHOUT WRITTEN PERMISSION. OWNERSHIP AND COPYRIGHT OF CONEC CORPORATION

DOT NOT ALTER CAD DRAWING BY HAND

| Rev. | Changes | Date | Name |
|---|---|---|---|
| 1 x c | A21-0426 | 03.11.2021 | Bub |
| b | 3 x b | Oct/10/2013 | Vincent Ke |
| a | original | | |

Customer:

| Name | Title | Approval Date |
|---|---|---|
| | | |

Tolerance
Unless otherwise specified
0 PLC ±0.50
1 PLC ±0.38
2 PLC ±0.25
3 PLC ±0.10
ANGLES ±3°

Autodesk Inventor

| 2012 | Date | Name |
|---|---|---|
| Draw. | Oct. 09 | Vincent Ke |
| Appd. | Oct. 09 | J. Chaudry |
| Norm | | |
| D-old | | |

CONEC®

Scale: Dim. in mm

Material: See Notes

Title: Receptacle Assembly Kit with Nickel Plated Die-Cast Housing with USB 2.0 Type A Female PCB Version

Drawing No.: 17K1A365

DIN A3

Part No.: SEE PART NUMBER TABLE

Sheet 1/1