Panasonic
INDUSTRY

Microwave Devices

RA RELAYS

Product Catalog

IN Your Future

2024.7

RoHS

RA RELAYS

1 GHz capable, 3 W carrying power (at 1 GHz), 50 Ω, 2 Form C relays

Protective construction : Sealed type

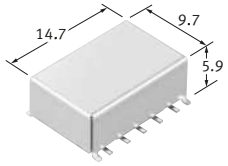

(Unit : mm)

FEATURES

- Excellent high frequency characteristics (50 Ω, up to 1 GHz)
- Small size:
  9.7 (W) × 14.7 (L) × 5.9 (H) mm
- High sensitivity: 140 mW rated operating power (single side stable and 2 coil latching)

TYPICAL APPLICATIONS

- Communication and measurement equipment

Note) If you consider using applications with low level loads or with high frequency switching, please consult us.

HIGH FREQUENCY CHARACTERISTICS

■ 50 Ω (Initial)

Frequency		Up to 1 GHz
V.S.W.R. (Max.)		1.2
Insertion loss (dB, Max.)		0.3
Isolation (dB, Min.)	Between open contacts	20
	Between contact sets	30

ORDERING INFORMATION (PART NO.)

ARA 2 0 A

- Operating function
  0 : Single side stable
  1 : 1 coil latching
  2 : 2 coil latching
- Terminal shape
  A : Surface-mount terminal
- Packing style
  Nil : Tube packing
  X : Tape and reel packing(picked from 1 pin side)
  Z : Tape and reel packing(picked from 10 pin side)
- Contact arrangement
  2 : 2 Form C
- Type of operation
  0 : Standard type(B.B.M)
- Rated coil voltage, V DC
  1H : 1.5 V, 03 : 3 V, 4H : 4.5 V, 05 : 5 V, 06 : 6 V, 09 : 9 V, 12 : 12 V, 24 : 24 V, 48 : 48 V
  (H=0.5)

Notes : 1. 48 V coil type : Single side stable only
2. Packing style symbol "X", "Z" is not marked on the relay.

©Panasonic Industry Co., Ltd. 2024

TYPES

■ Surface-mount terminal

● Tube packing

Contact arrangement	Rated coil voltage	Part No.			Standard packing	
		Single side stable	1 coil latching	2 coil latching	Inner carton (1-tube)	Outer carton
2 Form C	1.5 V DC	ARA200A1H	ARA210A1H	ARA220A1H	40 pcs.	1,000 pcs.
	3 V DC	ARA200A03	ARA210A03	ARA220A03		
	4.5 V DC	ARA200A4H	ARA210A4H	ARA220A4H		
	5 V DC	ARA200A05	ARA210A05	ARA220A05		
	6 V DC	ARA200A06	ARA210A06	ARA220A06		
	9 V DC	ARA200A09	ARA210A09	ARA220A09		
	12 V DC	ARA200A12	ARA210A12	ARA220A12		
	24 V DC	ARA200A24	ARA210A24	ARA220A24		
	48 V DC	ARA200A48	-	-		

● Tape and reel packing Z

Contact arrangement	Rated coil voltage	Part No.			Standard packing	
		Single side stable	1 coil latching	2 coil latching	Inner carton (1-reel)	Outer carton
2 Form C	1.5 V DC	ARA200A1HZ	ARA210A1HZ	ARA220A1HZ	500 pcs.	1,000 pcs.
	3 V DC	ARA200A03Z	ARA210A03Z	ARA220A03Z		
	4.5 V DC	ARA200A4HZ	ARA210A4HZ	ARA220A4HZ		
	5 V DC	ARA200A05Z	ARA210A05Z	ARA220A05Z		
	6 V DC	ARA200A06Z	ARA210A06Z	ARA220A06Z		
	9 V DC	ARA200A09Z	ARA210A09Z	ARA220A09Z		
	12 V DC	ARA200A12Z	ARA210A12Z	ARA220A12Z		
	24 V DC	ARA200A24Z	ARA210A24Z	ARA220A24Z		
	48 V DC	ARA200A48Z	-	-		

RATING

■ Coil data

- Operating characteristics such as " Operate voltage " and " Release voltage " are influenced by mounting conditions, ambient temperature, etc.
  Therefore, please use the relay within ±5 % of rated coil voltage.
- " Initial " means the condition of products at the time of delivery.

● Single side stable

Rated coil voltage	Operate voltage* (at 20 ℃)	Release voltage* (at 20 ℃)	Rated operating current (±10 %, at 20 ℃)	Coil resistance (±10 %, at 20 ℃)	Rated operating power	Max. allowable voltage (at 20 ℃)
1.5 V DC	Max. 75 % V of rated coil voltage (Initial)	Min. 10 % V of rated coil voltage (Initial)	93.8 mA	16 Ω	140 mW	150 % V of rated coil voltage
3 V DC			46.7 mA	64.3 Ω		
4.5 V DC			31 mA	145 Ω		
5 V DC			28.1 mA	178 Ω		
6 V DC			23.3 mA	257 Ω		
9 V DC			15.5 mA	579 Ω		
12 V DC			11.7 mA	1,028 Ω		
24 V DC			8.3 mA	2,880 Ω	200 mW	
48 V DC			6.3 mA	7,680 Ω	300 mW	120 % V of rated coil voltage

*Square, pulse drive

©Panasonic Industry Co., Ltd. 2024

● 1 coil latching

Rated coil voltage	Set voltage* (at 20 ℃)	Reset voltage* (at 20 ℃)	Rated operating current (±10 %, at 20 ℃)	Coil resistance (±10 %, at 20 ℃)	Rated operating power	Max. allowable voltage (at 20 ℃)
1.5 V DC	Max. 75 % V of rated coil voltage (Initial)	Max. 75 % V of rated coil voltage (Initial)	46.9 mA	32 Ω	70 mW	150 % V of rated coil voltage
3 V DC			23.3 mA	128.6 Ω		
4.5 V DC			15.6 mA	289.3 Ω		
5 V DC			14 mA	357 Ω		
6 V DC			11.7 mA	514 Ω		
9 V DC			7.8 mA	1,157 Ω		
12 V DC			5.8 mA	2,057 Ω		
24 V DC			4.2 mA	5,760 Ω	100 mW	

*Square, pulse drive

● 2 coil latching

Rated coil voltage	Set voltage* (at 20 ℃)	Reset voltage* (at 20 ℃)	Rated operating current (±10 %, at 20 ℃)	Coil resistance (±10 %, at 20 ℃)	Rated operating power	Max. allowable voltage (at 20 ℃)
1.5 V DC	Max. 75 % V of rated coil voltage (Initial)	Max. 75 % V of rated coil voltage (Initial)	93.8 mA	16 Ω	140 mW	150 % V of rated coil voltage
3 V DC			46.7 mA	64.3 Ω		
4.5 V DC			31 mA	145 Ω		
5 V DC			28.1 mA	178 Ω		
6 V DC			23.3 mA	257 Ω		
9 V DC			15.5 mA	579 Ω		
12 V DC			11.7 mA	1,028 Ω		
24 V DC			8.3 mA	2,880 Ω	200 mW	

*Square, pulse drive

■ Specifications

Item		Specifications
Contact data	Contact arrangement	2 Form C
	Contact resistance (initial)	Max. 75 mΩ (by voltage drop 6 V DC 1 A)
	Contact material	Ag alloy / Au-clad Ag alloy
	Contact rating (resistive)	10 mA 10 V DC, 1 A 30 V DC
	Contact input power (CW)	3 W (1 GHz, 50 Ω, V.S.W.R. Max. 1.2)
	Max. switching voltage	30 V DC
	Max. switching current	1 A (DC)
Insulation resistance (initial)		Min. 100 MΩ (at 500 V DC, Measured portion is the same as the case of dielectric strength.)
Dielectric strength (initial)	Between open contacts	750 V rms for 1 min (detection current: 10 mA)
	Between contact and coil	1,000 V rms for 1 min (detection current: 10 mA)
	Between contact sets	1,000 V rms for 1 min (detection current: 10 mA)
	Between contact and earth terminal	1,000 V rms for 1 min (detection current: 10 mA)
Time characteristics (initial)	Operate [Set] time	Max. 4 ms at rated coil voltage (at 20 ℃, without bounce) [Max. 4 ms (at 20 ℃, without bounce)]
	Release [Reset] time	Max. 4 ms at rated coil voltage (at 20 ℃, without bounce, without diode) [Max. 4 ms (at 20 ℃, without bounce)]
Shock resistance	Functional	500 m/s² (half-sine shock pulse: 11 ms, detection time: 10 μs)
	Destructive	1,000 m/s² (half-sine shock pulse: 6 ms)
Vibration resistance	Functional	10 to 55 Hz (at double amplitude of 3 mm, detection time: 10 μs)
	Destructive	10 to 55 Hz (at double amplitude of 5 mm)
Expected life	Mechanical life (Cold switch)	Min. 100 x 10^6 ope. (switching frequency: at 180 times/min)
Conditions	Conditions for usage, transport and storage*	Ambient temperature: −40 to +85 ℃ (Allowable temperature is from −40 to +70 ℃ at our standard packing condition) Humidity: 5 to 85 % RH (Avoid icing and condensation)
Unit weight		Approx. 2 g

*For ambient temperature, please read " GUIDELINES FOR RELAY USAGE " .

■ Expected electrical life (hot switch)

Conditions: Resistive load, switching frequency at 20 times/min

Type	Load	Switching capacity	Number of operations
2 Form C	Resistive load	10 mA 10 V DC	Min. 10 × 10^6 ope.
		1 A 30 V DC	Min. 100 × 10^3 ope.

©Panasonic Industry Co., Ltd. 2024

REFERENCE DATA

1-1. High frequency characteristics (50 Ω)

Sample : ARA200A12
Measuring method : Measured by using our PC board for measurement and HP network analyzer(HP8753C).

V.S.W.R.

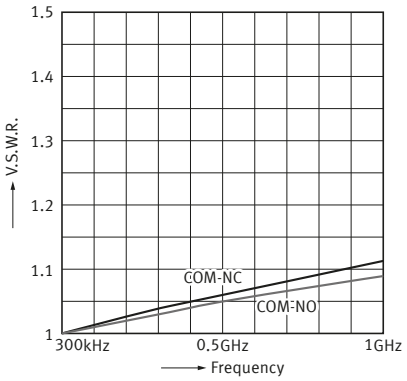

Insertion loss

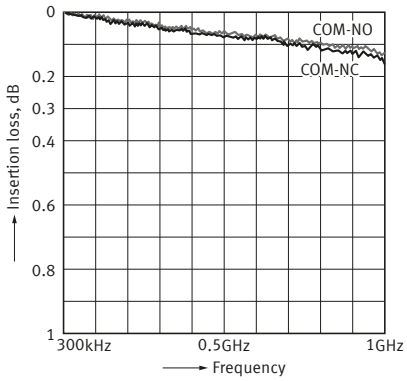

Isolation

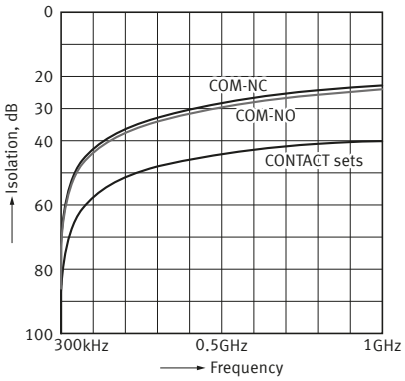

1-2. High frequency characteristics (75 Ω)

Sample : ARA200A12
Measuring method : See “Measuring method” under “NOTES”.

V.S.W.R.

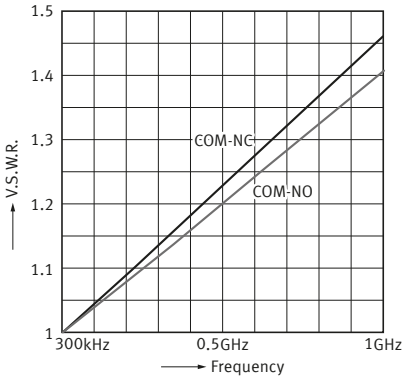

Insertion loss

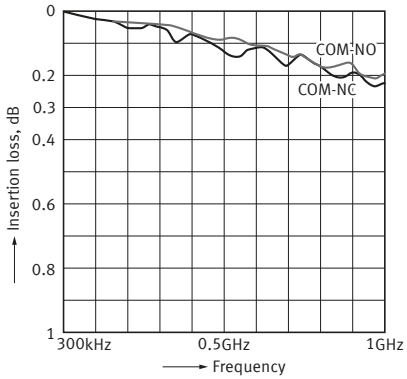

Isolation

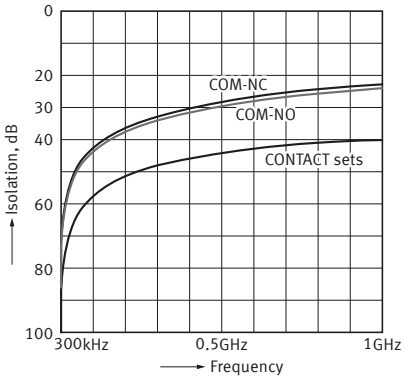

©Panasonic Industry Co., Ltd. 2024

HIGH FREQUENCY CHARACTERISTICS MEASURING METHOD

■ 50 Ω

● Measuring method

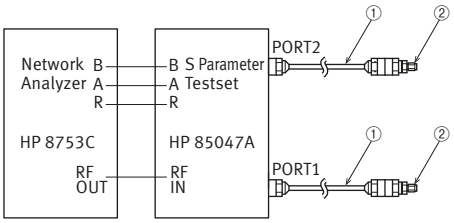

No.	Product name	Contents
1	HP 11857D	7 mm Test port, Extension cable, (APC7connector)
2	HP 11533A	Adapter, APC7-SMA (Male)

1) Connect connectors 1 and 2 respectively to PORT1 and PORT2.
   Perform calibration using the 3.5 mm calibration kit.
2) After calibration, connect the D.U.T board and measure.

● D.U.T board

Material	Glass PTFE (Double-sided, through hole) R-4737 (manufactured by our company)
Board thickness	t = 0.8 mm
Copper plating thickness	18 μm

Surface-mount terminal

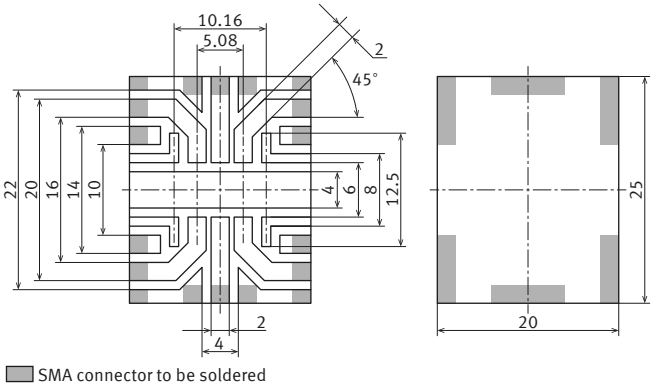

● Connector (SMA type connector)

Product name	R125 403 (RADIALL)

● Correction of insertion loss

The insertion loss of relay itself is given by subtracting the insertion loss of short-circuit the COM and the N.C. or N.O.

DIMENSIONS (Unit: mm)

CAD The CAD data of the products with a " CAD " mark can be downloaded from our Website.

■ Surface-mount terminal

● 50 Ω

CAD



External dimensions

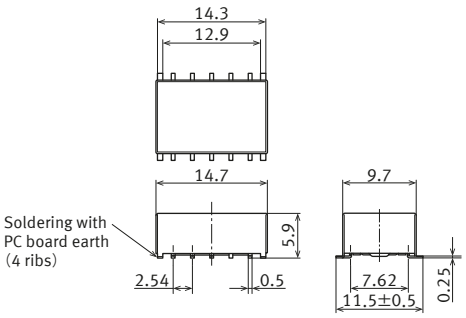

General tolerance : ±0.3

Recommended PC board pattern (TOP VIEW)

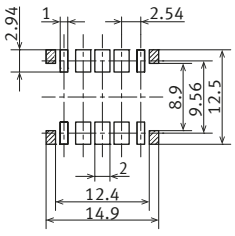

Tolerance : ±0.1

Schematic (TOP VIEW) Single side table (Deenergized)

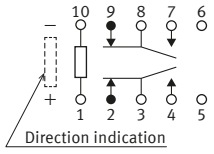

1 coil latching (Reset)

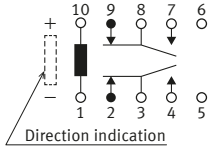

2 coil latching (Reset)

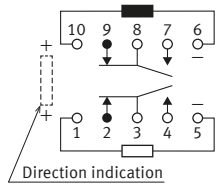

©Panasonic Industry Co., Ltd. 2024

PACKING STYLE (Unit: mm)

■ Tube packing

1) The relay is packed in a tube with the relay orientation mark on the left side, as shown in the figure.
2) Ambient temperature when transporting and during storage with the product in its our standard packaging: −40 to +70 ℃

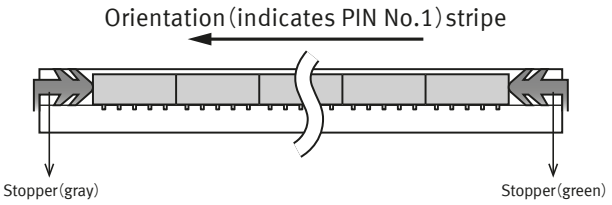

■ Tape and reel packing

1) Tape dimensions

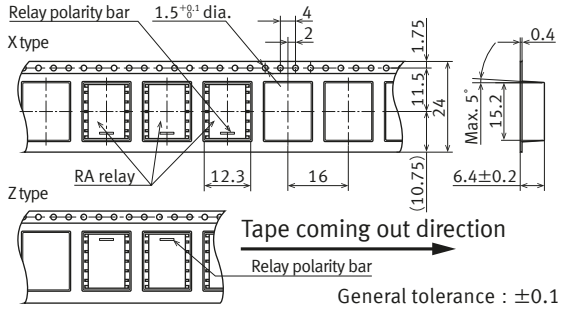

2) Dimensions of plastic reel

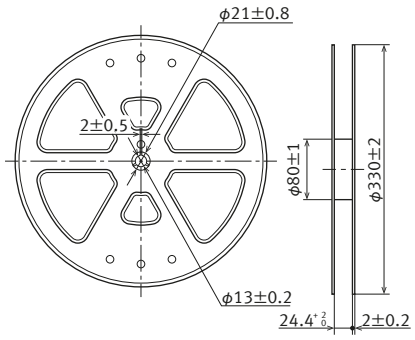

3) Ambient temperature when transporting and during storage with the product in its our standard packaging: −40 to +70 ℃

EXAMPLE OF RECOMMENDED SOLDERING CONDITIONS

■ For cautions for use, please read " SMT Soldering Guidelines " .

■ Surface-mount terminal

In case of automatic soldering (reflow), the following conditions should be observed.

● IRS (infrared reflow soldering method) heating conditions

	Recommend conditions
Number of reflow	1 time
Measuring position	Surface of PC board where relay is mounted.

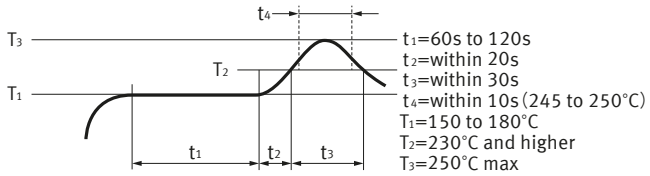

Measuring position of temperature profile

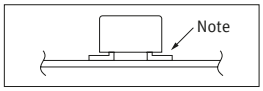

Note : The soldering temperature profile indicates the pad temperature. In some cases, the ambient temperature may be greatly increased. Check for the specific mounting condition.

● Mounting cautions

Cautions to observe when mounting temperature increases in the relay are greatly dependent on the way different parts are located a PC board and the heating method of the reflow device. Therefore, please conduct testing on the actual device beforehand after making sure the parts soldered on the relay terminals and the top of the relay case are within the temperature conditions.

©Panasonic Industry Co., Ltd. 2024

GUIDELINES FOR USAGE

■ For cautions for use, please read " GUIDELINES FOR MICROWAVE DEVICES USAGE " and " GUIDELINES FOR RELAY USAGE " .

■ Cautions for usage of RA relays

● Latching

- We recommend latching type when using in applications which involve lengthy duty cycles.
- Regarding the set and reset pulse time, for the purpose of reliable operation under ambient temperature fluctuations and different operating conditions, we recommend setting the coil applied set and reset pulse time to 10 ms or more at the rated coil voltage.
- The latching type relay is shipped in the reset position. But jolts during transport or impacts during installation can change the reset position. It is, therefore, advisable to build a circuit in which the relay can be initialized (set and reset) just after turning on the power.

● External magnetic field

- Since RA relays are highly sensitive polarized relays, their characteristics will be affected by a strong external magnetic field. Avoid using the relay under that condition.

CONDITIONS FOR USE

■ Conditions for operation, transport and storage conditions

During usage, storage, or transportation, avoid locations subject to direct sunlight and maintain normal temperature, humidity, and pressure conditions.

● Temperature and humidity

When transporting or storing relays while they are tube packaged, there are cases when the temperature may differ from the allowable range. In this situation, be sure to consult the individual specifications.

The humidity range varies with the temperature. Use within the range indicated in the graph. (The allowable temperature depends on the relays.)

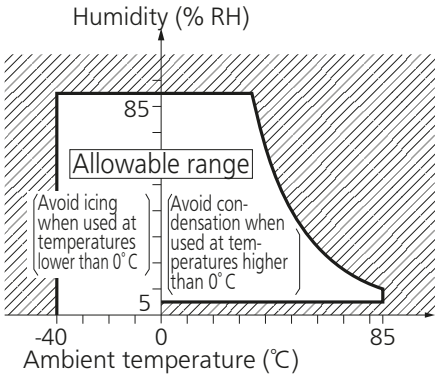

©Panasonic Industry Co., Ltd. 2024

GUIDELINES FOR MICROWAVE DEVICES USAGE

■For cautions for use, please read " GUIDELINES FOR RELAY USAGE ".
https://industry.panasonic.com/global/en/products/control/relay/cautions_use

Precautions for Coil Input

■ Long term current carrying

A circuit that will be carrying a current continuously for long periods without relay or microwave device switching operation.
(circuits for emergency lamps, alarm devices and error inspection that, for example, revert only during malfunction and output warnings with form B contacts) Continuous, long-term current to the coil will facilitate deterioration of coil insulation and characteristics due to heating of the coil itself.
For circuits such as these, please use a magnetic-hold type latching relay. If you need to use a single stable relay, use a sealed type relay that is not easily affected by ambient conditions and make a failsafe circuit design that considers the possibility of contact failure or disconnection.

■ DC Coil operating power

Steady state DC current should be applied to the coil. The wave form should be rectangular. If it includes ripple, the ripple factor should be less than 5 %.
However, please check with the actual circuit since the electrical characteristics may vary. The rated coil voltage should be applied to the coil and the set/reset pulse time of latching type relay differs for each relay, please refer to the relay's individual specifications.

■ Coil connection

When connecting coils of polarized relays, please check coil polarity (+, −) at the internal connection diagram (Schematic). If any wrong connection is made, it may cause unexpected malfunction, like abnormal heat, fire and so on, and circuit do not work. Avoid impressing voltages to the set coil and reset coil at the same time.

■ Maximum allowable voltage and temperature rise

Proper usage requires that the rated coil voltage be impressed on the coil. Note, however, that if a voltage greater than or equal to the maximum continuous voltage is impressed on the coil, the coil may burn or its layers short due to the temperature rise. Furthermore, do not exceed the usable ambient temperature range listed in the catalog.

●Maximum allowable voltage for coil

In addition to being a requirement for relay operation stability, the maximum continuous impressed coil voltage is an important constraint for the prevention of such problems as thermal deterioration or deformity of the insulation material, or the occurrence of fire hazards.

●Operate voltage change due to coil temperature rise (Hot start)

In DC relays, after continuous passage of current in the coil, if the current is turned OFF, then immediately turned ON again, due to the temperature rise in the coil, the operate voltage will become somewhat higher. Also, it will be the same as using it in a higher temperature atmosphere. The resistance/temperature relationship for copper wire is about 0.4 % for 1 ℃, and with this ratio the coil resistance increases. That is, in order to operate of the relay, it is necessary that the voltage be higher than the operate voltage and the operate voltage rises in accordance with the increase in the resistance value. However, for some polarized relays, this rate of change is considerably smaller.

©Panasonic Industry Co., Ltd. 2024

Ambient Environment

● Dew condensation

Condensation occurs when the ambient temperature drops suddenly from a high temperature and humidity, or the relay and microwave device is suddenly transferred from a low ambient temperature to a high temperature and humidity. Condensation causes the failures like insulation deterioration, wire disconnection and rust etc. Panasonic Industry Co., Ltd. does not guarantee the failures caused by condensation.
The heat conduction by the equipment may accelerate the cooling of device itself, and the condensation may occur.
Please conduct product evaluations in the worst condition of the actual usage. (Special attention should be paid when high temperature heating parts are close to the device. Also please consider the condensation may occur inside of the device.)

● Icing

Condensation or other moisture may freeze on relays when the temperature become lower than 0 ℃.This icing causes the sticking of movable portion, the operation delay and the contact conduction failure etc. Panasonic Industry Co., Ltd. does not guarantee the failures caused by the icing.
The heat conduction by the equipment may accelerate the cooling of relay itself and the icing may occur. Please conduct product evaluations in the worst condition of the actual usage.

● Low temperature and low humidity

The plastic becomes brittle if the switch is exposed to a low temperature, low humidity environment for long periods of time.

● High temperature and high humidity

Storage for extended periods of time (including transportation periods) at high temperature or high humidity levels or in atmospheres with organic gases or sulfide gases may cause a sulfide film or oxide film to form on the surfaces of the contacts and/or it may interfere with the functions. Check out the atmosphere in which the units are to be stored and transported.

● Package

In terms of the packing format used, make every effort to keep the effects of moisture, organic gases and sulfide gases to the absolute minimum.

● Storage requirements

Since the surface-mount terminal type is sensitive to humidity it is packaged with tightly sealed anti-humidity packaging. However, when storing, please be careful of the following.

1) Please use promptly once the anti-humidity pack is opened. (within 72 hours, Max. 30 ℃/70 % RH) .
If left with the pack open, the relay will absorb moisture which will cause thermal stress when reflow mounting and thus cause the case to expand.
As a result, the seal may break.

2) If relays will not be used within 72 hours, please store relays in a humidity controlled desiccator or in an anti-humidity bag to which silica gel has been added.
Note) If the relay is to be soldered after it has been exposed to excessive humidity atmosphere, cracks and leaks can occur. Be sure to mount the relay under the required mounting conditions.

3) The following cautionary label is affixed to the anti-humidity pack.

Caution

This vacuum-sealed bag contains

Moisture Sensitive Products

After this bag is opened, the product must be used

within 72 hours

If product is not used within 72 hours, baking is necessary.

For baking conditions please contact us.

©Panasonic Industry Co., Ltd. 2024

● Silicon

When a source of silicone substances (silicone rubber, silicone oil, silicone coating materials and silicone filling materials etc.) is used around the relay, the silicone gas (low molecular siloxane etc.) may be produced.
This silicone gas may penetrate into the inside of the relay. When the relay is kept and used in this condition, silicone compound may adhere to the relay contacts which may cause the contact failure. Do not use any sources of silicone gas around the relay (Including plastic sealed types).

● NOx Generation

When relay is used in an atmosphere high in humidity to switch a load which easily produces an arc, the NOx created by the arc and the water absorbed from outside the relay combine to produce nitric acid.
This corrodes the internal metal parts and adversely affects operation.
Avoid use at an ambient humidity of 85 %RH or higher (at 20 ℃). If use at high humidity is unavoidable, please contact our sales representative.

Others

■ Cleaning

- Although the environmentally sealed type relay (plastic sealed type, etc.) can be cleaned, avoid immersing the relay into cold liquid (such as cleaning solvent) immediately after soldering. Doing so may deteriorate the sealing performance.
- Surface-mount terminal type relay is sealed type and it can be cleaned by immersion. Use pure water or alcohol-based cleaning solvent.
- Cleaning with the boiling method is recommended (The temperature of cleaning liquid should be 40 ℃ or lower). Avoid ultrasonic cleaning on relays. Use of ultrasonic cleaning may cause breaks in the coil or slight sticking of the contacts due to the ultrasonic energy.

Please refer to **" the latest product specifications "** when designing your product.
• Requests to customers:
https://industry.panasonic.com/global/en/salespolicies

©Panasonic Industry Co., Ltd. 2024

■ Global Sales Network Information: industry.panasonic.com/global/en/salesnetwork/globalnetwork

Panasonic
INDUSTRY

Panasonic Industry Co., Ltd.
Electromechanical Control Business Division
■1006, Oaza Kadoma, Kadoma-shi, Osaka 571-8506, Japan
industry.panasonic.com

©Panasonic Industry Co., Ltd. 2024

Specifications are subject to change without notice.
ASCTB102E 202407
2024.7