© 2026 TE Connectivity. All Rights Reserved.

REVISIONS					
P	LTR	DESCRIPTION	DATE	DWN	APVD
	B7	PART STATUS CHANGE TO DISCONTINUNACE	16JUL2026	NS	PS

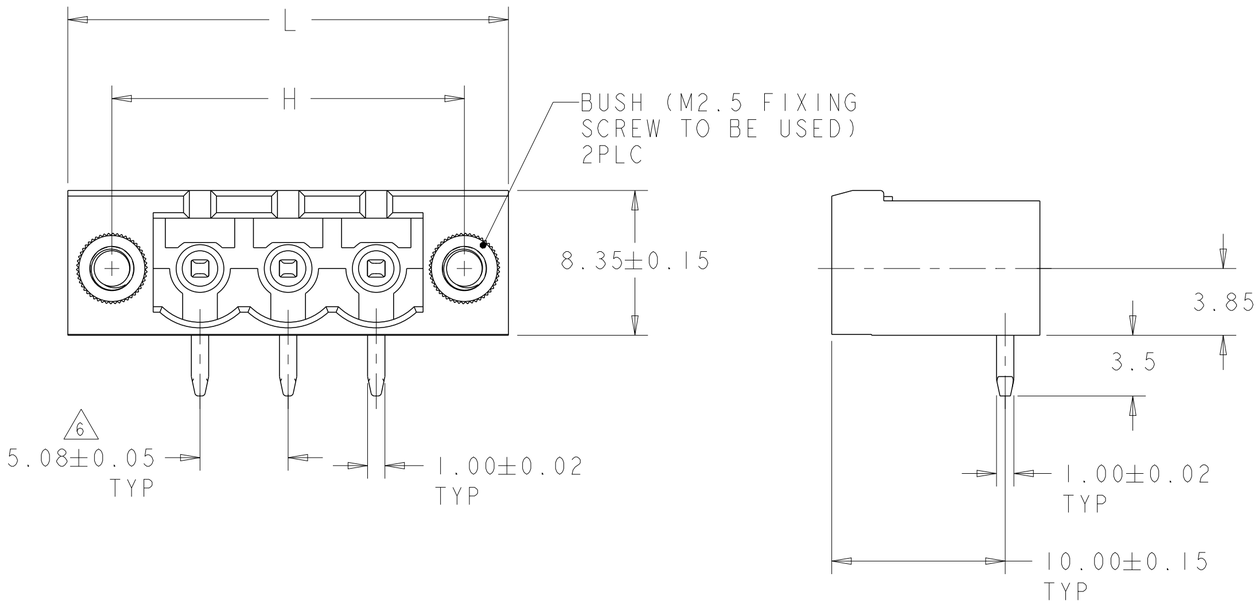

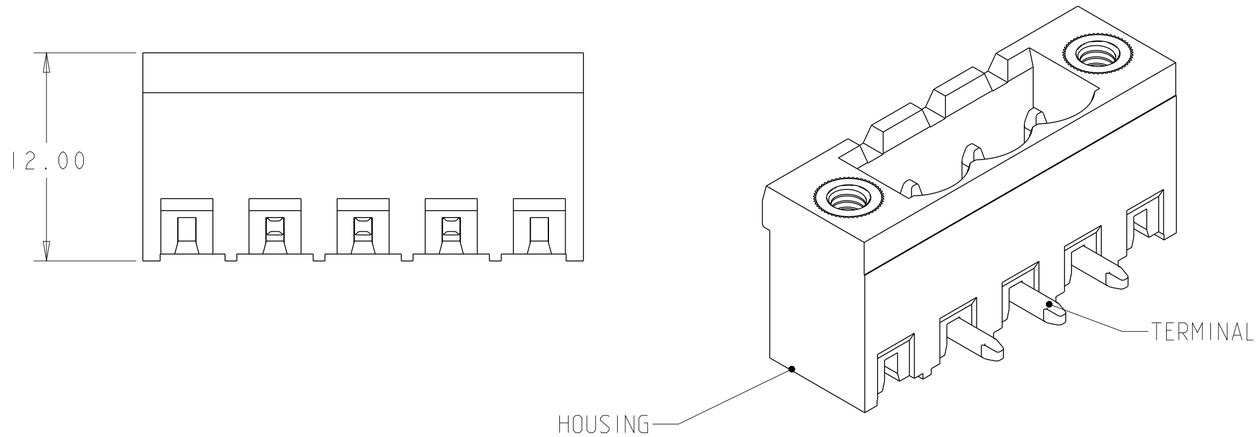

796866-3 AS SHOWN

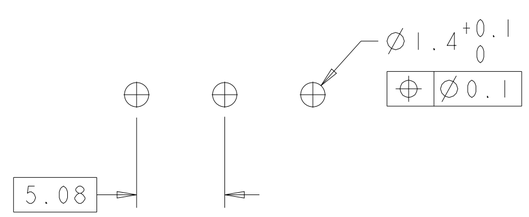

RECOMMENDED PC BOARD LAYOUT

NOTES:

1. MATERIALS AND FINISH:
   HOUSING: PA 6-6, UL 94-V0, COLOR: SEE TABLE.
   TERMINAL: COPPER ALLOY, PLATING: SEE TABLE.
   BUSH : BRASS, NICKEL PLATED.

2. MECHANICAL
   MAX. INSERTION FORCE PER POLE : 3.0 N
   MIN. WITHDRAWAL FORCE PER POLE : 1.5 N
   MIN. PC BOARD HOLES DIAMETER : 1.4 mm
   MAX. PC BOARD THICKNESS : 2.4 mm.

3. ELECTRICAL
   WIRE RANGE : 12-30 AWG
   MAX. VOLTAGE : 300 V
   MAX CURRENT : 15 A
   CONTACT RESISTANCE : <15 m Ohm
   INSULATION RESISTANCE : >1000 M Ohm (500V DC)

4. OPERATING TEMPERATURE RANGE: -40°C TO +110°C

5. RECOGNIZED UNDER THE COMPONENT PROGRAM OF UNDERWRITERS LABORATORIES INC. FILE No. E60677.

6. NOT CUMULATIVE TOLERANCE.

OBSOLETE	ORANGE	TIN	35.48	30.48	5	2-796866-5
OBSOLETE	GREEN	0.2µm GOLD	35.48	30.48	5	2-796866-4
OBSOLETE	GREEN	TIN	126.92	121.92	23	2-796866-3
OBSOLETE	GREEN	TIN	121.84	116.84	22	2-796866-2
OBSOLETE	GREEN	TIN	116.76	111.76	21	2-796866-1
OBSOLETE	GREEN	TIN	111.68	106.68	20	2-796866-0
OBSOLETE	GREEN	TIN	106.60	101.60	19	1-796866-9
	GREEN	TIN	101.52	96.52	18	1-796866-8
	GREEN	TIN	96.44	91.44	17	1-796866-7
	GREEN	TIN	91.36	86.36	16	1-796866-6
OBSOLETE	GREEN	TIN	86.28	81.28	15	1-796866-5
	GREEN	TIN	81.20	76.20	14	1-796866-4
OBSOLETE	GREEN	TIN	76.12	71.12	13	1-796866-3
	GREEN	TIN	71.04	66.04	12	1-796866-2
	GREEN	TIN	65.96	60.96	11	1-796866-1
	GREEN	TIN	60.88	55.88	10	1-796866-0
	GREEN	TIN	55.80	50.80	9	796866-9
	GREEN	TIN	50.72	45.72	8	796866-8
	GREEN	TIN	45.64	40.64	7	796866-7
	GREEN	TIN	40.56	35.56	6	796866-6
	GREEN	TIN	35.48	30.48	5	796866-5
	GREEN	TIN	30.40	25.40	4	796866-4
	GREEN	TIN	25.32	20.32	3	796866-3
	GREEN	TIN	20.24	15.24	2	796866-2
	COLOR	TERMINAL PLATING	L	H	NO. OF POSN	PART NUMBER

THIS DRAWING IS A CONTROLLED DOCUMENT.

DIMENSIONS: mm

TOLERANCES UNLESS OTHERWISE SPECIFIED:
0 PLC ±-
1 PLC ±0.2
2 PLC ±0.25
3 PLC ±-
4 PLC ±-
ANGLES ±-

MATERIAL 1
FINISH 1

DWN S.WELDON 09FEB2001
CHK D.BIEVENOUR 09FEB2001
APVD D.BIEVENOUR 09FEB2001
PRODUCT SPEC -
APPLICATION SPEC -
WEIGHT -

TE Connectivity

NAME TERMINAL BLOCK HEADER ASSEMBLY, 90 DEGREE, WITH FLANGE, 5.08mm PITCH

SIZE	CAGE CODE	DRAWING NO	RESTRICTED TO
A2	00779	C-796866	-

CUSTOMER DRAWING | SCALE 4:1 | SHEET 1 OF 1 | REV B7

1471-9 (3/13)