CY62167DV30 MoBL®

16-Mbit (1 M × 16) Static RAM

Features

- Thin small outline package (TSOP-I) configurable as 1 M × 16 or as 2 M × 8 SRAM
- Wide voltage range: 2.2 V–3.6 V
- Ultra-low active power:
  Typical active current: 2 mA at f = 1 MHz
- Ultra-low standby power
- Easy memory expansion with $\overline{CE}_1$, CE_2 and $\overline{OE}$ features
- Automatic power-down when deselected
- Complementary metal oxide semiconductor (CMOS) for optimum speed / power
- Available in Pb-free and non Pb-free 48-ball very fine-pitch ball grid array (VFBGA) and 48-pin TSOP I package

Functional Description

The CY62167DV30 is a high-performance CMOS static RAM organized as 1M words by 16-bits. This device features advanced circuit design to provide ultra-low active current. This is ideal for providing More Battery Life™ (MoBL®) in portable applications such as cellular telephones. The device also has an automatic power-down feature that significantly reduces power consumption by 99% when addresses are not toggling. The device can also be put into standby mode when deselected ($\overline{CE}_1$ HIGH or CE_2 LOW or both $\overline{BHE}$ and $\overline{BLE}$ are HIGH). The input/output pins (I/O_0 through I/O_{15}) are placed in a high-impedance state when: deselected ($\overline{CE}_1$ HIGH or CE_2 LOW), outputs are disabled ($\overline{OE}$ HIGH), both Byte High Enable and Byte Low Enable are disabled ($\overline{BHE}$, $\overline{BLE}$ HIGH), or during a Write operation ($\overline{CE}_1$ LOW, CE_2 HIGH and $\overline{WE}$ LOW).

Writing to the device is accomplished by taking Chip Enables ($\overline{CE}_1$ LOW and CE_2 HIGH) and Write Enable ($\overline{WE}$) input LOW. If Byte Low Enable ($\overline{BLE}$) is LOW, then data from I/O pins (I/O_0 through I/O_7), is written into the location specified on the address pins (A_0 through A_{19}). If Byte High Enable ($\overline{BHE}$) is LOW, then data from I/O pins (I/O_8 through I/O_{15}) is written into the location specified on the address pins (A_0 through A_{19}).

Reading from the device is accomplished by taking Chip Enables ($\overline{CE}_1$ LOW and CE_2 HIGH) and Output Enable ($\overline{OE}$) LOW while forcing the Write Enable ($\overline{WE}$) HIGH. If Byte Low Enable ($\overline{BLE}$) is LOW, then data from the memory location specified by the address pins appear on I/O_0 to I/O_7. If Byte High Enable ($\overline{BHE}$) is LOW, then data from memory appear on I/O_8 to I/O_{15}. See the truth table at the back of this data sheet for a complete description of Read and Write modes.

For a complete list of related documentation, click here.

Logic Block Diagram

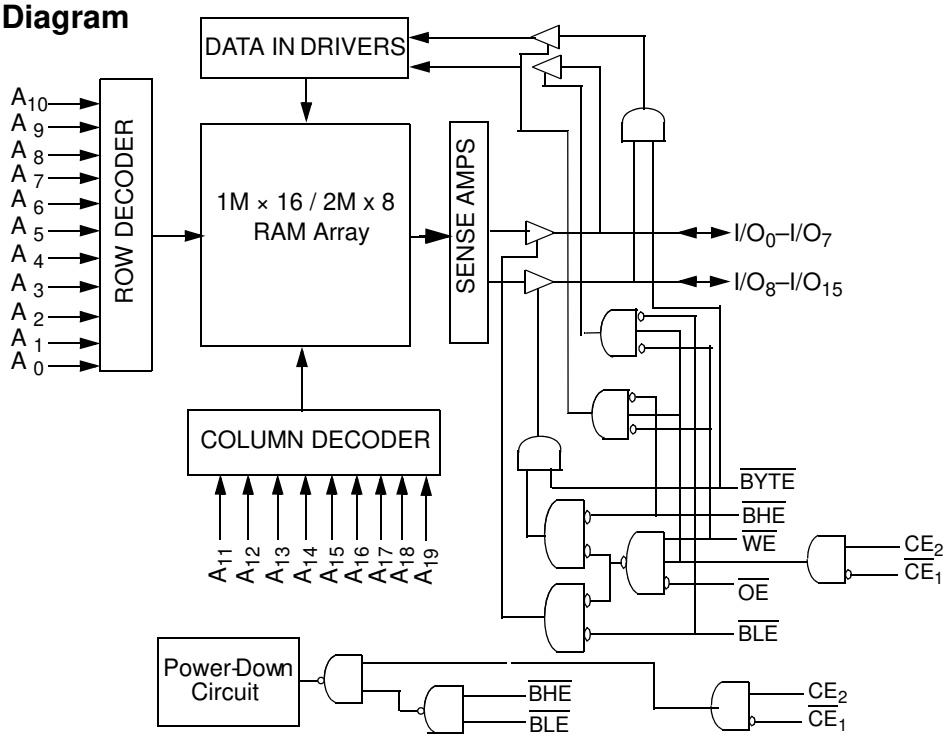

Contents

Product Portfolio **3**
Pin Configurations **3**
Maximum Ratings **4**
Operating Range **4**
Electrical Characteristics **4**
Capacitance **5**
Thermal Resistance **5**
AC Test Loads and Waveforms **5**
Data Retention Characteristics **6**
Data Retention Waveform **6**
Switching Characteristics **7**
Switching Waveforms **8**
Truth Table **12**
Ordering Information **13**
Ordering Code Definitions 13
Package Diagrams **14**
Acronyms **16**
Document Conventions **16**
Units of Measure 16
Document History Page **17**
Sales, Solutions, and Legal Information **18**
Worldwide Sales and Design Support 18
Products 18
PSoC® Solutions 18
Cypress Developer Community 18
Technical Support 18

Product Portfolio

Product	V_{CC} Range (V)			Speed (ns)	Power Dissipation					
					Operating I_{CC}(mA)				Standby I_{SB2}(µA)	
					f = 1 MHz		f = f_{Max}			
	Min	Typ [1]	Max		Typ [1]	Max	Typ [1]	Max	Typ [1]	Max
CY62167DV30LL	2.2	3.0	3.6	55	2	4	15	30	2.5	22
				70			12	25		

Pin Configurations

Figure 1. 48-ball VFBGA pinout (Top View) [2, 3]

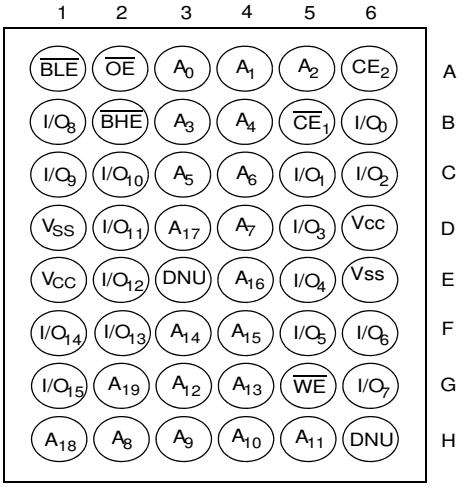

Figure 2. 48-pin TSOP I pinout (Top View) [4]

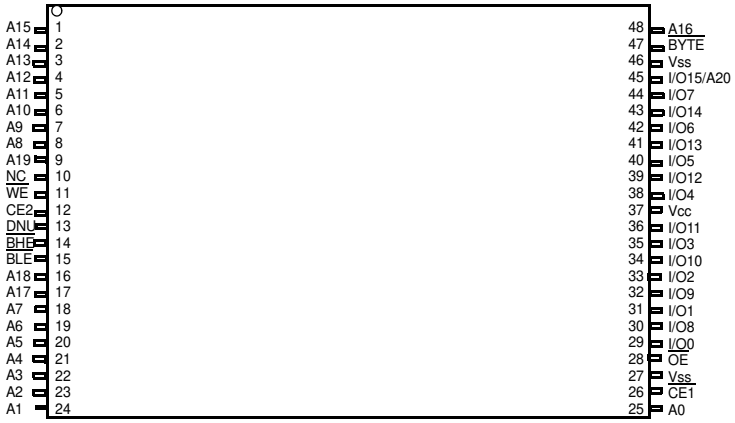

Notes
1. Typical values are included for reference only and are not guaranteed or tested. Typical values are measured at V_{CC} = $V_{CC(typ.)}$, T_A = 25 °C.
2. NC pins are not connected on the die.
3. DNU pins have to be left floating.
4. The BYTE pin in the 48-TSOP I package has to be tied to V_{CC} to use the device as a 1M X 16 SRAM. The 48-TSOP I package can also be used as a 2 M × 8 SRAM by tying the BYTE signal to V_{SS}. In the 2 M × 8 configuration, Pin 45 is A20, while BHE, BLE and I/O8 to I/O14 pins are not used (DNU).

Maximum Ratings

Exceeding maximum ratings may shorten the useful life of the device. User guidelines are not tested.

Storage temperature ..... –65 °C to +150 °C

Ambient temperature with power applied ..... –55 °C to +125 °C

Supply voltage to ground potential ..... –0.2 V to V_{CC} + 0.3 V

DC voltage applied to outputs in High-Z state [5, 6] ..... –0.2 V to V_{CC} + 0.3 V

DC input voltage [5, 6] ..... –0.2 V to V_{CC} + 0.3 V

Output current into outputs (LOW) ..... 20 mA

Static discharge voltage (per MIL-STD-883, Method 3015) ..... > 2001 V

Latch-up current ..... > 200 mA

Operating Range

Device	Range	Ambient Temperature	V_{CC}[7]
CY62167DV30LL	Industrial	–40 °C to +85 °C	2.20 V to 3.60 V

Electrical Characteristics

Over the Operating Range

Parameter	Description	Test Conditions		CY62167DV30-55			CY62167DV30-70			Unit
				Min	Typ [8]	Max	Min	Typ [8]	Max	
V_{OH}	Output HIGH voltage	I_{OH} = –0.1 mA	V_{CC} = 2.20 V	2.0	–	–	2.0	–	–	V
		I_{OH} = –1.0 mA	V_{CC} = 2.70 V	2.4			2.4			
V_{OL}	Output LOW voltage	I_{OL} = 0.1 mA	V_{CC} = 2.20 V	–	–	0.4		–	0.4	V
		I_{OL} = 2.1 mA	V_{CC} = 2.70 V							
V_{IH}	Input HIGH voltage	V_{CC} = 2.2 V to 2.7 V		1.8	–	V_{CC} + 0.3	1.8	–	V_{CC} + 0.3	V
		V_{CC} = 2.7 V to 3.6 V		2.2			2.2			
V_{IL}	Input LOW voltage	V_{CC} = 2.2 V to 2.7 V		–0.3	–	0.6	–0.3	–	0.6	V
		V_{CC}= 2.7 V to 3.6 V				0.8			0.8	
I_{IX}	Input leakage current	GND ≤ V_I ≤ V_{CC}		–1	–	+1	–1	–	+1	µA
I_{OZ}	Output leakage current	GND ≤ V_O ≤ V_{CC}, output disabled		–1	–	+1	–1	–	+1	µA
I_{CC}	V_{CC} operating supply current	V_{CC} = $V_{CC(max)}$ I_{OUT} = 0 mA CMOS levels	f = f_{Max} = $1/t_{RC}$	–	15	30	–	12	25	mA
			f = 1 MHz		2	4		2	4	
I_{SB1}	Automatic power-down current – CMOS inputs	$\overline{CE}_1$ ≥ V_{CC} – 0.2 V or CE_2 ≤ 0.2 V, V_{IN} ≥ V_{CC} – 0.2 V, V_{IN} ≤ 0.2 V, f = f_{Max} (address and data only), f = 0 ($\overline{OE}$, $\overline{WE}$), V_{CC} = 3.60 V		–	2.5	22	–	2.5	22	µA
I_{SB2}	Automatic power-down current – CMOS Inputs	$\overline{CE}_1$ ≥ V_{CC} – 0.2 V or CE_2 ≤ 0.2 V V_{IN} ≥ V_{CC} – 0.2 V or V_{IN} ≤ 0.2V, f = 0, V_{CC} = 3.60 V		–	2.5	22	–	2.5	22	µA

Notes
5. $V_{IL(min.)}$ = –2.0 V for pulse durations less than 20 ns.
6. $V_{IH(max)}$ = V_{CC} + 0.75 V for pulse durations less than 20 ns.
7. Full Device AC operation requires linear V_{CC} ramp from 0 to $V_{CC(min.)}$ and V_{CC} must be stable at $V_{CC(min)}$ for 500 µs.
8. Typical values are included for reference only and are not guaranteed or tested. Typical values are measured at V_{CC} = $V_{CC(typ)}$, T_A = 25 °C.

Capacitance

Parameter [10]	Description	Test Conditions	Max	Unit
C_{IN}	Input capacitance	T_A = 25 °C, f = 1 MHz, V_{CC} = $V_{CC(typ)}$	8	pF
C_{OUT}	Output capacitance		10	pF

Thermal Resistance

Parameter [10]	Description	Test Conditions	VFBGA	TSOP I	Unit
θ_{JA}	Thermal resistance (junction to ambient)	Still air, soldered on a 3 × 4.5 inch, 2-layer printed circuit board	55	60	°C/W
θ_{JC}	Thermal resistance (junction to case)		16	4.3	°C/W

AC Test Loads and Waveforms

Figure 3. AC Test Loads and Waveforms

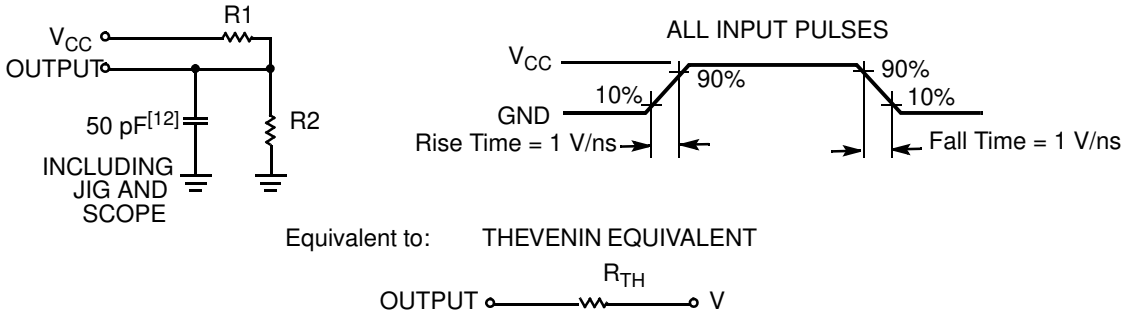

Parameters	2.5 V	3.0 V	Unit
R1	16667	1103	Ω
R2	15385	1554	Ω
R_{TH}	8000	645	Ω
V_{TH}	1.20	1.75	V

Data Retention Characteristics

Over the Operating Range

Parameter	Description	Conditions		Min	Typ [9]	Max	Unit
V_{DR}	V_{CC} for data retention			1.5	–	–	V
I_{CCDR}	Data retention current	V_{CC} = 1.5 V, $\overline{CE_1} \geq V_{CC} - 0.2$ V or $CE_2 \leq 0.2$ V, $V_{IN} \geq V_{CC} - 0.2$ V or $V_{IN} \leq 0.2$ V		–	–	10	µA
t_{CDR}[10]	Chip deselect to data retention time			0	–	–	ns
t_R[11]	Operation recovery time		CY62167DV30LL-55	55	–	–	ns
			CY62167DV30LL-70	70			

Data Retention Waveform

Figure 4. Data Retention Waveform [12]

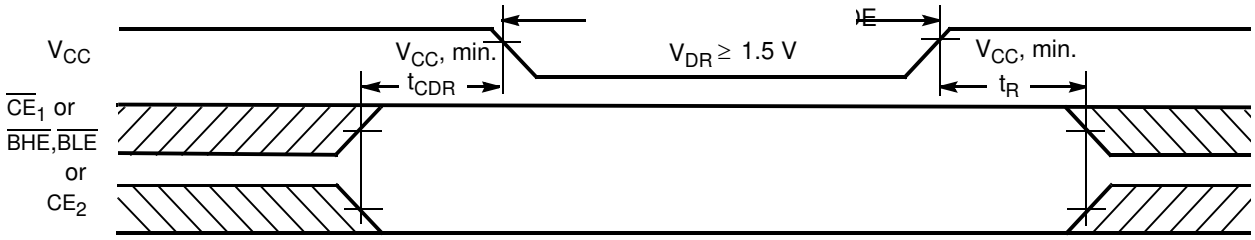

Notes

9. Typical values are included for reference only and are not guaranteed or tested. Typical values are measured at $V_{CC} = V_{CC(typ)}$, T_A = 25 °C.
10. Tested initially and after any design or process changes that may affect these parameters.
11. Full device operation requires linear V_{CC} ramp from V_{DR} to $V_{CC(min.)} \geq 100$ µs or stable at $V_{CC(min.)} \geq 100$ µs.
12. $\overline{BHE}.\overline{BLE}$ is the AND of both $\overline{BHE}$ and $\overline{BLE}$. Chip can be deselected by either disabling the chip enable signals or by disabling both $\overline{BHE}$ and $\overline{BLE}$.

Switching Characteristics

Over the Operating Range

Parameter [13]	Description	55 ns		70 ns		Unit
		Min	Max	Min	Max	
Read Cycle						
t_{RC}	Read cycle time	55	–	70	–	ns
t_{AA}	Address to data valid	–	55	–	70	ns
t_{OHA}	Data hold from address change	10	–	10	–	ns
t_{ACE}	$\overline{CE}_1$ LOW and CE_2 HIGH to data valid	–	55	–	70	ns
t_{DOE}	$\overline{OE}$ LOW to data valid	–	25	–	35	ns
t_{LZOE}	$\overline{OE}$ LOW to low Z [14]	5	–	5	–	ns
t_{HZOE}	$\overline{OE}$ HIGH to high Z [14, 15]	–	20	–	25	ns
t_{LZCE}	$\overline{CE}_1$ LOW and CE_2 HIGH to low Z [14]	10	–	10	–	ns
t_{HZCE}	$\overline{CE}_1$ HIGH and CE_2 LOW to high Z [14, 15]	–	20	–	25	ns
t_{PU}	$\overline{CE}_1$ LOW and CE_2 HIGH to power-up	0	–	0	–	ns
t_{PD}	$\overline{CE}_1$ HIGH and CE_2 LOW to power-down	–	55	–	70	ns
t_{DBE}	BLE/BHE LOW to data valid	–	55	–	70	ns
t_{LZBE}	$\overline{BLE}/\overline{BHE}$ LOW to low Z [14]	10	–	10	–	ns
t_{HZBE}	$\overline{BLE}/\overline{BHE}$ HIGH to high Z [14, 15]	–	20	–	25	ns
Write Cycle [16]						
t_{WC}	Write cycle time	55	–	70	–	ns
t_{SCE}	$\overline{CE}_1$ LOW and CE_2 HIGH to write end	40	–	60	–	ns
t_{AW}	Address setup to write end	40	–	60	–	ns
t_{HA}	Address hold from write end	0	–	0	–	ns
t_{SA}	Address setup to write start	0	–	0	–	ns
t_{PWE}	$\overline{WE}$ pulse width	40	–	45	–	ns
t_{BW}	$\overline{BLE}/\overline{BHE}$ LOW to write end	40	–	60	–	ns
t_{SD}	Data setup to write end	25	–	30	–	ns
t_{HD}	Data hold from write end	0	–	0	–	ns
t_{HZWE}	$\overline{WE}$ LOW to high-Z [14, 15]	–	20	–	25	ns
t_{LZWE}	$\overline{WE}$ HIGH to low-Z [14]	10	–	10	–	ns

Notes

13. Test conditions for all parameters other than Tri-state parameters assume signal transition time of 1 ns/V, timing reference levels of $V_{CC(typ)}/2$, input pulse levels of 0 to $V_{CC(typ.)}$, and output loading of the specified I_{OL}/I_{OH} as shown in the “AC Test Loads and Waveforms” section.
14. At any temperature and voltage condition, t_{HZCE} is less than t_{LZCE}, t_{HZBE} is less than t_{LZBE}, t_{HZOE} is less than t_{LZOE}, and t_{HZWE} is less than t_{LZWE} for any device.
15. t_{HZOE}, t_{HZCE}, t_{HZBE}, and t_{HZWE} transitions are measured when the outputs enter a high impedance state.
16. The internal Write time of the memory is defined by the overlap of $\overline{WE}$, $\overline{CE}_1 = V_{IL}$, $\overline{BHE}$ and/or $\overline{BLE} = V_{IL}$, and $CE_2 = V_{IH}$. All signals must be ACTIVE to initiate a write and any of these signals can terminate a write by going INACTIVE. The data input setup and hold timing should be referenced to the edge of the signal that terminates the Write.

Switching Waveforms

Figure 5. Read Cycle 1 (Address Transition Controlled) [17, 18]

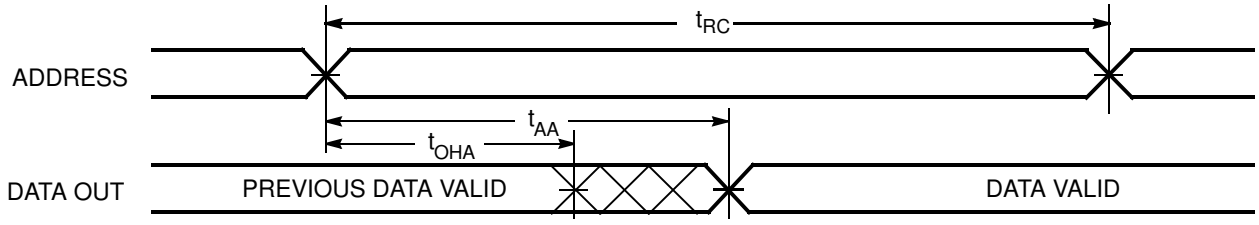

Figure 6. Read Cycle 2 ($\overline{OE}$ Controlled) [18, 19]

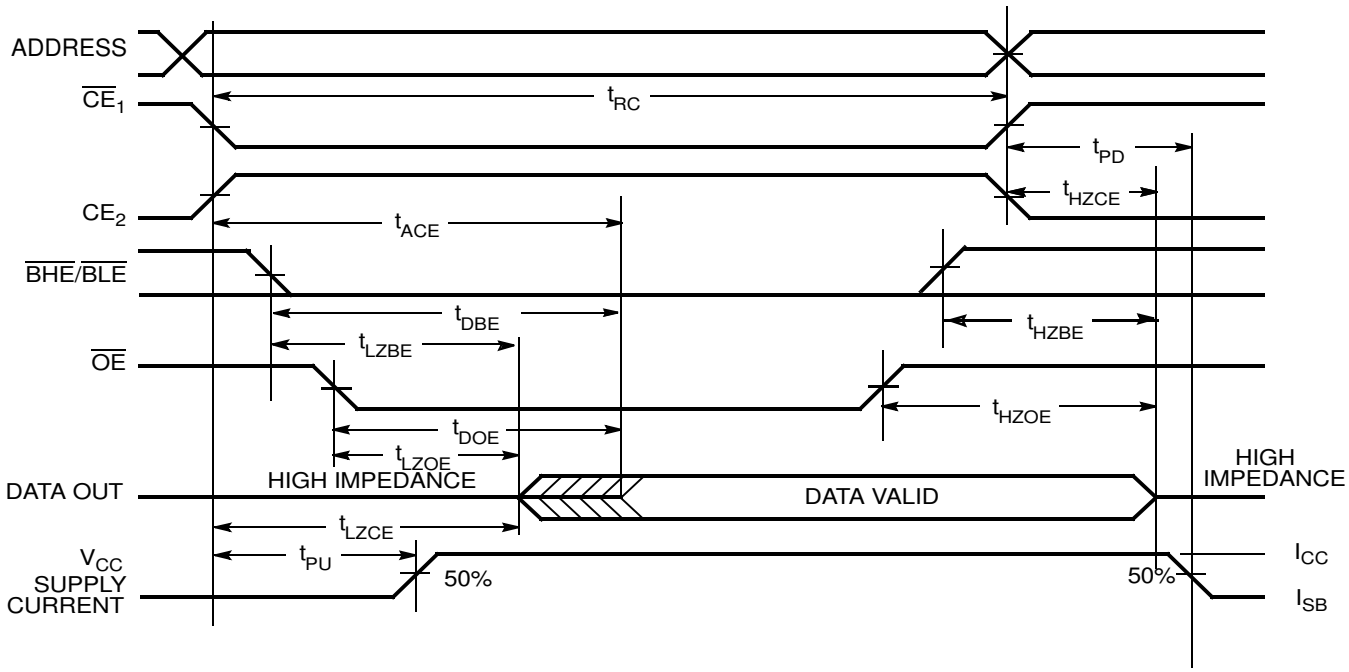

Notes
17. The device is continuously selected. $\overline{OE}$, $\overline{CE_1} = V_{IL}$, $\overline{BHE}$ and/or $\overline{BLE} = V_{IL}$, and $CE_2 = V_{IH}$.
18. $\overline{WE}$ is HIGH for read cycle.
19. Address valid prior to or coincident with $\overline{CE_1}$, $\overline{BHE}$, $\overline{BLE}$ transition LOW and CE_2 transition HIGH.

Switching Waveforms (continued)

Figure 7. Write Cycle 1 ($\overline{WE}$ Controlled) [20, 21, 22]

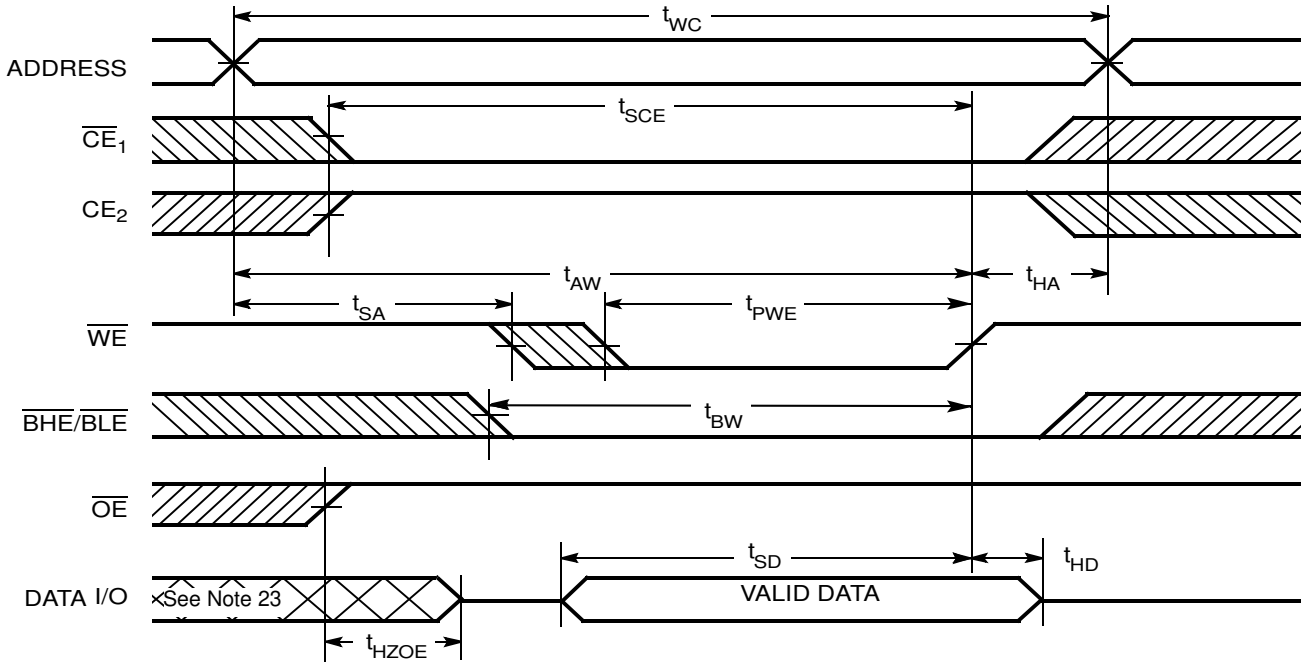

Notes

20. The internal Write time of the memory is defined by the overlap of $\overline{WE}$, $\overline{CE_1}$ = V_{IL}, $\overline{BHE}$ and/or $\overline{BLE}$ = V_{IL}, and CE_2 = V_{IH}. All signals must be ACTIVE to initiate a write and any of these signals can terminate a write by going INACTIVE. The data input setup and hold timing should be referenced to the edge of the signal that terminates the Write.
21. Data I/O is high-impedance if $\overline{OE}$ = V_{IH}.
22. If $\overline{CE_1}$ goes HIGH and CE_2 goes LOW simultaneously with $\overline{WE}$ = V_{IH}, the output remains in a high-impedance state.
23. During this period, the I/Os are in output state and input signals should not be applied.

Switching Waveforms (continued)

Figure 8. Write Cycle 2 ($\overline{CE}_1$ or CE_2 Controlled) [24, 25, 26]

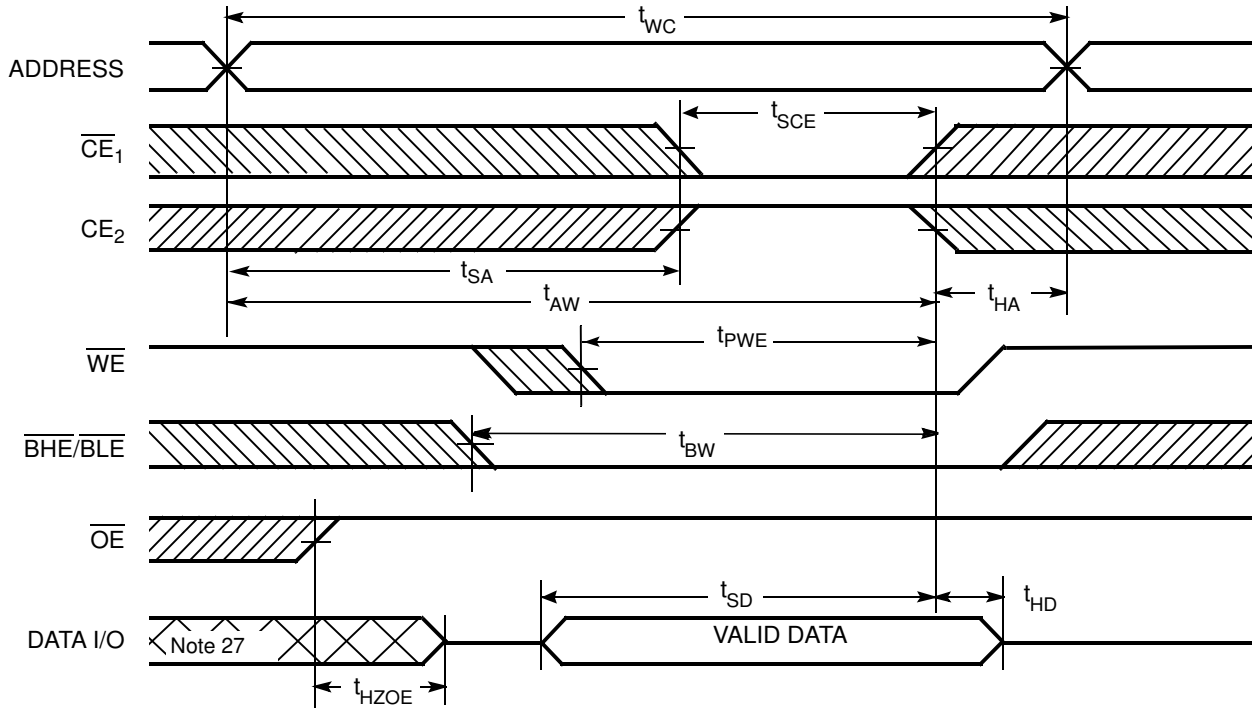

Figure 9. Write Cycle 3 ($\overline{WE}$ Controlled, $\overline{OE}$ LOW) [26]

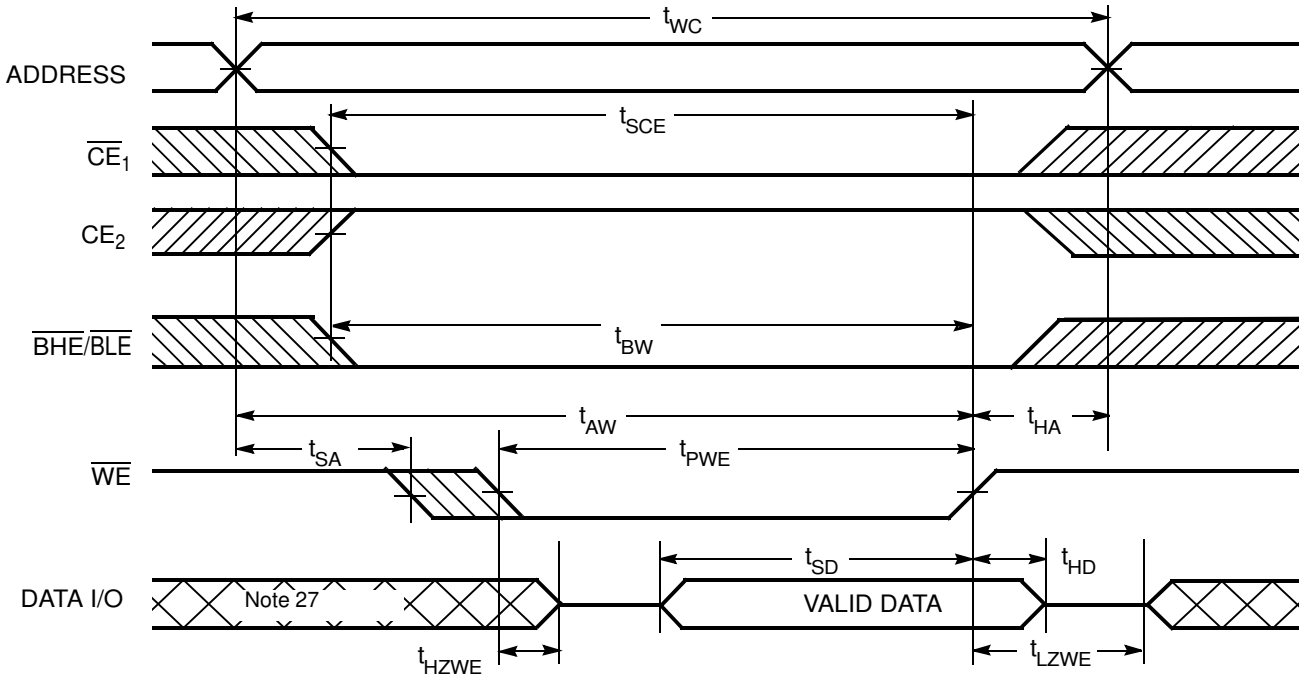

Notes

24. The internal Write time of the memory is defined by the overlap of $\overline{WE}$, $\overline{CE}_1 = V_{IL}$, $\overline{BHE}$ and/or $\overline{BLE} = V_{IL}$, and $CE_2 = V_{IH}$. All signals must be ACTIVE to initiate a write and any of these signals can terminate a write by going INACTIVE. The data input setup and hold timing should be referenced to the edge of the signal that terminates the Write.
25. Data I/O is high-impedance if $\overline{OE} = V_{IH}$.
26. If $\overline{CE}_1$ goes HIGH and CE_2 goes LOW simultaneously with $\overline{WE} = V_{IH}$, the output remains in a high-impedance state.
27. During this period, the I/Os are in output state and input signals should not be applied.

Switching Waveforms (continued)

Figure 10. Write Cycle 4 ($\overline{BHE}$/$\overline{BLE}$ Controlled, $\overline{OE}$ LOW) [28]

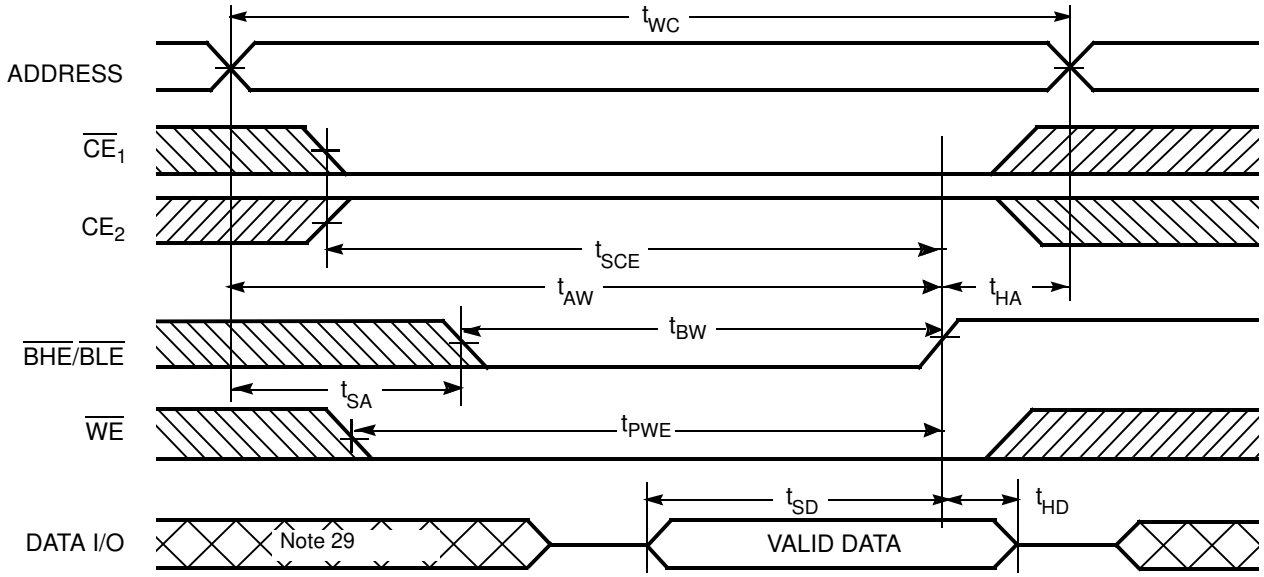

Notes
28. If $\overline{CE}_1$ goes HIGH and CE_2 goes LOW simultaneously with $\overline{WE}$ = V_{IH}, the output remains in a high-impedance state.
29. During this period, the I/Os are in output state and input signals should not be applied.

Truth Table

$\overline{CE_1}$	CE_2	$\overline{WE}$	$\overline{OE}$	$\overline{BHE}$	$\overline{BLE}$	Inputs/Outputs	Mode	Power
H	X	X	X	X	X	High Z	Deselect/Power-down	Standby (I_{SB})
X	L	X	X	X	X	High Z	Deselect/Power-down	Standby (I_{SB})
X	X	X	X	H	H	High Z	Deselect/Power-down	Standby (I_{SB})
L	H	H	L	L	L	Data out (I/O_0–I/O_{15})	Read	Active (I_{CC})
L	H	H	L	H	L	High Z (I/O_8–I/O_{15}); Data out (I/O_0–I/O_7)	Read	Active (I_{CC})
L	H	H	L	L	H	Data out (I/O_8–I/O_{15}); High Z (I/O_0–I/O_7)	Read	Active (I_{CC})
L	H	L	X	L	L	Data in (I/O_0–I/O_{15})	Write	Active (I_{CC})
L	H	L	X	H	L	High Z (I/O_8–I/O_{15}); Data in (I/O_0–I/O_7)	Write	Active (I_{CC})
L	H	L	X	L	H	Data in (I/O_8–I/O_{15}); High Z (I/O_0–I/O_7)	Write	Active (I_{CC})
L	H	H	H	L	H	High Z	Output disabled	Active (I_{CC})
L	H	H	H	H	L	High Z	Output disabled	Active (I_{CC})
L	H	H	H	L	L	High Z	Output disabled	Active (I_{CC})

Ordering Information

Speed (ns)	Ordering Code	Package Diagram	Package Type	Operating Range
55	CY62167DV30LL-55BVI	51-85178	48-ball FBGA (8 × 9.5 × 1 mm)	Industrial
	CY62167DV30LL-55BVXI		48-ball FBGA (8 × 9.5 × 1 mm) Pb-free	
	CY62167DV30LL-55ZXI	51-85183	48-pin TSOP I (12 × 18.4 × 1 mm) Pb-free	
70	CY62167DV30LL-70BVI	51-85178	48-ball FBGA (8 × 9.5 × 1 mm)	

Please contact your local Cypress sales representative for availability of these parts

Ordering Code Definitions

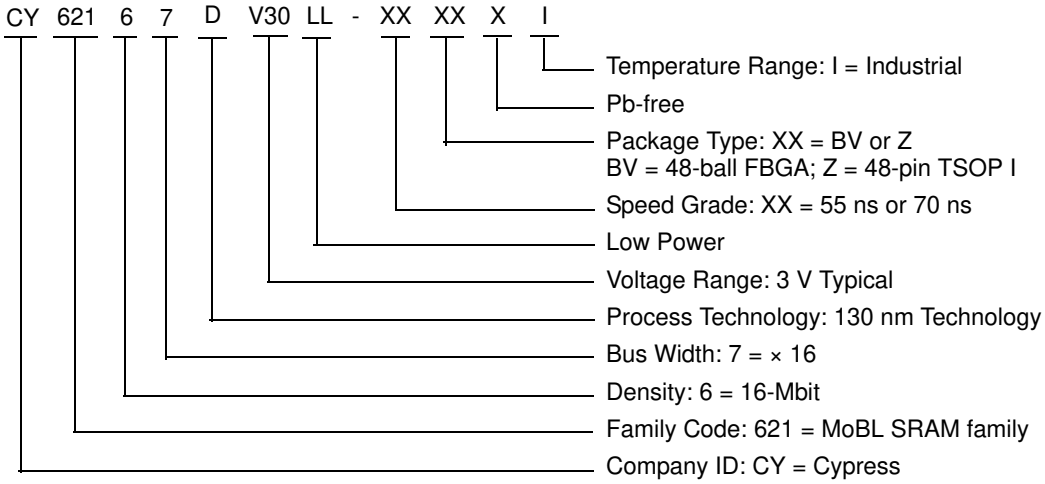

Package Diagrams

Figure 11. 48-ball VFBGA (8 × 9.5 × 1 mm) BV48B Package Outline, 51-85178

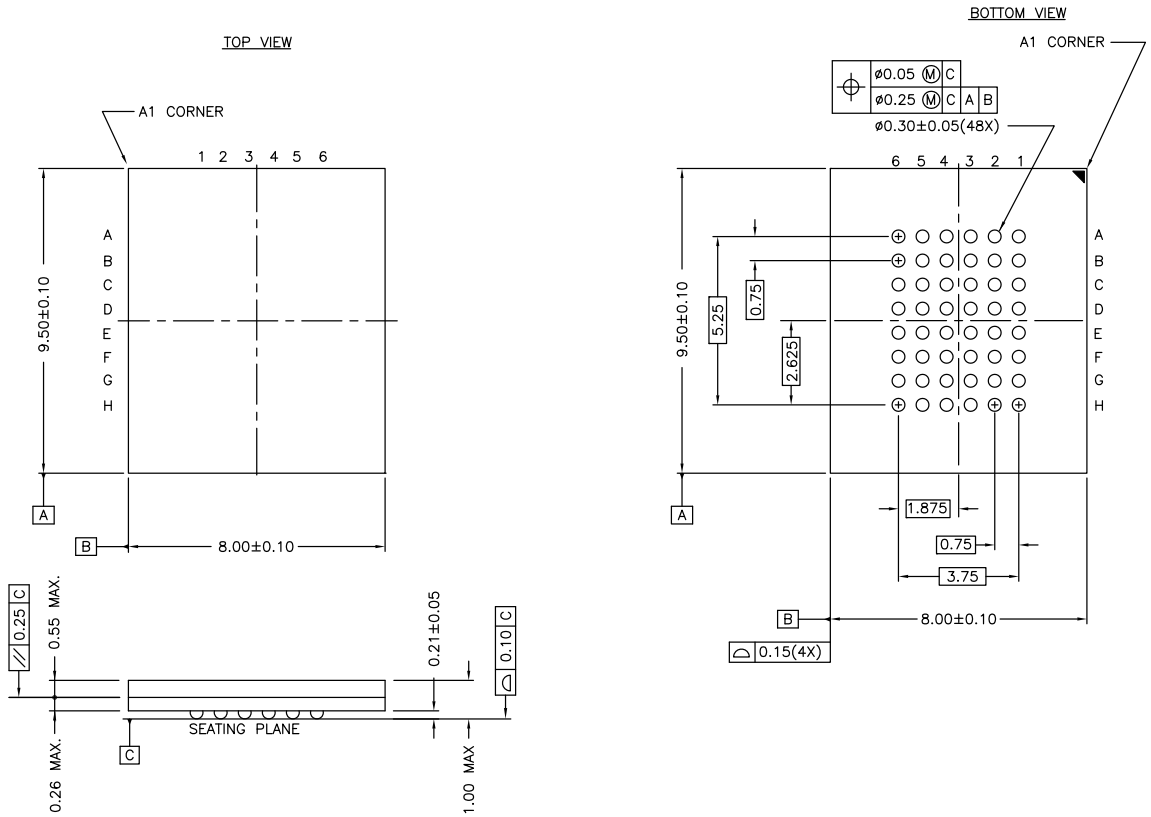

Package Diagrams (continued)

Figure 12. 48-pin TSOP I (12 × 18.4 × 1 mm) Z48A Package Outline, 51-85183

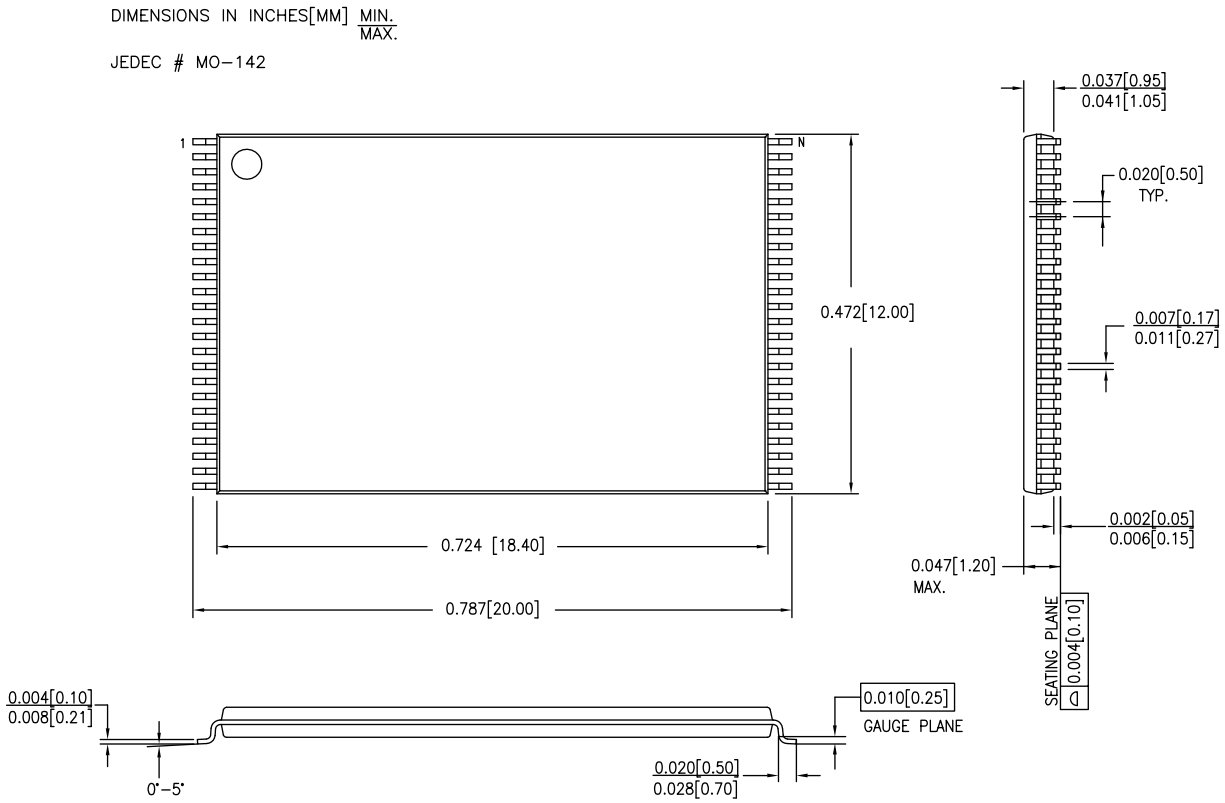

Acronyms

Acronym	Description
CMOS	Complementary Metal Oxide Semiconductor
I/O	Input/Output
SRAM	Static Random Access Memory
TSOP	Thin Small Outline Package
VFBGA	Very Fine-Pitch Ball Grid Array

Document Conventions

Units of Measure

Symbol	Unit of Measure
°C	degrees Celsius
MHz	megahertz
µA	microampere
mA	milliampere
ns	nanosecond
Ω	ohm
pF	picofarad
V	volt
W	watt

Document History Page

Document Title: CY62167DV30 MoBL®, 16-Mbit (1 M × 16) Static RAM Document Number: 38-05328				
Revision	**ECN**	**Orig. of Change**	**Submission Date**	**Description of Change**
**	118408	GUG	09/30/02	New data sheet.
*A	123692	DPM	02/11/03	Changed status from Advanced to Preliminary. Added package diagram
*B	126555	DPM	04/25/03	Minor change: Changed Sunset Owner from DPM to HRT
*C	127841	XRJ	09/10/03	Added 48 TSOP I package
*D	205701	AJU	See ECN	Changed $\overline{\text{BYTE}}$ pin usage description for 48 TSOPI package
*E	238050	KKV/AJU	See ECN	Replaced 48-ball VFBGA package diagram; Modified Package Name in Ordering Information table from BV48A to BV48B
*F	304054	PCI	See ECN	Added 45-ns Speed Bin in AC, DC and Ordering Information tables Added Footnote #12 on page #4 Added Pb-free packages on page # 10
*G	492895	VKN	See ECN	Modified datasheet to explain x8 configurability. Removed L power bin from the product offering Updated Ordering Information Table
*H	2896036	AJU	03/19/10	Removed 45-ns. Removed inactive parts from Ordering Information. Updated Packaging Information Updated links in Sales, Solutions, and Legal Information.
*I	3067267	RAME	11/08/10	Updated datasheet as per new template Added Ordering Code Definitions. Added Acronyms and Units of Measure. Updated all table notes to footnote. Package diagram updated 51-85178 from ** to *A
*J	3329789	RAME	07/27/11	Removed references to AN1064 SRAM system guidelines. Updated template according to current CY standards.
*K	4108382	AJU	08/29/2013	Updated Pin Configurations: Removed the note “Ball H6 for the FBGA package can be used to upgrade to a 32M density” and its reference in Figure 1. Updated Package Diagrams: spec 51-85178 – Changed revision from *A to *C. Updated in new template.
*L	4192919	VINI	11/15/2013	No technical updates. Completing Sunset Review.
*M	4574377	VINI	11/19/2014	Added related documentation hyperlink in page 1.

Sales, Solutions, and Legal Information

Worldwide Sales and Design Support

Cypress maintains a worldwide network of offices, solution centers, manufacturer's representatives, and distributors. To find the office closest to you, visit us at Cypress Locations.

Products

Automotive	cypress.com/go/automotive
Clocks & Buffers	cypress.com/go/clocks
Interface	cypress.com/go/interface
Lighting & Power Control	cypress.com/go/powerpsoc cypress.com/go/plc
Memory	cypress.com/go/memory
PSoC	cypress.com/go/psoc
Touch Sensing	cypress.com/go/touch
USB Controllers	cypress.com/go/USB
Wireless/RF	cypress.com/go/wireless

PSoC® Solutions

psoc.cypress.com/solutions

PSoC 1 | PSoC 3 | PSoC 4 | PSoC 5LP

Cypress Developer Community

Community | Forums | Blogs | Video | Training

Technical Support

cypress.com/go/support

© Cypress Semiconductor Corporation, 2002-2014. The information contained herein is subject to change without notice. Cypress Semiconductor Corporation assumes no responsibility for the use of any circuitry other than circuitry embodied in a Cypress product. Nor does it convey or imply any license under patent or other rights. Cypress products are not warranted nor intended to be used for medical, life support, life saving, critical control or safety applications, unless pursuant to an express written agreement with Cypress. Furthermore, Cypress does not authorize its products for use as critical components in life-support systems where a malfunction or failure may reasonably be expected to result in significant injury to the user. The inclusion of Cypress products in life-support systems application implies that the manufacturer assumes all risk of such use and in doing so indemnifies Cypress against all charges.

Any Source Code (software and/or firmware) is owned by Cypress Semiconductor Corporation (Cypress) and is protected by and subject to worldwide patent protection (United States and foreign), United States copyright laws and international treaty provisions. Cypress hereby grants to licensee a personal, non-exclusive, non-transferable license to copy, use, modify, create derivative works of, and compile the Cypress Source Code and derivative works for the sole purpose of creating custom software and or firmware in support of licensee product to be used only in conjunction with a Cypress integrated circuit as specified in the applicable agreement. Any reproduction, modification, translation, compilation, or representation of this Source Code except as specified above is prohibited without the express written permission of Cypress.

Disclaimer: CYPRESS MAKES NO WARRANTY OF ANY KIND, EXPRESS OR IMPLIED, WITH REGARD TO THIS MATERIAL, INCLUDING, BUT NOT LIMITED TO, THE IMPLIED WARRANTIES OF MERCHANTABILITY AND FITNESS FOR A PARTICULAR PURPOSE. Cypress reserves the right to make changes without further notice to the materials described herein. Cypress does not assume any liability arising out of the application or use of any product or circuit described herein. Cypress does not authorize its products for use as critical components in life-support systems where a malfunction or failure may reasonably be expected to result in significant injury to the user. The inclusion of Cypress' product in a life-support systems application implies that the manufacturer assumes all risk of such use and in doing so indemnifies Cypress against all charges.

Use may be limited by and subject to the applicable Cypress software license agreement.

MoBL is a registered trademark and More Battery Life is a trademark of Cypress Semiconductor Corporation. All product and company names mentioned in this document may be the trademarks of their respective holders.