Issue: 2 Issue Date: 10/22/2016 Effective Date: 8/20/2016

Dimensions

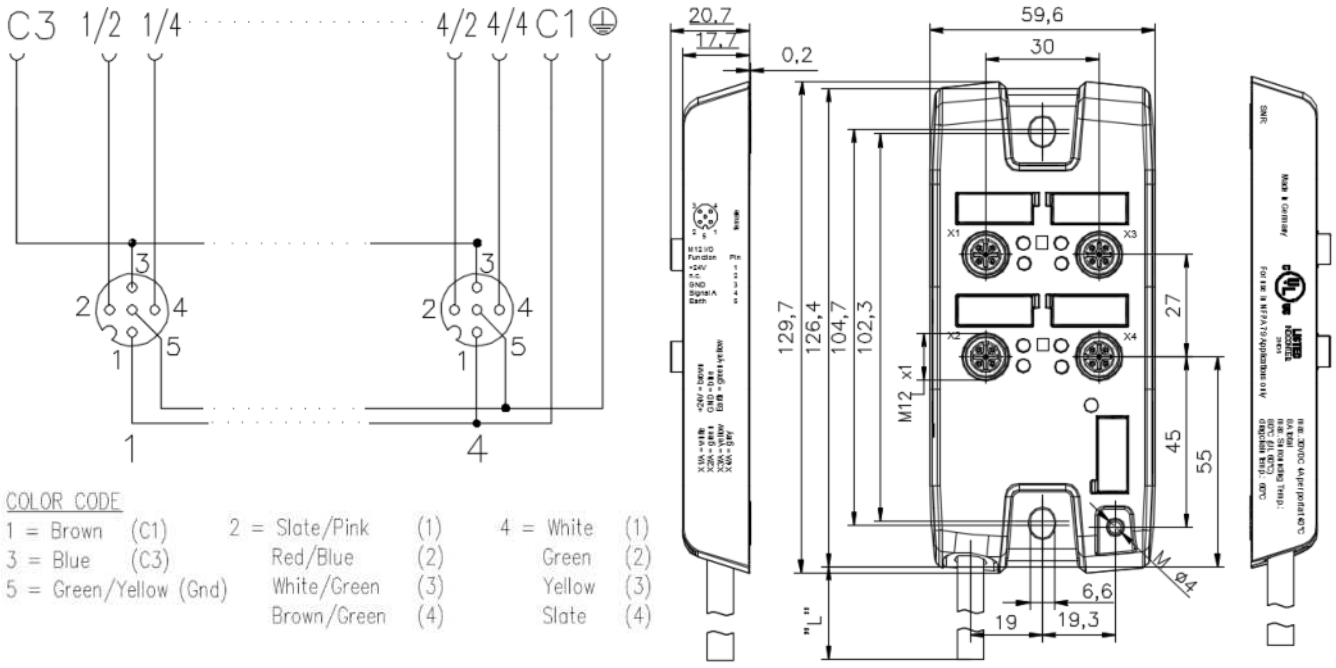

Technical Data

Box Configuration	
Ports	4
Channels per Port	2
LED	No
Code Type	A
Housing	Die Cast Zinc
Contact	Copper Alloy, Gold Plated
Receptacle Shell	Copper Alloy, Nickel Plated
O-Ring	FKM
Electrical	
Contact Resistance	≤5mΩ
Voltage Rating	30V DC
Current Rating	4A per port/8A max. Total @ 40°C
Insulation Resistance	$>10^9\Omega$
UL File	E485582
Cable Construction	
Conductor Size	3 x 1.75mm^2 & 8 x 0.50mm^2
Outer Jacket Material	Zero Halogen PUR
Outer Diameter	.366”
Color	Black
Suitable for C-Track	Yes
Environmental	

Degree of Protection	IP 65/ IP 67
Operating Temperature Range	-40C (-40F)/ +80C (+176F) (C-Track and UL Max. 60C (+140F)
RoHS	All materials used in the manufacture of this part meet the requirements of European Directive 2011/65/EU regarding the restriction of use of certain hazardous substances in electrical and electronic equipment. Exemption used; 6a.
REACH Regulation (EC 1907/2006)	This product does not contain Substances of Very High Concern (SVHC) listed on the European Union's REACH candidate list in excess of 0.1% mass of the item.
Accessories Included	
2 Dust Covers for unused sockets	
5 attachable labels	

Ordering Information	**Description**	**Quantity**
907-5M NC032	5 Meters	Each
907-10M NC032	10 Meters	Each
907-CN NC032	Connectorized	Each

Issue: 1 Issue Date: 8/20/2016 Effective Date: 8/20/2016

Although Alpha Wire ("Alpha") makes every reasonable effort to ensure their accuracy at the time of this publication, information and specifications described herein are subject to error or omission and to change without notice, and the listing of such information and specifications does not ensure product availability. Alpha provides the information and specification herein on an "AS IS" basis, with no representations or warranties, whether express, statutory or implied. In no event will Alpha be liable any damages (including consequential, indirect, incidental, special, punitive, or exemplary damages) whatsoever, even if Alpha has been advised of the possibility of such damages, whether in an action under contact, negligence or any other theory, arising out of or in connection with the use, or inability to use, the information or specification described herein.