HIP2101

100V/2A Peak, Low Cost, High Frequency Half Bridge Driver

FN9025
Rev.10.00
Aug 8, 2019

The HIP2101 is a high frequency, 100V Half Bridge N-Channel power MOSFET driver IC. It is equivalent to the HIP2100 with the added advantage of full TTL/CMOS compatible logic input pins. The low-side and high-side gate drivers are independently controlled and matched to 13ns. This gives users total control over dead time for specific power circuit topologies. Undervoltage protection on both the low-side and high-side supplies force the outputs low. An on-chip diode eliminates the discrete diode required with other driver ICs. A new level-shifter topology yields the low-power benefits of pulsed operation with the safety of DC operation. Unlike some competitors, the high-side output returns to its correct state after a momentary undervoltage of the high-side supply.

Applications

- Telecom Half Bridge Power Supplies
- Avionics DC-DC Converters
- Two-Switch Forward Converters

Active Clamp Forward Converters

Related Literature

For a full list of related documents, visit our website:

- HIP2101 device page

Features

- Drives N-Channel MOSFET Half Bridge
- SOIC, EPSOIC, QFN and DFN Package Options
- SOIC, EPSOIC and DFN Packages Compliant with 100V Conductor Spacing Guidelines of IPC-2221
- Pb-free Product Available (RoHS Compliant)
- Bootstrap Supply Max Voltage to 114VDC
- On-Chip 1Ω Bootstrap Diode
- Fast Propagation Times for Multi-MHz Circuits
- Drives 1000pF Load with Rise and Fall Times Typ. 10ns
- TTL/CMOS Input Thresholds Increase Flexibility
- Independent Inputs for Non-Half Bridge Topologies
- No Start-Up Problems
- Outputs Unaffected by Supply Glitches, HS Ringing Below Ground, or HS Slewing at High dv/dt
- Low Power Consumption
- Wide Supply Range
- Supply Undervoltage Protection
- 3Ω Output Driver Resistance
- QFN/DFN Package:
  - Compliant to JEDEC PUB95 MO-220 QFN - Quad Flat No Leads - Package Outline
  - Near Chip Scale Package footprint, which improves PCB efficiency and has a thinner profile

Ordering Information

PART NUMBER (Notes 2, 3)	TEMP. RANGE (°C)	TAPE AND REEL (Units) (Note 1)	PACKAGE (RoHS Compliant)	PKG. DWG. #
HIP2101IBZ	-40 to 125	-	8 Ld SOIC	M8.15
HIP2101IBZT	-40 to 125	2.5k	8 Ld SOIC	M8.15
HIP2101IBZT7A	-40 to 125	250	8 Ld SOIC	M8.15
HIP2101EIBZ	-40 to 125	-	8 Ld EPSOIC	M8.15C
HIP2101EIBZT	-40 to 125	2.5k	8 Ld EPSOIC	M8.15C
HIP2101IRZ	-40 to 125	-	16 Ld 5x5 QFN	L16.5x5
HIP2101IRZT	-40 to 125	6k	16 Ld 5x5 QFN	L16.5x5
HIP2101IR4Z	-40 to 125	-	12 Ld 4x4 DFN	L12.4x4A
HIP2101IR4ZT	-40 to 125	6k	12 Ld 4x4 DFN	L12.4x4A

NOTES:

1. See TB347 for details about reel specifications.
2. Pb-free products employ special Pb-free material sets; molding compounds/die attach materials and 100% matte tin plate termination finish, which are RoHS compliant and compatible with both SnPb and Pb-free soldering operations. Pb-free products are MSL classified at Pb-free peak reflow temperatures that meet or exceed the Pb-free requirements of IPC/JEDEC J-STD-020C.
3. For Moisture Sensitivity Level (MSL), see the HIP2101 device page. For more information about MSL, see TB363.

Pinouts

HIP2101 (SOIC, EPSOIC)
TOP VIEW

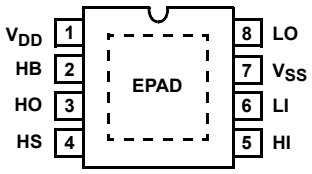

HIP2101IR4 (DFN)
TOP VIEW

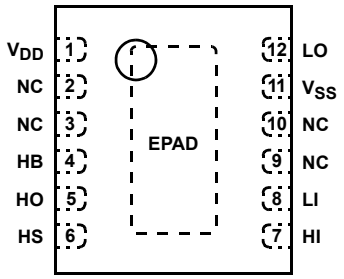

HIP2101 (QFN)
TOP VIEW

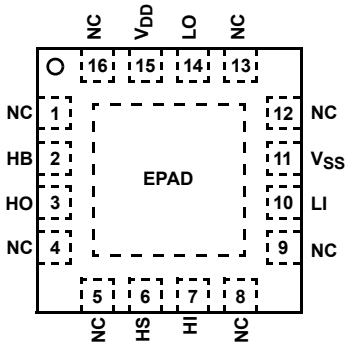

NOTE: EPAD = Exposed PAD.

Pin Descriptions

SYMBOL	DESCRIPTION
V_{DD}	Positive Supply to lower gate drivers. De-couple this pin to V_{SS}. Bootstrap diode connected to HB.
HB	High-Side Bootstrap supply. External bootstrap capacitor is required. Connect positive side of bootstrap capacitor to this pin. Bootstrap diode is on-chip.
HO	High-Side Output. Connect to gate of High-Side power MOSFET.
HS	High-Side Source connection. Connect to source of High-Side power MOSFET. Connect negative side of bootstrap capacitor to this pin.
HI	High-Side input.
LI	Low-Side input.
V_{SS}	Chip negative supply, generally will be ground.
LO	Low-Side Output. Connect to gate of Low-Side power MOSFET.
EPAD	Exposed pad. Connect to ground or float. The EPAD is electrically isolated from all other pins.

Application Block Diagram

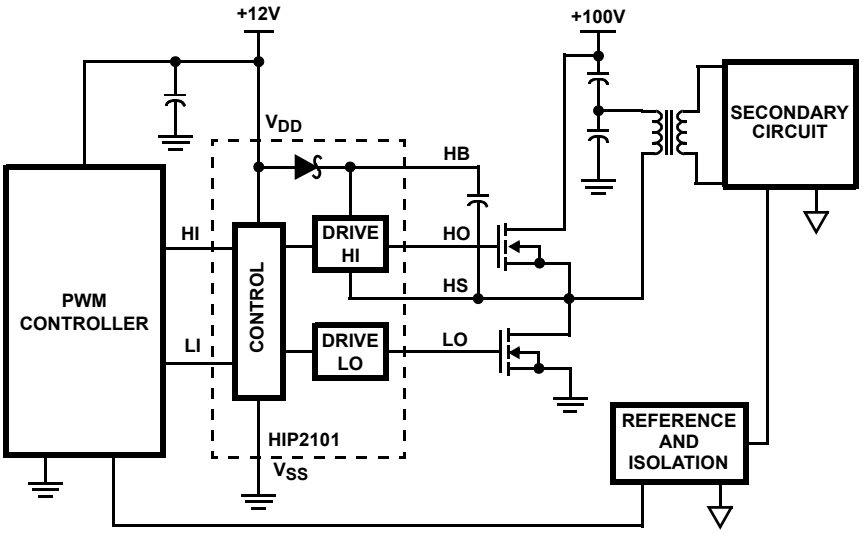

Functional Block Diagram

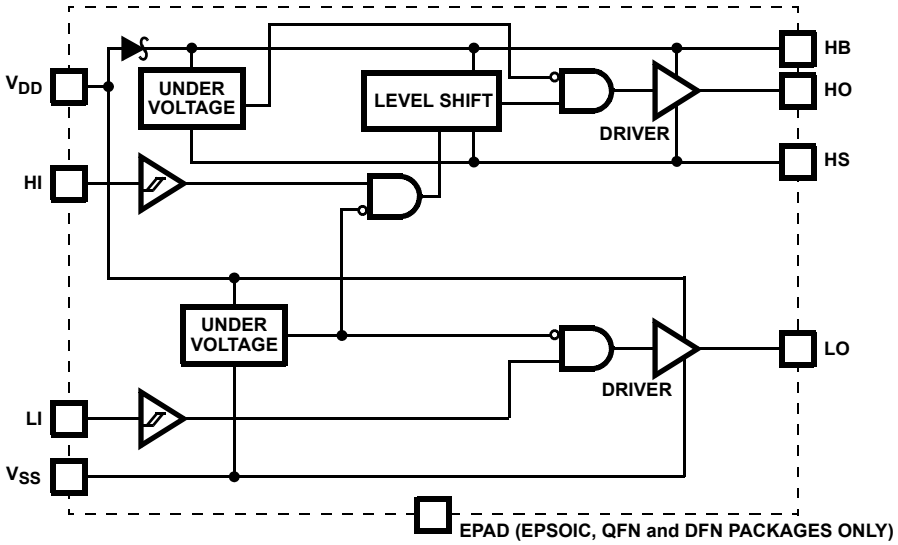

*EPAD = Exposed Pad. The EPAD is electrically isolated from all other pins. For best thermal performance connect the EPAD to the PCB power ground plane.

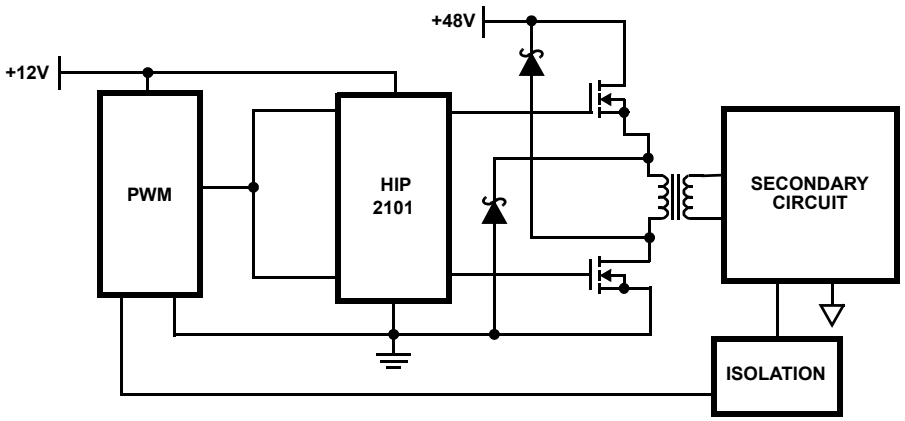

FIGURE 1. TWO-SWITCH FORWARD CONVERTER

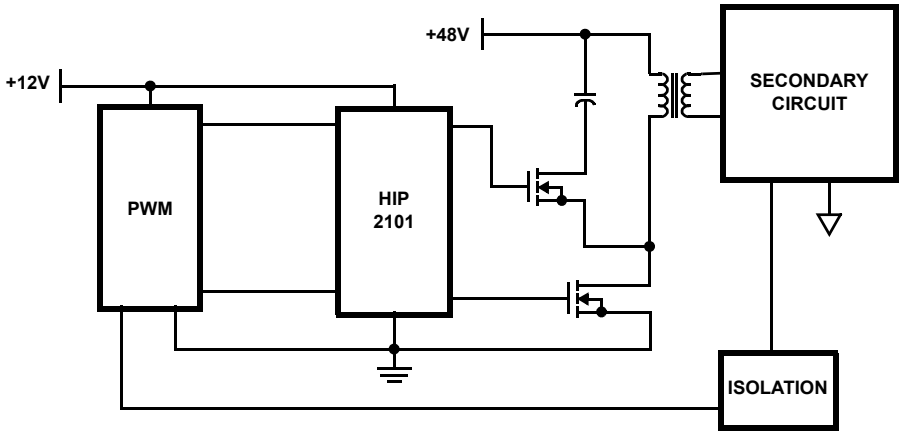

FIGURE 2. FORWARD CONVERTER WITH AN ACTIVE CLAMP

Absolute Maximum Ratings

Supply Voltage, V_{DD}, V_{HB}-V_{HS} (Notes 4, 5) . . . . . -0.3V to 18V
LI and HI Voltages (Note 5) . . . . . -0.3V to 7.0V
Voltage on LO (Note 5) . . . . . -0.3V to V_{DD} +0.3V
Voltage on HO (Note 5) . . . . . V_{HS} -0.3V to V_{HB} +0.3V
Voltage on HS (Continuous) (Note 5) . . . . . -1V to 110V
Voltage on HB (Note 5) . . . . . +118V
Average Current in V_{DD} to HB diode 100mA
ESD Classification . . . . . Class 1 (1kV)

Maximum Recommended Operating Conditions

Supply Voltage, V_{DD} . . . . . +9V to 14.0VDC
Voltage on HS . . . . . -1V to 100V
Voltage on HS . . . . . (Repetitive Transient) -5V to 105V
Voltage on HB . . V_{HS} +8V to V_{HS} +14.0V and V_{DD} -1V to V_{DD} +100V
HS Slew Rate. . . . . <50V/ns

Thermal Information

Thermal Resistance (Typical)	θ_{JA} (°C/W)	θ_{JC} (°C/W)
SOIC (Note 6)	95	N/A
EPSOIC (Note 7)	40	3.0
QFN (Note 7)	37	6.5
DFN (Note 7)	40	3.0

Max Power Dissipation at 25°C in Free Air (SOIC, Note 6) 1.3W
Max Power Dissipation at 25°C in Free Air (EPSOIC, Note 7). . 3.1W
Max Power Dissipation at 25°C in Free Air (QFN, Note 7). 3.3W
Storage Temperature Range . . . . . -65°C to 150°C
Junction Temperature Range. . . . . -55°C to 150°C
Lead Temperature (Soldering 10s - SOIC Lead Tips Only) . . 300°C
For Recommended soldering conditions see TB389.

CAUTION: Stresses above those listed in "Absolute Maximum Ratings" can cause permanent damage to the device. This is a stress only rating and operation of the device at these or any other conditions above those indicated in the recommended operating conditions of this specification is not implied.

NOTES:

4. The HIP2101 is capable of derated operation at supply voltages exceeding 14V. Figure 16 shows the high-side voltage derating curve for this mode of operation.
5. All voltages referenced to V_{SS} unless otherwise specified.
6. θ_{JA} is measured with the component mounted on a high-effective thermal conductivity test board in free air. See TB379 for details.
7. θ_{JA} is measured in free air with the component mounted on a high-effective thermal conductivity test board with "direct attach" features. θ_{JC}, the "case temp" is measured at the center of the exposed metal pad on the package underside. See TB379.

Electrical Specifications

V_{DD} = V_{HB} = 12V, V_{SS} = V_{HS} = 0V, No Load on LO or HO, unless otherwise specified

PARAMETERS	SYMBOL	TEST CONDITIONS	T_J = 25°C			T_J = -40°C TO 125°C		UNIT
			MIN	TYP	MAX	MIN	MAX	
SUPPLY CURRENTS								
V_{DD} Quiescent Current	I_{DD}	LI = HI = 0V	-	0.3	0.45	-	0.6	mA
V_{DD} Operating Current	I_{DDO}	f = 500kHz	-	1.7	3.0	-	3.4	mA
Total HB Quiescent Current	I_{HB}	LI = HI = 0V	-	0.1	0.15	-	0.2	mA
Total HB Operating Current	I_{HBO}	f = 500kHz	-	1.5	2.5	-	3	mA
HB to V_{SS} Current, Quiescent	I_{HBS}	V_{HS} = V_{HB} = 114V	-	0.05	1.5	-	10	µA
HB to V_{SS} Current, Operating	I_{HBSO}	f = 500kHz	-	0.7	-	-	-	mA
INPUT PINS								
Low Level Input Voltage Threshold	V_{IL}		0.8	1.65	-	0.8	-	V
High Level Input Voltage Threshold	V_{IH}		-	1.65	2.2	-	2.2	V
Input Pulldown Resistance	R_I		-	200	-	100	500	kΩ
UNDER VOLTAGE PROTECTION								
V_{DD} Rising Threshold	V_{DDR}		7	7.3	7.8	6.5	8	V
V_{DD} Threshold Hysteresis	V_{DDH}		-	0.5	-	-	-	V
HB Rising Threshold	V_{HBR}		6.5	6.9	7.5	6	8	V
HB Threshold Hysteresis	V_{HBH}		-	0.4	-	-	-	V

Electrical Specifications $V_{DD} = V_{HB} = 12V$, $V_{SS} = V_{HS} = 0V$, No Load on LO or HO, unless otherwise specified **(Continued)**

PARAMETERS	SYMBOL	TEST CONDITIONS	T_J = 25°C			T_J = -40°C TO 125°C		UNIT
			MIN	TYP	MAX	MIN	MAX	
BOOT STRAP DIODE								
Low-Current Forward Voltage	V_{DL}	I_{VDD-HB} = 100µA	-	0.45	0.70	-	0.7	V
High-Current Forward Voltage	V_{DH}	I_{VDD-HB} = 100mA	-	0.7	0.92	-	1	V
Dynamic Resistance	R_D	I_{VDD-HB} = 100mA	-	0.8	1	-	1.5	Ω
LO GATE DRIVER								
Low Level Output Voltage	V_{OLL}	I_{LO} = 100mA	-	0.25	0.3	-	0.4	V
High Level Output Voltage	V_{OHL}	I_{LO} = -100mA, $V_{OHL} = V_{DD}-V_{LO}$	-	0.25	0.3	-	0.4	V
Peak Pullup Current	I_{OHL}	V_{LO} = 0V	-	2	-	-	-	A
Peak Pulldown Current	I_{OLL}	V_{LO} = 12V	-	2	-	-	-	A
HO GATE DRIVER								
Low Level Output Voltage	V_{OLH}	I_{HO} = 100mA	-	0.25	0.3	-	0.4	V
High Level Output Voltage	V_{OHH}	I_{HO} = -100mA, $V_{OHH} = V_{HB}-V_{HO}$	-	0.25	0.3	-	0.4	V
Peak Pullup Current	I_{OHH}	V_{HO} = 0V	-	2	-	-	-	A
Peak Pulldown Current	I_{OLH}	V_{HO} = 12V	-	2	-	-	-	A

Switching Specifications $V_{DD} = V_{HB} = 12V$, $V_{SS} = V_{HS} = 0V$, No Load on LO or HO, unless otherwise specified

PARAMETERS	SYMBOL	TEST CONDITIONS	T_J = 25°C			T_J = -40°C TO 125°C		UNIT
			MIN	TYP	MAX	MIN	MAX	
Lower Turn-Off Propagation Delay (LI Falling to LO Falling)	t_{LPHL}		-	25	43	-	56	ns
Upper Turn-Off Propagation Delay (HI Falling to HO Falling)	t_{HPHL}		-	25	43	-	56	ns
Lower Turn-On Propagation Delay (LI Rising to LO Rising)	t_{LPLH}		-	25	43	-	56	ns
Upper Turn-On Propagation Delay (HI Rising to HO Rising)	t_{HPLH}		-	25	43	-	56	ns
Delay Matching: Lower Turn-On and Upper Turn-Off	t_{MON}		-	2	13	-	16	ns
Delay Matching: Lower Turn-Off and Upper Turn-On	t_{MOFF}		-	2	13	-	16	ns
Either Output Rise/Fall Time	t_{RC},t_{FC}	C_L = 1000pF	-	10	-	-	-	ns
Either Output Rise/Fall Time (3V to 9V)	t_R,t_F	C_L = 0.1µF	-	0.5	0.6	-	0.8	us
Either Output Rise Time Driving DMOS	t_{RD}	C_L = IRFR120	-	20	-	-	-	ns
Either Output Fall Time Driving DMOS	t_{FD}	C_L = IRFR120	-	10	-	-	-	ns
Minimum Input Pulse Width that Changes the Output	t_{PW}		-	-	-	-	50	ns
Bootstrap Diode Turn-On or Turn-Off Time	t_{BS}		-	10	-	-	-	ns

Timing Diagrams

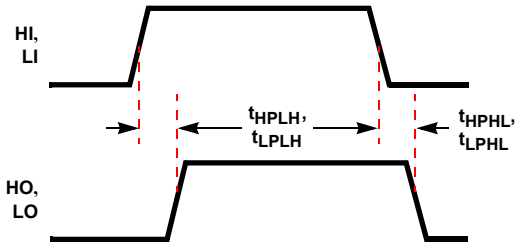

FIGURE 3.

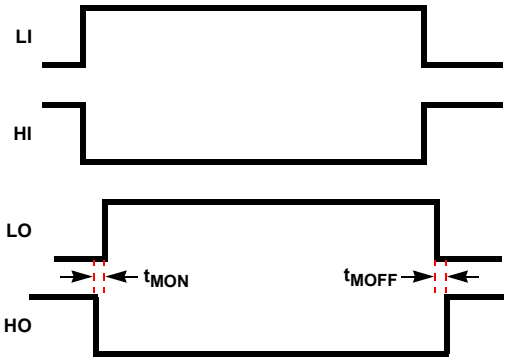

FIGURE 4.

Typical Performance Curves

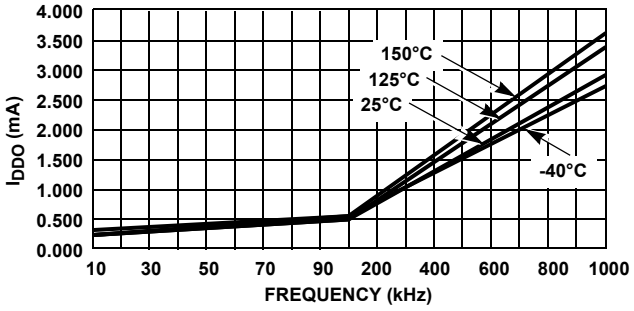

FIGURE 5A.

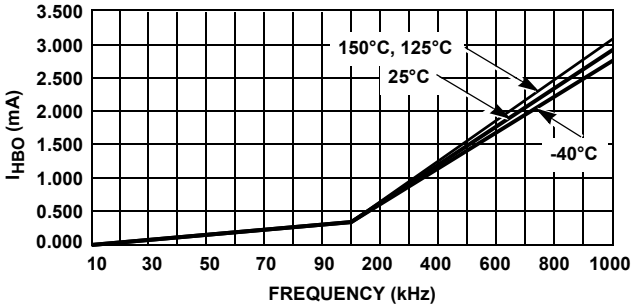

FIGURE 5B.

FIGURE 5. OPERATING CURRENT vs FREQUENCY

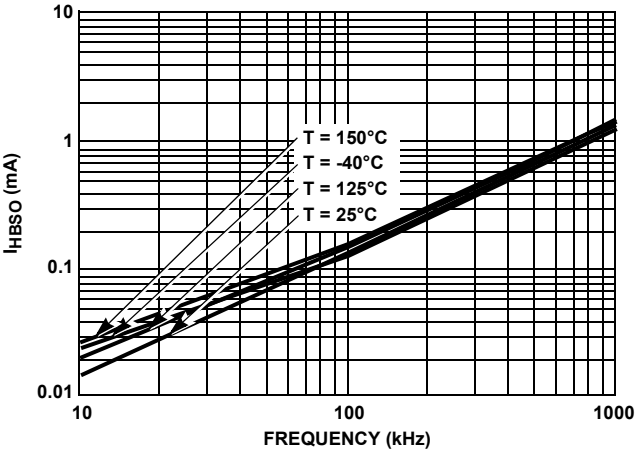

FIGURE 6. HB TO VSS OPERATING CURRENT vs FREQUENCY

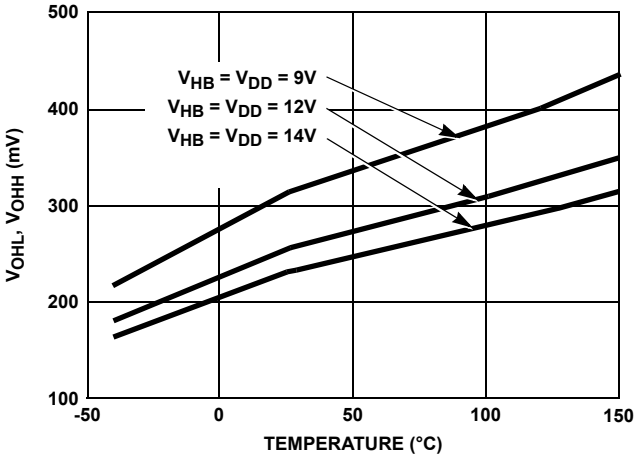

FIGURE 7. HIGH LEVEL OUTPUT VOLTAGE vs TEMPERATURE

Typical Performance Curves (Continued)

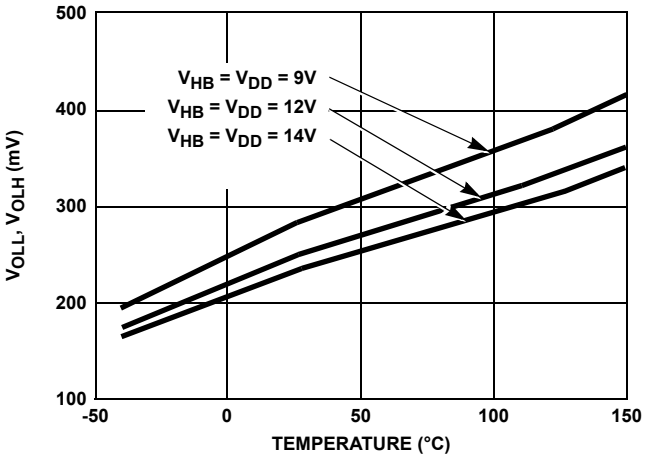

FIGURE 8. LOW LEVEL OUTPUT VOLTAGE vs TEMPERATURE

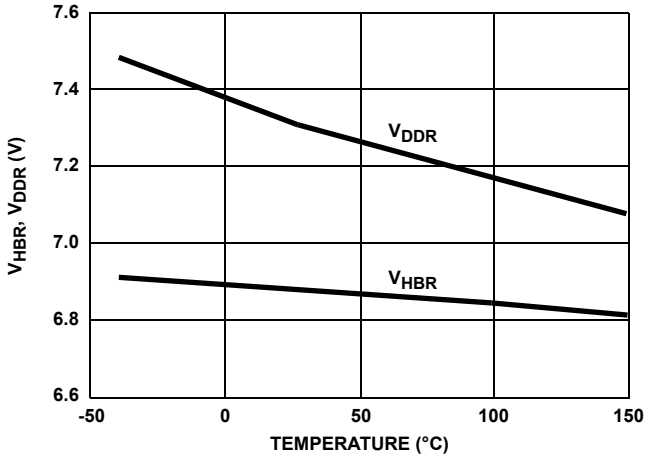

FIGURE 9. UNDERVOLTAGE LOCKOUT THRESHOLD vs TEMPERATURE

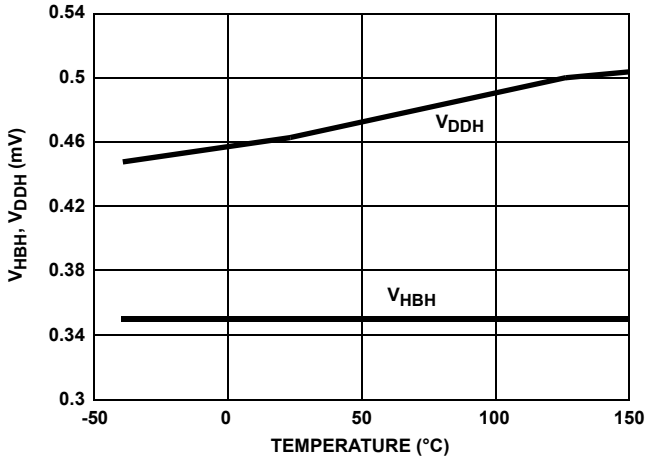

FIGURE 10. UNDERVOLTAGE LOCKOUT HYSTERESIS vs TEMPERATURE

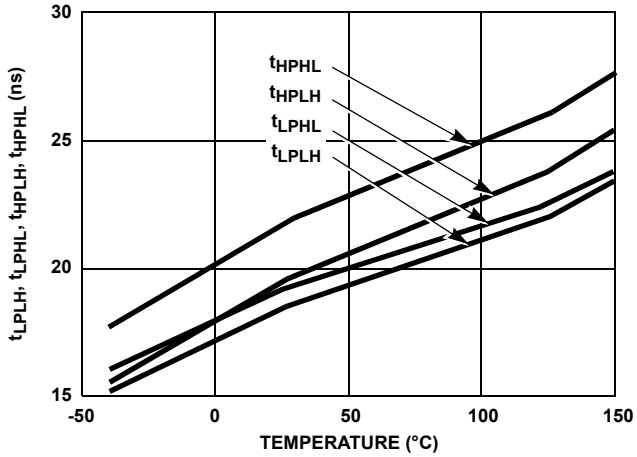

FIGURE 11. PROPAGATION DELAYS vs TEMPERATURE

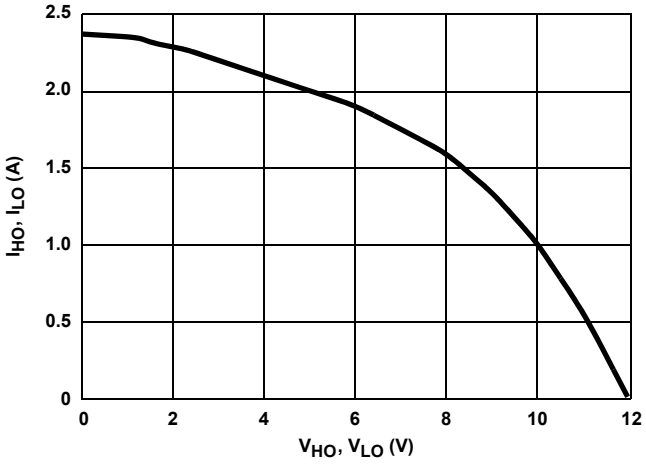

FIGURE 12. PEAK PULLUP CURRENT vs OUTPUT VOLTAGE

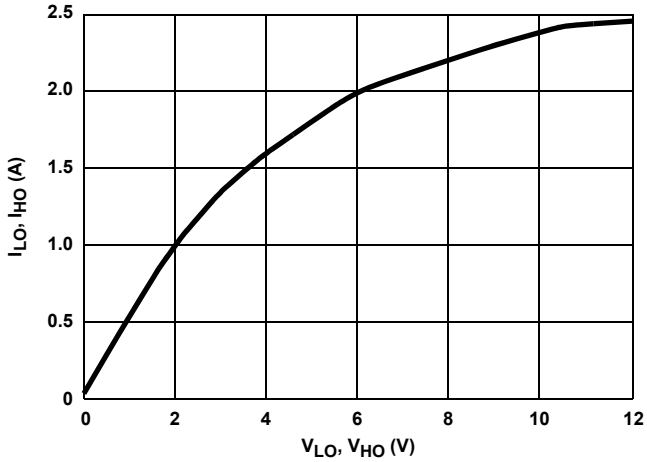

FIGURE 13. PEAK PULLDOWN CURRENT vs OUTPUT VOLTAGE

Typical Performance Curves (Continued)

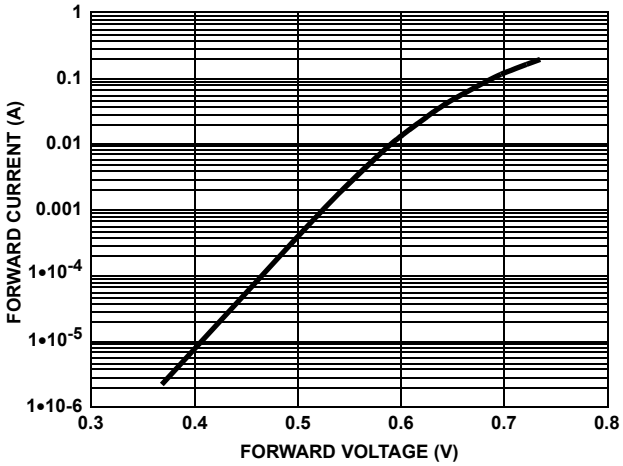

FIGURE 14. BOOTSTRAP DIODE I-V CHARACTERISTICS

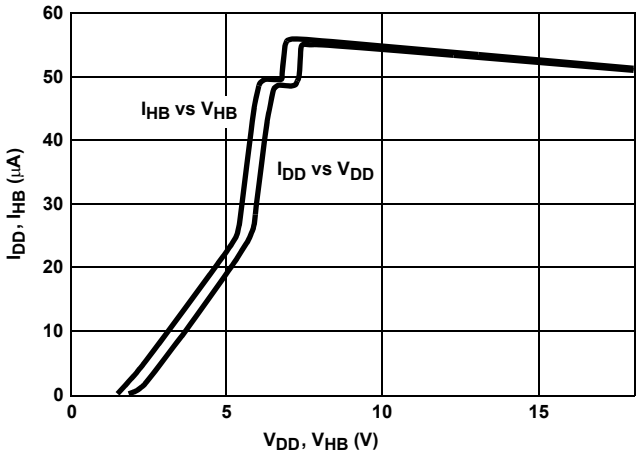

FIGURE 15. QUIESCENT CURRENT vs VOLTAGE

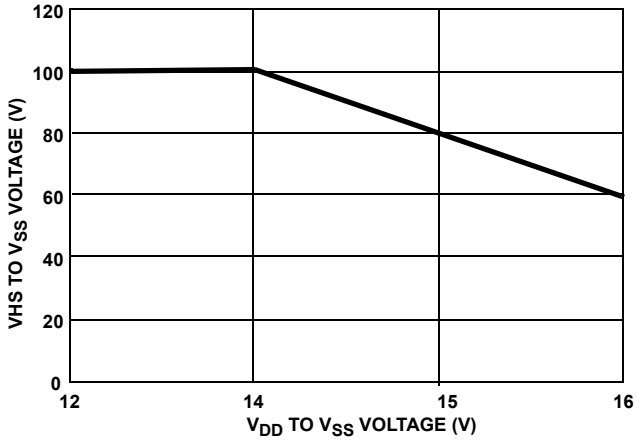

FIGURE 16. VHS VOLTAGE vs V_{DD} VOLTAGE

Revision History

The revision history provided is for informational purposes only and is believed to be accurate, but not warranted. Please go to the web to make sure that you have the latest revision.

DATE	REVISION	CHANGE
Aug 8, 2019	FN9025.10	Added Related Literature. Updated Links throughout. Updated Ordering information by removing obsolete parts, adding tape and reel part information, updating notes, and adding Note 3. Removed About Intersil section. Updated disclaimer. Updated POD M8.15C to latest revision changes are as follows: -Updated Millimeter MIN and MAX values for A from: 1.43 MIN and 1.68 MAX to: 1.422 MIN and 1.700 MAX -Updated Inch MAX for A from: 0.066 to: 0.067 -A1 Inches changed MIN from: 0.001 to 0.0, and A1 Millimeters MIN from 0.03 to 0.0 -L Millimeter Min changed from: 0.41 to 0.406
Nov 12, 2015	FN9025.9	- Updated Ordering Information Table on page 2. - Added Revision History. - Added About Intersil Verbiage. - Updated POD L12.4X4A to latest revision changes are as follow: Updated to new POD format by removing table listing dimensions and moving dimensions onto drawing. Added Typical Recommended Land Pattern. Bottom View changed "3.2 REF" TO "2.5 REF" Typical Recommended Land Pattern changed "3.80" to "3.75" From: Tiebar shown (if present) is a non-functional feature. To: Tiebar shown (if present) is a non-functional feature and may be located on any of the 4 sides (or ends). - Updated POD M8.15 to latest revision changes are as follow: Updated to new POD format by removing table and moving dimensions onto drawing and adding land pattern. Changed in Typical Recommended Land Pattern the following: 2.41(0.095) to 2.20(0.087) 0.76 (0.030) to 0.60(0.023) 0.200 to 5.20(0.205) Changed Note 1 "1982" to "1994" - Updated POD M8.15C to most current version. Removed "u" symbol from drawing (overlaps the "a" on Side View).

Package Outline Drawings

For the most recent package outline drawing, see L12.4x4A.

L12.4x4A
12 Lead Dual Flat No-Lead Plastic Package (DFN)
Rev 3, 3/15

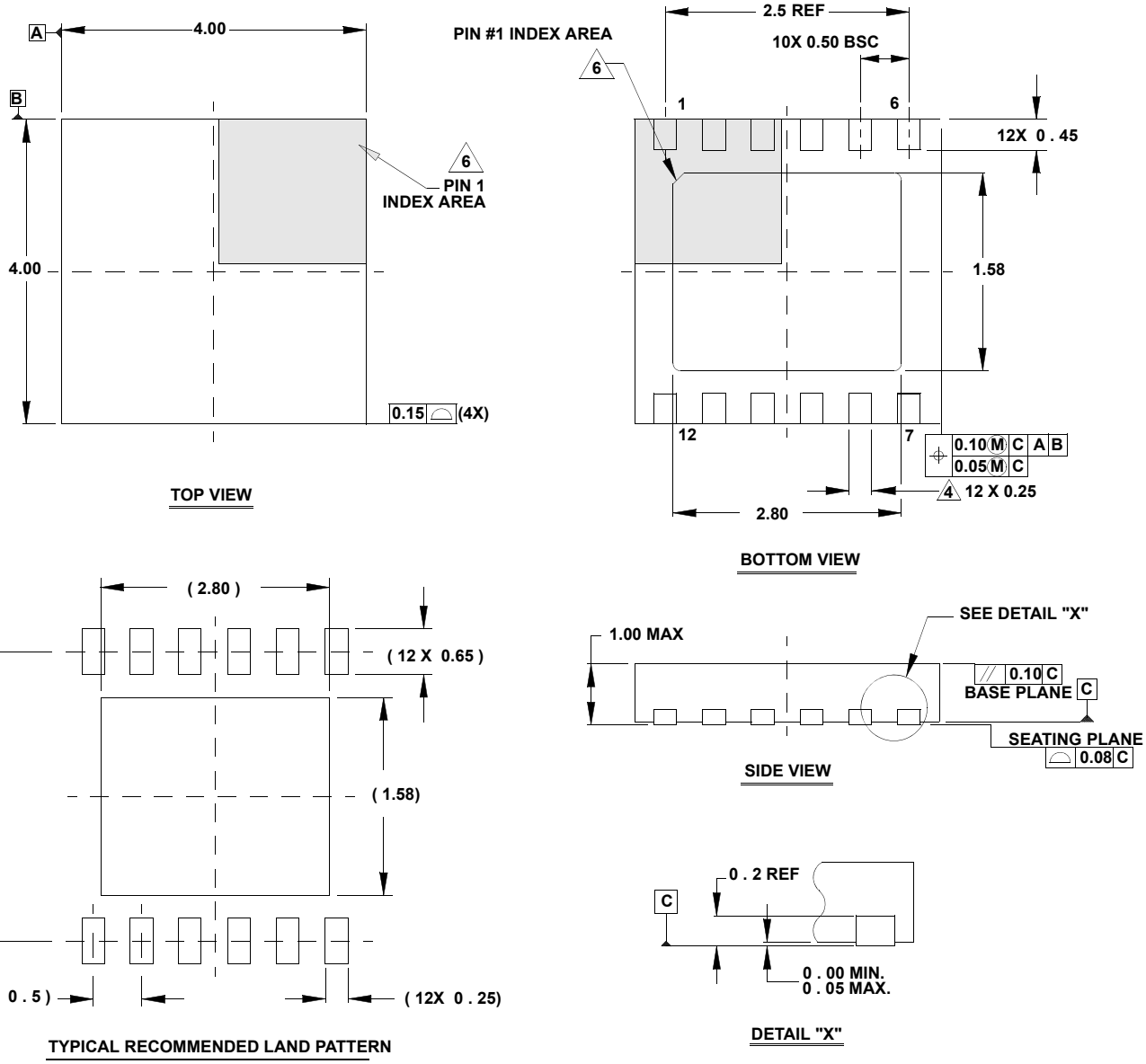

NOTES:

1. Dimensions are in millimeters.
   Dimensions in ( ) for Reference Only.
2. Dimensioning and tolerancing conform to AMSE Y14.5m-1994.
3. Unless otherwise specified, tolerance : Decimal ± 0.05
4. Lead width applies to the metallized terminal and is measured between 0.15mm and 0.30mm from the terminal tip.
5. Tiebar shown (if present) is a non-functional feature and may be located on any of the 4 sides (or ends).
6. The configuration of the pin #1 identifier is optional, but must be located within the zone indicated. The pin #1 identifier may be either a mold or mark feature.

For the most recent package outline drawing, see L16.5x5.

L16.5x5
16 Lead Quad Flat No-Lead Plastic Package (QFN)
(Compliant to JEDEC MO-220VHHB ISSUE C)

SYMBOL	MILLIMETERS			NOTES
	MIN	NOMINAL	MAX	
A	0.80	0.90	1.00	-
A1	-	-	0.05	-
A2	-	-	1.00	9
A3		0.20 REF		9
b	0.28	0.33	0.40	5, 8
D		5.00 BSC		-
D1		4.75 BSC		9
D2	2.55	2.70	2.85	7, 8
E		5.00 BSC		-
E1		4.75 BSC		9
E2	2.55	2.70	2.85	7, 8
e		0.80 BSC		-
k	0.25	-	-	-
L	0.35	0.60	0.75	8
L1	-	-	0.15	10
N		16		2
Nd		4		3
Ne	4	4		3
P	-	-	0.60	9
θ	-	-	12	9

Rev. 2 10/02

NOTES:

1. Dimensioning and tolerancing conform to ASME Y14.5-1994.
2. N is the number of terminals.
3. Nd and Ne refer to the number of terminals on each D and E.
4. All dimensions are in millimeters. Angles are in degrees.
5. Dimension b applies to the metallized terminal and is measured between 0.15mm and 0.30mm from the terminal tip.
6. The configuration of the pin #1 identifier is optional, but must be located within the zone indicated. The pin #1 identifier may be either a mold or mark feature.
7. Dimensions D2 and E2 are for the exposed pads which provide improved electrical and thermal performance.
8. Nominal dimensions are provided to assist with PCB Land Pattern Design efforts, see Intersil Technical Brief TB389.
9. Features and dimensions A2, A3, D1, E1, P & θ are present when Anvil singulation method is used and not present for saw singulation.
10. Depending on the method of lead termination at the edge of the package, a maximum 0.15mm pull back (L1) maybe present. L minus L1 to be equal to or greater than 0.3mm.

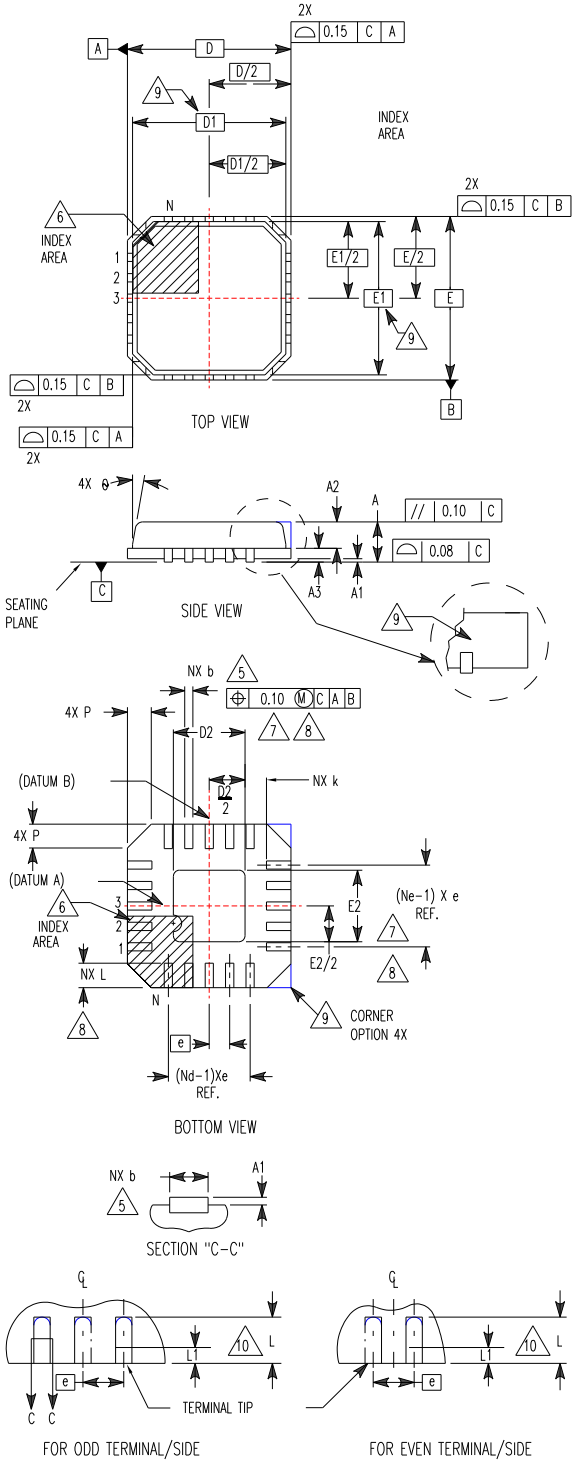

M8.15
8 Lead Narrow Body Small Outline Plastic Package
Rev 4, 1/12

For the most recent package outline drawing, see M8.15.

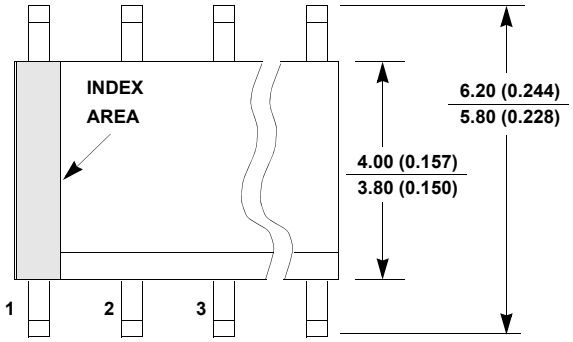

TOP VIEW

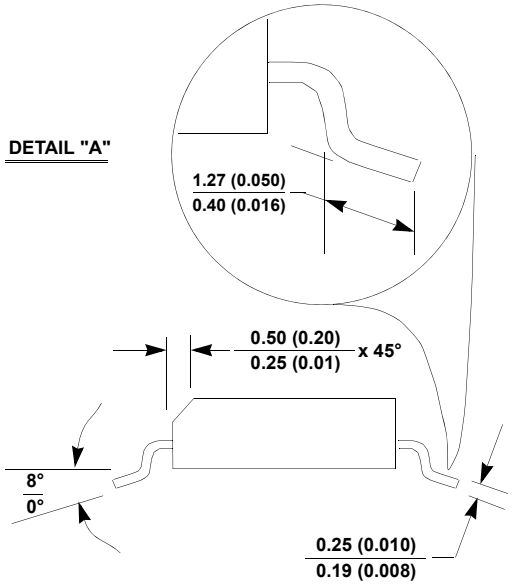

SIDE VIEW "B"

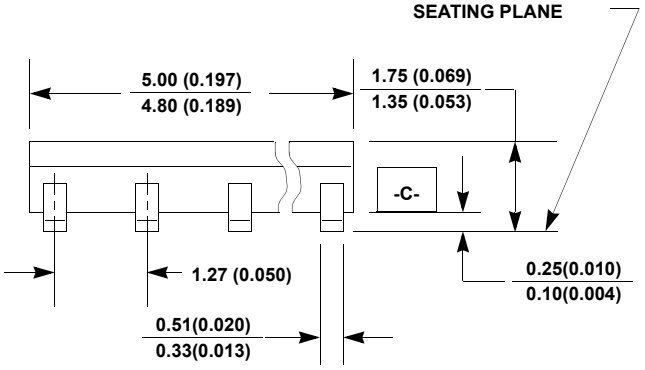

SIDE VIEW "A"

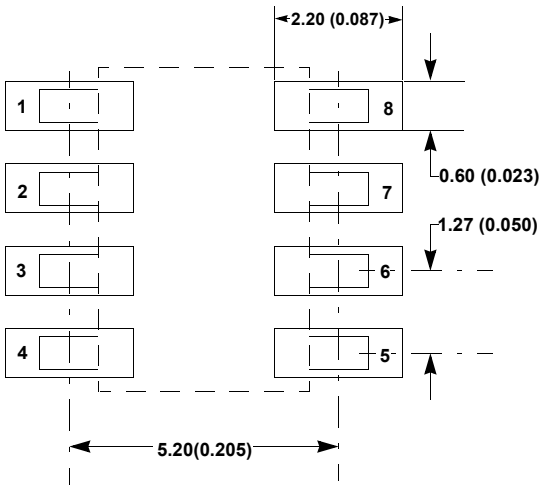

TYPICAL RECOMMENDED LAND PATTERN

NOTES:

1. Dimensioning and tolerancing per ANSI Y14.5M-1994.
2. **Package length does not include mold flash, protrusions or gate burrs. Mold flash, protrusion and gate burrs shall not exceed 0.15mm (0.006 inch) per side.**
3. **Package width does not include interlead flash or protrusions. Interlead flash and protrusions shall not exceed 0.25mm (0.010 inch) per side.**
4. **The chamfer on the body is optional. If it is not present, a visual index feature must be located within the crosshatched area.**
5. **Terminal numbers are shown for reference only.**
6. **The lead width as measured 0.36mm (0.014 inch) or greater above the seating plane, shall not exceed a maximum value of 0.61mm (0.024 inch).**
7. **Controlling dimension: MILLIMETER. Converted inch dimensions are not necessarily exact.**

For the most recent package outline drawing, see M8.15C.

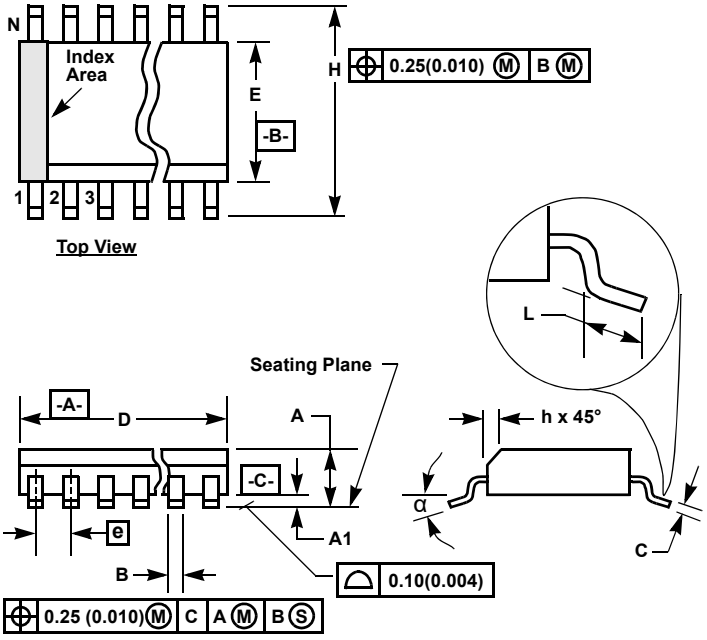

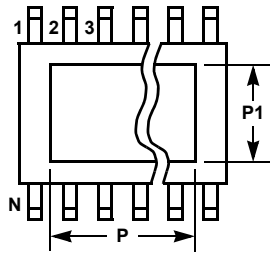

M8.15C
8 Lead Narrow Body Small Outline Exposed Pad
Plastic Package (EPSOIC)

Symbol	Inches		Millimeters		Notes
	Min	Max	Min	Max	
A	0.056	0.067	1.422	1.700	-
A1	0.0	0.005	0.0	0.13	-
B	0.0138	0.0192	0.35	0.49	9
C	0.0075	0.0098	0.19	0.25	-
D	0.189	0.196	4.80	4.98	3
E	0.150	0.157	3.811	3.99	4
e	0.050 BSC		1.27 BSC		-
H	0.230	0.244	5.84	6.20	-
h	0.010	0.016	0.25	0.41	5
L	0.016	0.035	0.406	0.89	6
N	8		8		7
α	0°	8°	0°	8°	-
P	-	0.126	-	3.200	11
P1	-	0.099	-	2.514	11

Rev. 2 5/19

Notes:

1. Symbols are defined in the “MO Series Symbol List” in Section 2.2 of Publication Number 95.
2. Dimensioning and tolerancing per ANSI Y14.5M-1982.
3. Dimension “D” does not include mold flash, protrusions or gate burrs. Mold flash, protrusion, and gate burrs shall not exceed 0.15mm (0.006 inch) per side.
4. Dimension “E” does not include interlead flash or protrusions. Interlead flash and protrusions shall not exceed 0.25mm (0.010 inch) per side.
5. The chamfer on the body is optional. If it is not present, a visual index feature must be located within the crosshatched area.
6. “L” is the length of terminal for soldering to a substrate.
7. “N” is the number of terminal positions.
8. Terminal numbers are shown for reference only.
9. The lead width “B”, as measured 0.36mm (0.014 inch) or greater above the seating plane, shall not exceed a maximum value of 0.61mm (0.024 inch).
10. Controlling dimension: Millimeter. Converted inch dimensions are not necessarily exact.
11. Dimensions “P” and “P1” are thermal and/or electrical enhanced variations. Values shown are maximum size of exposed pad within lead count and body size.

Notice

1. Descriptions of circuits, software and other related information in this document are provided only to illustrate the operation of semiconductor products and application examples. You are fully responsible for the incorporation or any other use of the circuits, software, and information in the design of your product or system. Renesas Electronics disclaims any and all liability for any losses and damages incurred by you or third parties arising from the use of these circuits, software, or information.
2. Renesas Electronics hereby expressly disclaims any warranties against and liability for infringement or any other claims involving patents, copyrights, or other intellectual property rights of third parties, by or arising from the use of Renesas Electronics products or technical information described in this document, including but not limited to, the product data, drawings, charts, programs, algorithms, and application examples.
3. No license, express, implied or otherwise, is granted hereby under any patents, copyrights or other intellectual property rights of Renesas Electronics or others.
4. You shall not alter, modify, copy, or reverse engineer any Renesas Electronics product, whether in whole or in part. Renesas Electronics disclaims any and all liability for any losses or damages incurred by you or third parties arising from such alteration, modification, copying or reverse engineering.
5. Renesas Electronics products are classified according to the following two quality grades: "Standard" and "High Quality". The intended applications for each Renesas Electronics product depends on the product's quality grade, as indicated below.
   "Standard": Computers; office equipment; communications equipment; test and measurement equipment; audio and visual equipment; home electronic appliances; machine tools; personal electronic equipment; industrial robots; etc.
   "High Quality": Transportation equipment (automobiles, trains, ships, etc.); traffic control (traffic lights); large-scale communication equipment; key financial terminal systems; safety control equipment; etc.
   Unless expressly designated as a high reliability product or a product for harsh environments in a Renesas Electronics data sheet or other Renesas Electronics document, Renesas Electronics products are not intended or authorized for use in products or systems that may pose a direct threat to human life or bodily injury (artificial life support devices or systems; surgical implantations; etc.), or may cause serious property damage (space system; undersea repeaters; nuclear power control systems; aircraft control systems; key plant systems; military equipment; etc.). Renesas Electronics disclaims any and all liability for any damages or losses incurred by you or any third parties arising from the use of any Renesas Electronics product that is inconsistent with any Renesas Electronics data sheet, user's manual or other Renesas Electronics document.
6. When using Renesas Electronics products, refer to the latest product information (data sheets, user's manuals, application notes, "General Notes for Handling and Using Semiconductor Devices" in the reliability handbook, etc.), and ensure that usage conditions are within the ranges specified by Renesas Electronics with respect to maximum ratings, operating power supply voltage range, heat dissipation characteristics, installation, etc. Renesas Electronics disclaims any and all liability for any malfunctions, failure or accident arising out of the use of Renesas Electronics products outside of such specified ranges.
7. Although Renesas Electronics endeavors to improve the quality and reliability of Renesas Electronics products, semiconductor products have specific characteristics, such as the occurrence of failure at a certain rate and malfunctions under certain use conditions. Unless designated as a high reliability product or a product for harsh environments in a Renesas Electronics data sheet or other Renesas Electronics document, Renesas Electronics products are not subject to radiation resistance design. You are responsible for implementing safety measures to guard against the possibility of bodily injury, injury or damage caused by fire, and/or danger to the public in the event of a failure or malfunction of Renesas Electronics products, such as safety design for hardware and software, including but not limited to redundancy, fire control and malfunction prevention, appropriate treatment for aging degradation or any other appropriate measures. Because the evaluation of microcomputer software alone is very difficult and impractical, you are responsible for evaluating the safety of the final products or systems manufactured by you.
8. Please contact a Renesas Electronics sales office for details as to environmental matters such as the environmental compatibility of each Renesas Electronics product. You are responsible for carefully and sufficiently investigating applicable laws and regulations that regulate the inclusion or use of controlled substances, including without limitation, the EU RoHS Directive, and using Renesas Electronics products in compliance with all these applicable laws and regulations. Renesas Electronics disclaims any and all liability for damages or losses occurring as a result of your noncompliance with applicable laws and regulations.
9. Renesas Electronics products and technologies shall not be used for or incorporated into any products or systems whose manufacture, use, or sale is prohibited under any applicable domestic or foreign laws or regulations. You shall comply with any applicable export control laws and regulations promulgated and administered by the governments of any countries asserting jurisdiction over the parties or transactions.
10. It is the responsibility of the buyer or distributor of Renesas Electronics products, or any other party who distributes, disposes of, or otherwise sells or transfers the product to a third party, to notify such third party in advance of the contents and conditions set forth in this document.
11. This document shall not be reprinted, reproduced or duplicated in any form, in whole or in part, without prior written consent of Renesas Electronics.
12. Please contact a Renesas Electronics sales office if you have any questions regarding the information contained in this document or Renesas Electronics products.

(Note1) "Renesas Electronics" as used in this document means Renesas Electronics Corporation and also includes its directly or indirectly controlled subsidiaries.
(Note2) "Renesas Electronics product(s)" means any product developed or manufactured by or for Renesas Electronics.

(Rev.4.0-1 November 2017)

Corporate Headquarters

TOYOSU FORESIA, 3-2-24 Toyosu,
Koto-ku, Tokyo 135-0061, Japan
www.renesas.com

Contact Information

For further information on a product, technology, the most up-to-date version of a document, or your nearest sales office, please visit:
www.renesas.com/contact/

Trademarks

Renesas and the Renesas logo are trademarks of Renesas Electronics Corporation. All trademarks and registered trademarks are the property of their respective owners.

© 2019 Renesas Electronics Corporation. All rights reserved.