NOTE
All numerical values are in metric units [with U.S. customary units in brackets]. Dimensions are in millimeters. Unless otherwise specified, dimensions have a tolerance of ±0.10 and angles have a tolerance of ±2°. Figures and illustrations are for identification only and are not drawn to scale.

1. INTRODUCTION

This application guideline covers the requirements for application of the LUMAWISE Drive Type Z50 LED Holder (hereafter referred to as LUMAWISE Drive). The LUMAWISE Drive allows direct attachment of the LED to a cooling device using two customer-supplied M3 or No. 4-40 with minimum length of 12mm mounting screws and has a 4 position CT connector (292228-4) to power and regulate the onboard driver.

The LUMAWISE Drive features a COB opening, 292228-4 Mini CT Connector and two screw holes that each accept a screw for mounting. The COB opening accepts the COB, and a visible LED minus (-) & plus (+) polarity indicator on the bottom of the LUMAWISE Drive indicates orientation of the COB.

When corresponding with personnel, use the terminology provided in this specification to facilitate inquiries for information. Basic terms and features of this product are provided in Figure 1.

Example of the LUMAWISE Drive Type Z50

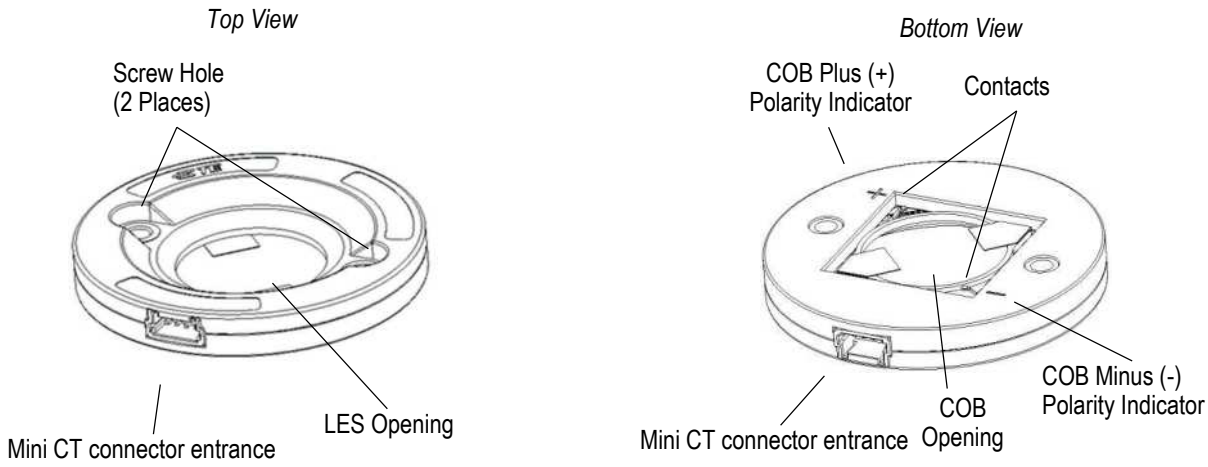

Figure 1

2. REFERENCE MATERIAL

2.1. Customer Assistance

Reference Product Base Part Number x-2213699-y (on/off version) and x-2316510-y (0-10V version) are representative of the LUMAWISE Drive Type Z50 platform. Use of these numbers will identify the product line and help you to obtain product and tooling information. Such information can be obtained through a local Representative, by visiting our website at www.te.com, or by calling PRODUCT INFORMATION or the TOOLING ASSISTANCE CENTER at the numbers at the bottom of this page.

© 2017 TE Connectivity Ltd. family of companies.
All Rights Reserved.
*Trademark

TE Connectivity, TE connectivity (logo), and TE (logo) are trademarks. Other logos, product, and/or company names may be trademarks of their respective owners.

2.2. Specifications

Product Specification 108-133082 provides product performance and test information.

2.3. Instructional Material

Instruction Sheets (408-series) provide product assembly instructions.

2.4. Datasheet

Datasheet 1-1773935-6 provides general information about the product.

3. REQUIREMENTS

3.1. Safety

Do not stack product shipping containers so high that the containers buckle or deform.

It is recommended using the LUMAWISE Drive (in combination with the COB) with low-voltage low energy circuits supplied from a class 2 or low-voltage limited energy (LVLE) power source, for EU Class I or II. Input and output of the power supply should be isolated from each other.

3.2. Storage

The LUMAWISE Drive should remain in the shipping containers until ready for use to prevent deformation to the contacts. The LED holders must be stored in a temperature range of -20 to 60°C [-4 to 140°F] and used within 1 year from the date code located on the bottom of the holder. The LUMAWISE Drive should be used on a first in, first out basis to avoid storage contamination that could adversely affect performance.

3.3. Functional overview

Figure 2 show an overview of the functional blocks of the LUMAWISE Drive per version.

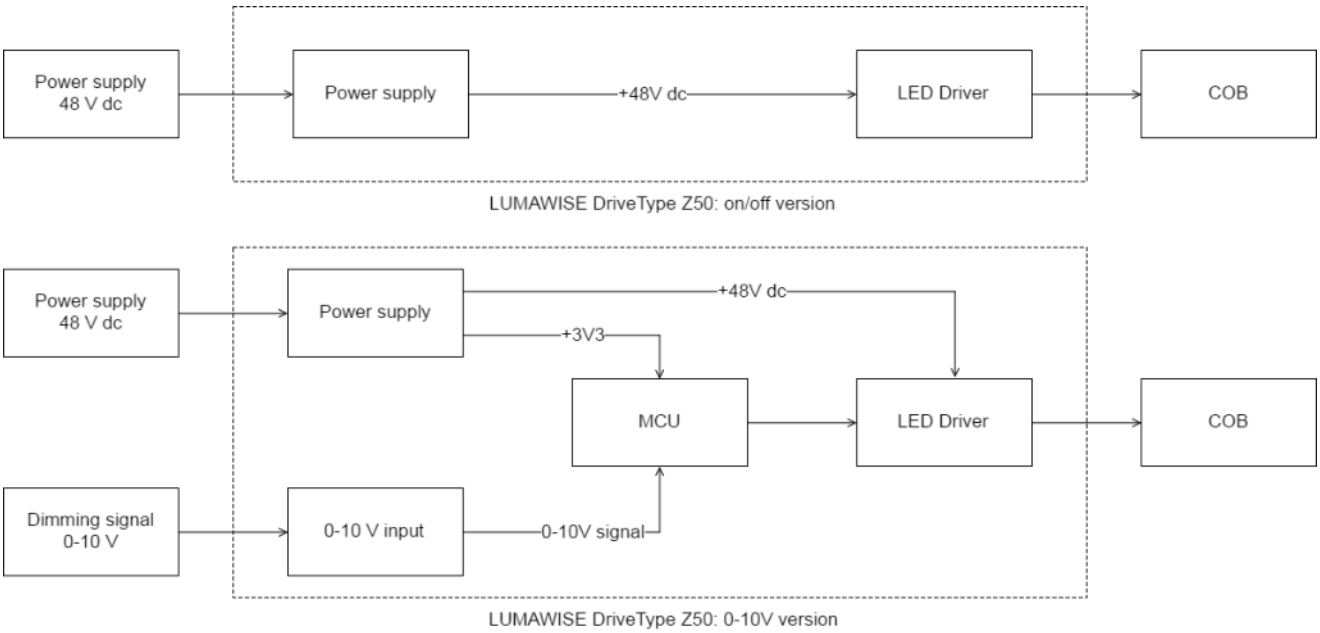

Figure 2

3.4. Signal information

Table 1 provide the pin numbers with signal names and description of the Mini CT Connector.

Pin	Signal	Description
1	DIM+	Supply 0-10 V dc of dimming signal, sink dimmer, fixed or variable resistor. Not applicable for on/off version.
2	DIM-, GND	Supply common of dimming signal, sink dimmer, fixed or variable resistor. Not applicable for on/off version.
3	48 V_{in} (+)	48 V dc from power supply
4	48 V_{in} (-), GND	Common from 48 V dc power supply

Table 1

3.5. Power supply

A European class I & II or US NEC class 2 constant voltage supply, with isolated output of 48 V dc ± 10 % must be used to power the LUMAWISE Drive. Maximum voltage output should not exceed 60 V dc. Input signal needs to be applied to line P3 48 V_{in} (+) and P4 48 V_{in} (-), GND of the connector. By removing/adding power to the system, the LUMAWISE Drive turns off/on for both versions.

3.6. Dimming performance

To regulate the LED light intensity, a signal needs to be applied to line P1 (Dim+) and line P2 (Dim-, GND). If no signal is applied to P1, the output current is at maximum level. The actual dimming curve is shown in Figure 3.

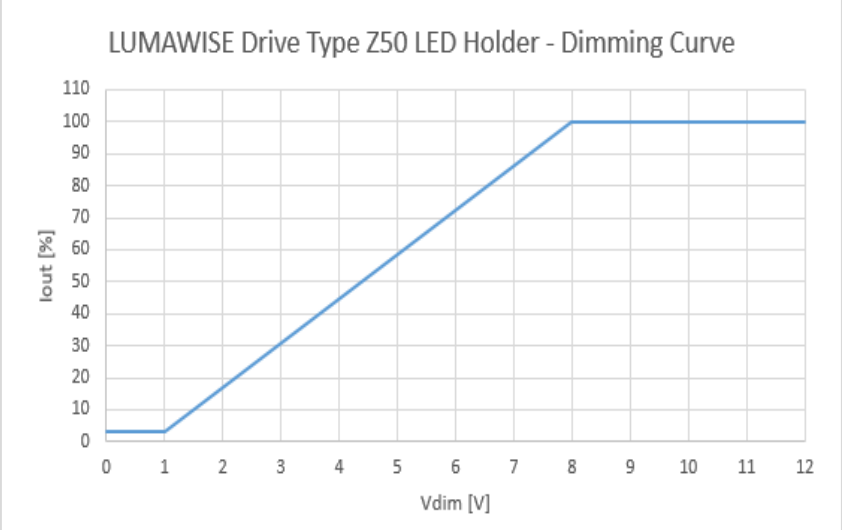

Figure 3

Product is compatible with 0-10 V dc sink dimmers, 0-10 V dc source systems and 100 kΩ potentiometers, no class restrictions. If no dimmer is connected, output current is at maximum level. LUMAWISE Drive works also with IEC 60929 Annex E controllers.

3.7. COB

A COB of the following dimensions, 16x19 mm, 19x19 mm, 20x24 mm, 24x24 mm, can be used in combination with the LUMAWISE Drive. The forward voltage range needs to comply with the typical forward voltage of 36 V

dc of the LUMAWISE Drive to achieve the efficiency of 93 %. If the forward voltage of the COB does not comply with the typical forward voltage of 36 V dc, but is within the output range of 25 - 41 V dc, the LUMAWISE Drive operates with a lower efficiency.

Check if the position of the contact pads corresponds with the position of the contacts of the LUMAWISE Drive as shown in Figure 4. The contact points correspond with the Zhaga Book 12 COB dimensions. The Customer Drawing (C-2213699 and C-2316510) includes a list with compatible COBs, for other COB types, please contact TE Connectivity.

COB contact pads

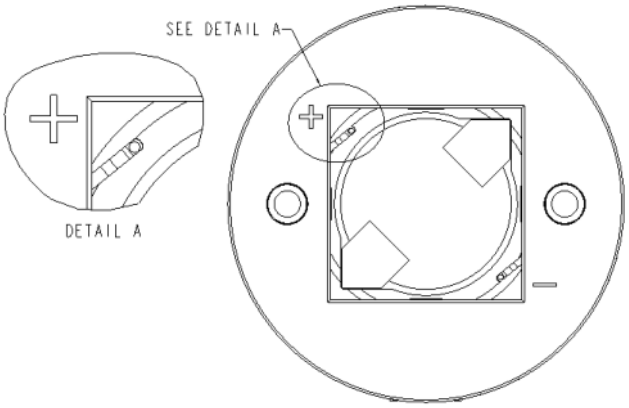

Note: Not to scale

Figure 4

3.8. Thermal management

The LUMAWISE Drive is rated for 125 °C maximum operating temperature, measured at the driver chip. A Thermal Interface Material (TIM) is needed in between the cooling device (heatsink) and LUMAWISE Drive with COB. An appropriate cooling device must be designed to ensure chip rated temperature of maximum 125 °C is observed. Suggested TIM material is from Laird Technologies PN: AS00444-25 and is available to purchase through distributors.

A development kit is available for customers to perform initial tests and investigations. TE offers several variants of LUMAWISE Drive as development kits. The kit includes, a LUMAWISE Drive, a Mini CT connector cable assembly and a TIM sheet. These kits are available to purchase through various distributors. The available part numbers are listed in Table 2.

A temperature test point (Tc) is provided on the PCBA close to the driver chip (shown in Step 3) for tracking chip temperature. The temperature difference between the driver chip and the Tc is 15 °C. Tc temperature should not exceed 110 °C. Below instruction on how to measure the Tc temperature.

If the Tc point exceed the maximum temperature, the product goes in over-temperature protection mode. The output level will be reduced to 20 % of the maximum output level. The dimmable version needs to be switched off and on to exit this state, the on/off version will cycle from 20 % output level to full power every 3 minutes to indicate this event.

The dimmable version collects data of every over-temperature event which did take place and this data is only accessible for TE Connectivity.

Step 1: Removing Top Cover

Push the cover wall inwards with fingers to disengage snaps. Disengage as per below shown order only.

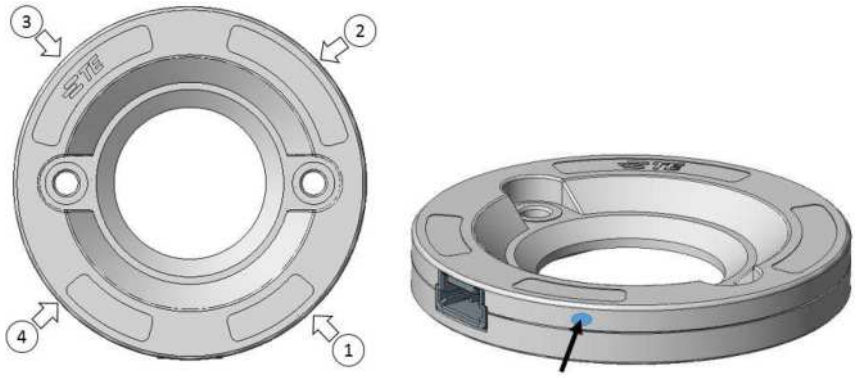

Step 2: Making hole in Top cover for Thermocouple wire

Drill a hole of approximately 1.2 time the size of the thermocouple wire at the marked location and pass the Thermocouple wire through the hole.

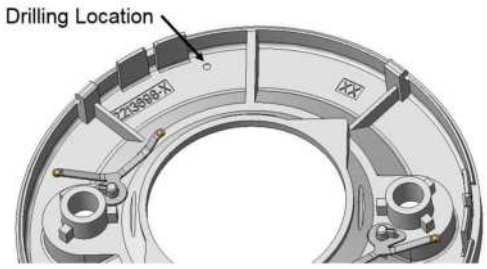

Step 3: Soldering Thermocouple to Tc point

Solder thermocouple to the Tc point pad on PCBA. Ensure adequate heat is applied for soldering.

Recommended thermocouple: Type K welded tip, Tip diameter 0.6 mm

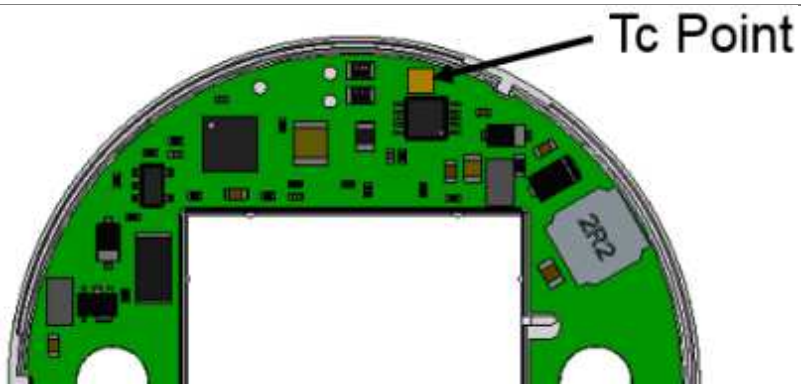

Re-assemble the Cover and ready for the test.

Kit Part Number	Product Type	LED size	Output Current
2323859-1	0-10 V Dimming	19x19	350 mA
2323859-2	0-10 V Dimming	16x19	350 mA
1-2323859-1	0-10 V Dimming	20x24	500 mA
1-2323859-2	0-10 V Dimming	19x19	500 mA
1-2323859-3	0-10 V Dimming	16x19	500 mA
2-2323859-1	0-10 V Dimming	24x24	700 mA
2-2323859-2	0-10 V Dimming	20x24	700 mA
2-2323859-3	0-10 V Dimming	19x19	700 mA
2-2323859-4	0-10 V Dimming	16x19	700 mA
3-2323859-1	0-10 V Dimming	24x24	1050 mA
3-2323859-2	0-10 V Dimming	20x24	1050 mA
3-2323859-3	0-10 V Dimming	19x19	1050 mA
5-2323859-1	On-Off	19x19	350 mA
5-2323859-2	On-Off	16x19	350 mA
6-2323859-1	On-Off	20x24	500 mA
6-2323859-2	On-Off	19x19	500 mA
6-2323859-3	On-Off	16x19	500 mA
7-2323859-1	On-Off	24x24	700 mA
7-2323859-2	On-Off	20x24	700 mA
7-2323859-3	On-Off	19x19	700 mA
7-2323859-4	On-Off	16x19	700 mA
8-2323859-1	On-Off	24x24	1050 mA
8-2323859-2	On-Off	20x24	1050 mA
8-2323859-3	On-Off	19x19	1050 mA

Table 2

3.9. Connecting the LUMAWISE Drive

Connecting the LUMAWISE Drive is done with the below showed cable assembly. The Mini CT mating connector has part number 353908-4.

Connector overview and connection scheme

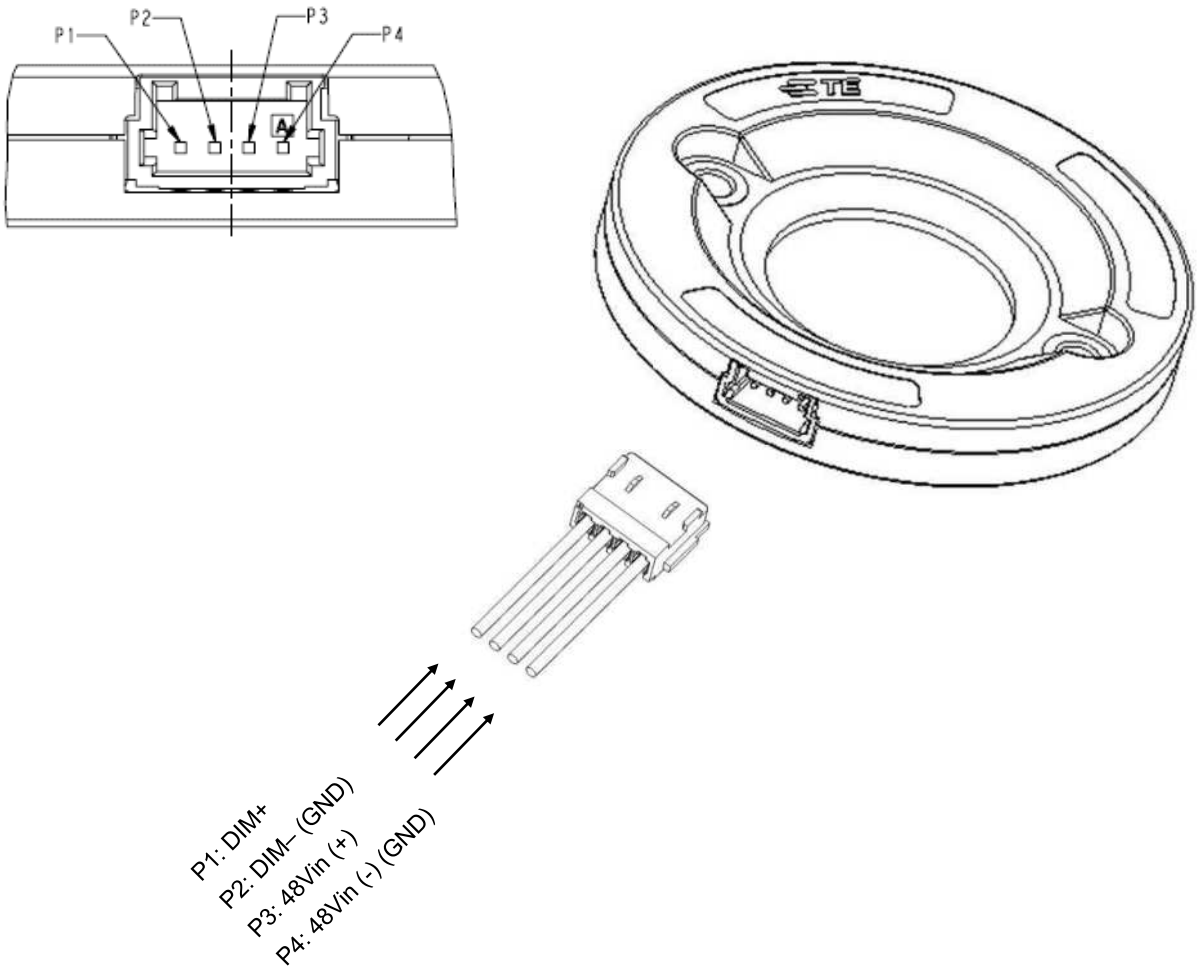

Note: Not to scale

Figure 5

3.10. Mounting Hole Pattern

The cooling device must be clean and flat with no crowns or peaks in the mounting area. The recommended mounting hole pattern (not to scale) is provided on the customer drawing for the LUMAWISE Drive and is shown in Figure 6, Mounting Hole Pattern.

After the holes are drilled and tapped, the surface must be cleaned with isopropyl alcohol. It is recommended to install a paste or phase-change type thermal interface material (TIM) onto the COB area of the cooling device.

Please note the holder is designed for flathead screws only.

Mounting hole pattern

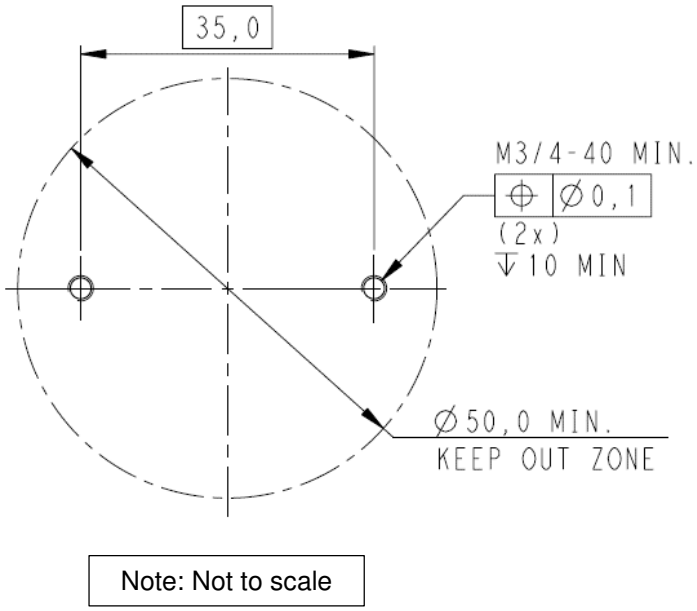

Figure 6

3.11. Reflector and optic clip

The LUMAWISE Drive is compatible with the Z50 optic clip type 1 and type 2 (part numbers: 2213194 and 2213349) to attach a reflector to the LUMAWISE Drive in order to create a directional beam of light. For assembly instructions, please refer to the application sheet of the optic clip.

3.12. Assembly

CAUTION
The LUMAWISE Drive is designed for use in a ventilated environment that allows volatile organic compound (VOC) escaping. To avoid damage to the LED, reflection of LED light from a diffuser directly onto the surface of the LUMAWISE Drive must be prevented as much as possible.

1. The LUMAWISE Drive is suitable for the following COB sizes: 16x19 mm, 19x19 mm, 20x24 mm, 24x24 mm. All with a nominal thickness of 1 mm.

2. Remove release liner of adhesive tape, insert the COB and ensure you do not press the light emitting (yellow part) part of the COB. The LED polarity indicator must be observed when orienting the COB into the COB opening. Light pressure need to be applied to the bottom of the COB to overcome the resistance of the crush ribs, which ensures centralization of the COB in the LUMAWISE Drive. The COB will stay in place thanks to the adhesive tape. See Figure 7, details A.

CAUTION
To avoid damage to the LED, the COB must be properly positioned and seated in the LUMAWISE Drive. If not, the COB could crack when mounting the LUMAWISE Drive to the cooling device.

3. The LUMAWISE Drive (bottom side) must be placed on the cooling device with TIM material recommended phase change style or grease in between, so that the screws holes align over the holes in the cooling device. The LUMAWISE Drive must be secured to the cooling device using two customer-supplied M3 or No. 4-40 with minimum length of 12 mm mounting screws. Each mounting screw should be tightened to a torque between 0.4 Nm and 0.6 Nm [3.45 and 5.31 in.-lb]. See Figure 7, detail B.

4. Insert the Mini CT connector into the socket before energizing, please ensure the keying is in the correct position. See Figure 7, detail C.

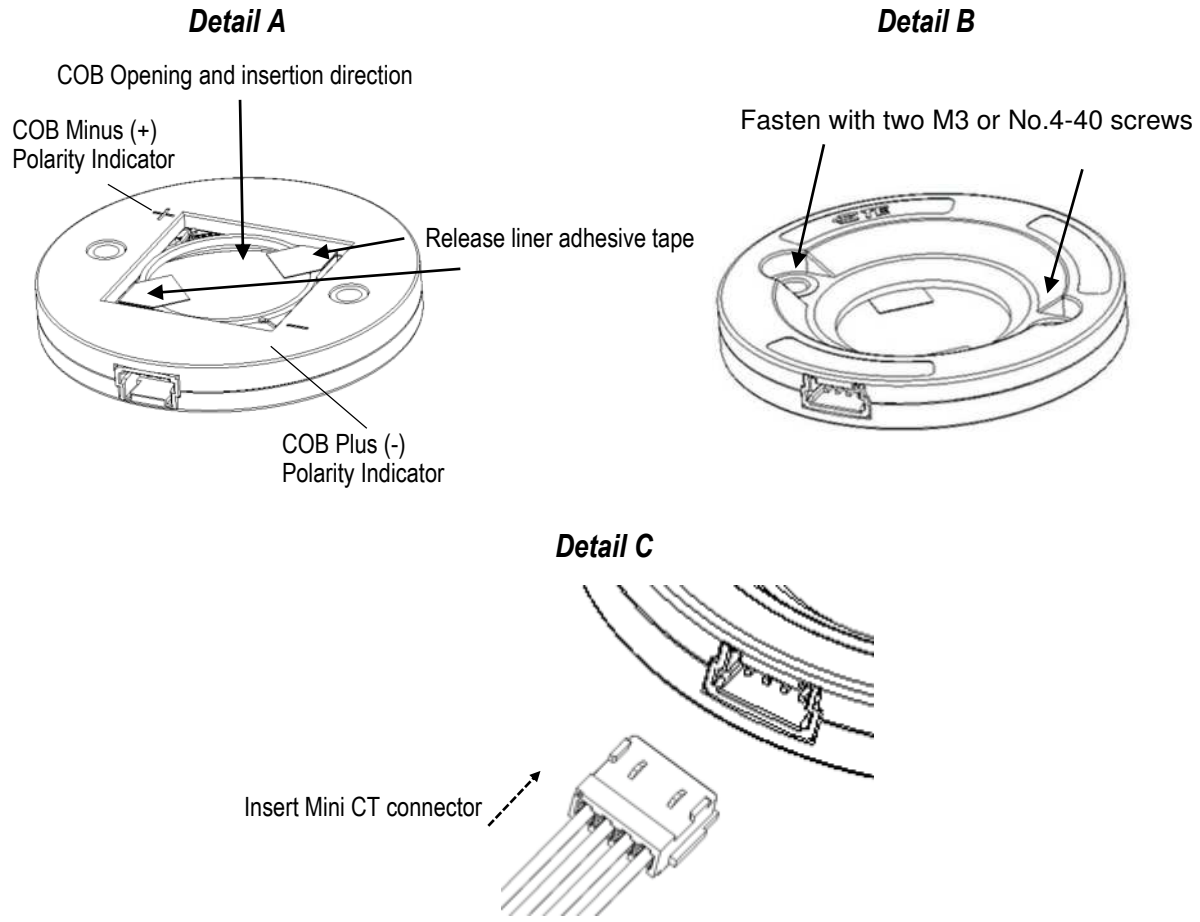

Figure 7

3.13. Removal

The LUMAWISE Drive can be removed from the cooling device by removing the customer-supplied mounting screws. TIM material must be removed from heatsink and holder and new need to be applied.

3.14. Replacement and Repair

Defective or damaged LUMAWISE Drive products must not be used.

3.15. Luminaire

Luminaire needs to designed in a way that no dust can accumulate on the holder or LED and humidity will remain within the set limits.

4. QUALIFICATION

501- 19243	TE Connectivity product qualification report
IEC 60838-2-2	Dekra certificate number: NL-48427
IEC 61347-2-13	Dekra certificate number: NL-48427
IEC 55016	Dekra certificate number: ??
IEC 61000-3-2	Dekra certificate number: ??
UL 8754	UL file number: E46927, Vol 1;2
UL 8750	UL file number: E46927, Vol 1;2

5. TOOLING

A suitable screwdriver with a torque limitation is required to tighten the customer-supplied mounting screws for mounting the LUMAWISE Drive to the cooling device.