EL7232

Dual Channel, High Speed, High Current Line Driver with 3-State

FN7283
Rev 4.00
November 12, 2015

The EL7232 3-state drivers are particularly well suited for ATE and microprocessor based applications. The low quiescent power dissipation makes this part attractive in battery applications. The 2A peak drive capability, makes the EL7232 an excellent choice when driving high speed capacitive lines, as well. The input circuitry provides level shifting from TTL levels to the supply rails. The EL7232 is available in 8 Ld PDIP and 8 Ld SO packages.

Ordering Information

PART NUMBER	PART MARKING	PACKAGE	PKG. DWG. #
EL7232CN **No longer available or supported, recommended replacement: EL7232CNZ**	EL7232CN	8 Ld PDIP	E8.3
EL7232CNZ (Note)	EL7232CN Z	8 Ld PDIP**	E8.3
EL7232CSZ (Note)	7232CSZ	8 Ld SOIC (Pb-free)	M8.15E
EL7232CSZ-T7* (Note)	7232CSZ	8 Ld SOIC (Pb-free) Tape and Reel	M8.15E
EL7232CSZ-T13* (Note)	7232CSZ	8 Ld SOIC (Pb-free) Tape and Reel	M8.15E

*-T7" suffix for 1k unit or "-T13" suffix for 2.5k unit Tape and Reel options. Please refer to TB347 for details on reel specifications.
**Pb-free PDIPs can be used for through hole wave solder processing only. They are not intended for use in Reflow solder processing applications.
NOTE: These Intersil Pb-free plastic packaged products employ special Pb-free material sets; molding compounds/die attach materials and 100% matte tin plate PLUS ANNEAL - e3 termination finish, which is RoHS compliant and compatible with both SnPb and Pb-free soldering operations. Intersil Pb-free products are MSL classified at Pb-free peak reflow temperatures that meet or exceed the Pb-free requirements of IPC/JEDEC J STD-020.

Features

- 3-State output
- 3V and 5V input compatible
- Clocking speeds up to 10MHz
- 20ns Switching/delay time
- 2A Peak drive
- Low, matched output impedance 5Ω
- Low quiescent current 2.5mA
- Wide operating voltage 4.5V to 16V
- Pb-free available (RoHS compliant)

Applications

- Parallel bus line drivers
- EPROM and PROM programming
- Motor controls
- Charge pumps
- Sampling circuits
- Pin drivers
- Bridge circuits

Pinout

EL7232
(8 LD PDIP, SO)
TOP VIEW

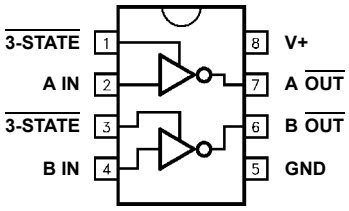

Manufactured under U.S. Patent Nos. 5,334,883, #5,341,047

Truth Table

3-STATE	INPUT	OUTPUT
1	0	1
1	1	0
0	0	Open
0	1	Open

Absolute Maximum Ratings (T_A = +25°C)

Supply (V+ to Gnd) 16.5V
Input Pins . . . . . -0.3V to +0.3V above V+
Combined Peak Output Current. 4A

Thermal Information

Operating Junction Temperature . . . . . +125°C
Storage Temperature Range . . . . . -65°C to +150°C
Ambient Operating Temperature . . . . . -40°C to +85°C
Power Dissipation
SOIC 570mW
PDIP. 1050mW
Pb-free reflow profile . . . . . .see link below
http://www.intersil.com/pbfree/Pb-FreeReflow.asp

CAUTION: Do not operate at or near the maximum ratings listed for extended periods of time. Exposure to such conditions may adversely impact product reliability and result in failures not covered by warranty.

IMPORTANT NOTE: All parameters having Min/Max specifications are guaranteed. Typical values are for information purposes only. Unless otherwise noted, all tests are at the specified temperature and are pulsed tests, therefore: $T_J = T_C = T_A$

DC Electrical Specifications T_A = +25°C, V = 15V unless otherwise specified.

PARAMETER	DESCRIPTION	TEST CONDITIONS	MIN	TYP	MAX	UNITS
INPUT						
V_{IH}	Logic “1” Input Voltage		2.4			V
I_{IH}	Logic “1” Input Current	@V+		0.1	10	µA
V_{IL}	Logic “0” Input Voltage				0.8	V
I_{IL}	Logic “0” Input Current	@0V		0.1	10	µA
V_{HVS}	Input Hysteresis			0.3		V
OUTPUT						
R_{OH}	Pull-Up Resistance	I_{OUT} = -100mA		3	6	Ω
R_{OL}	Pull-Down Resistance	I_{OUT} = +100mA		4	6	Ω
I_{OFF}	3-State Output Leakage	V_{OUT} = V+ V_{OUT} = 0V	0.2		10	µA
I_{PK}	Peak Output Current	Source Sink		2.0 2.0		A
I_{DC}	Continuous Output Current	Source/Sink	100			mA
POWER SUPPLY						
I_S	Power Supply Current	Inputs High		1	2.5	mA
V_S	Operating Voltage		4.5		16	V

AC Electrical Specifications T_A = +25°C, V = 15V unless otherwise specified.

PARAMETER	DESCRIPTION	TEST CONDITIONS	MIN	TYP	MAX	UNITS
SWITCHING CHARACTERISTICS						
t_R	Rise Time	C_L = 500pF C_L = 1000pF		7.5 10		ns
t_F	Fall Time	C_L = 500pF C_L = 1000pF		10 13	 20	ns
t_{D-ON}	Turn-On Delay Time			18	25	ns
t_{D-OFF}	Turn-Off Delay Time			20	25	ns
HIZ_{-ON}	Three-State Delay, Enable			22		ns
HIZ_{-OFF}	Three-State Delay, Disable			22		ns

Timing Table

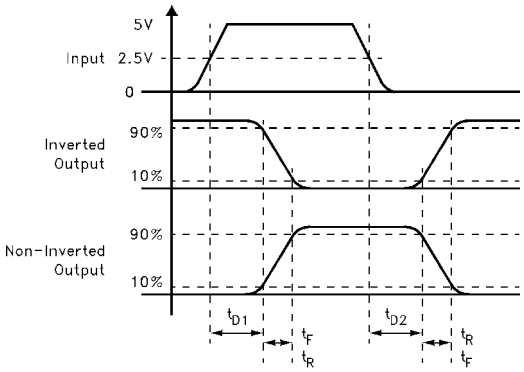

Standard Test Configuration

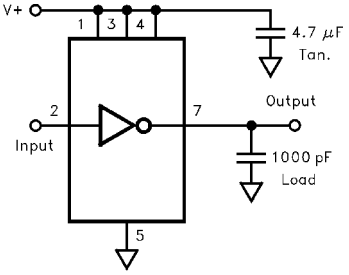

Simplified Schematic

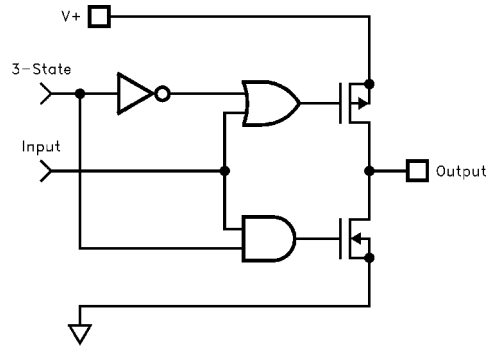

Typical Performance Curves

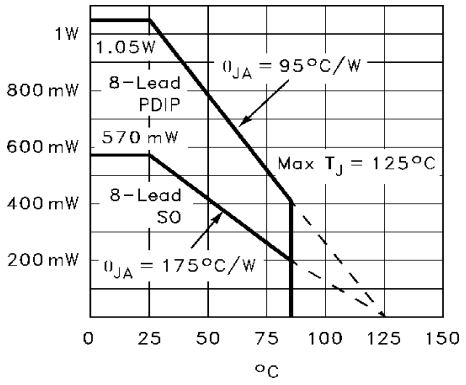

FIGURE 1. MAX POWER/DERATING CURVES

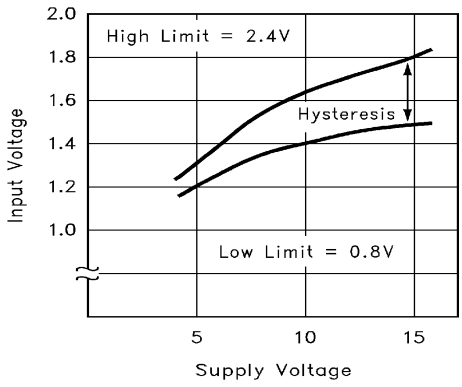

FIGURE 2. SWITCH THRESHOLD vs SUPPLY VOLTAGE

Typical Performance Curves (Continued)

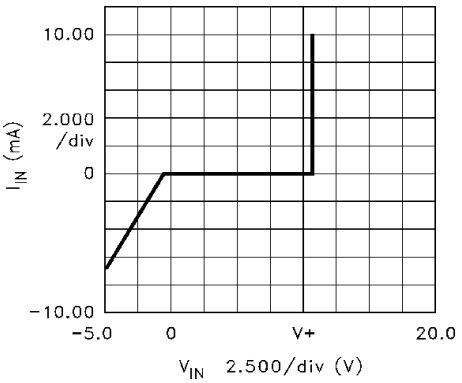

FIGURE 3. INPUT CURRENT vs VOLTAGE

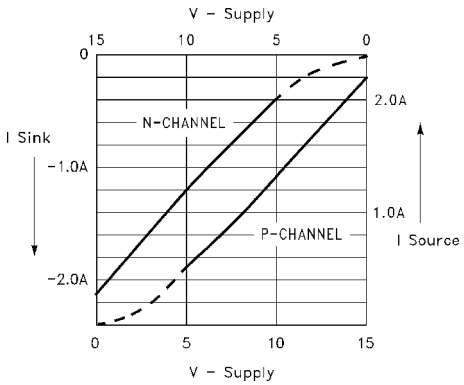

FIGURE 4. PEAK DRIVE vs SUPPLY VOLTAGE

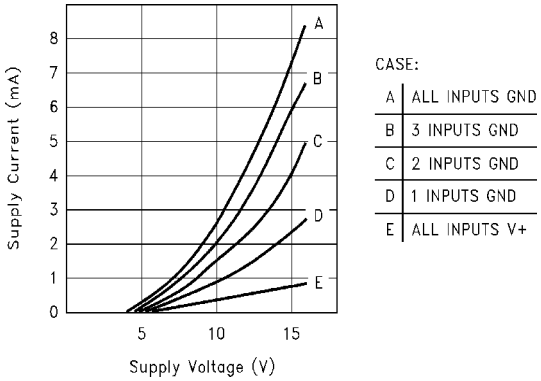

FIGURE 5. QUIESCENT SUPPLY CURRENT

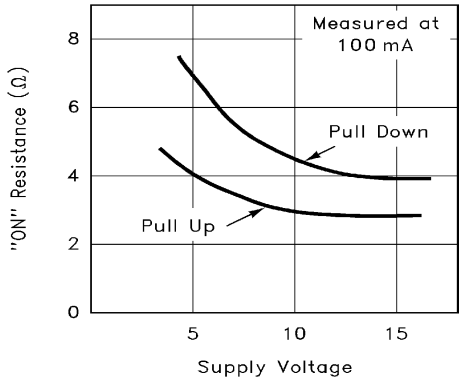

FIGURE 6. ON-RESISTANCE vs SUPPLY VOLTAGE

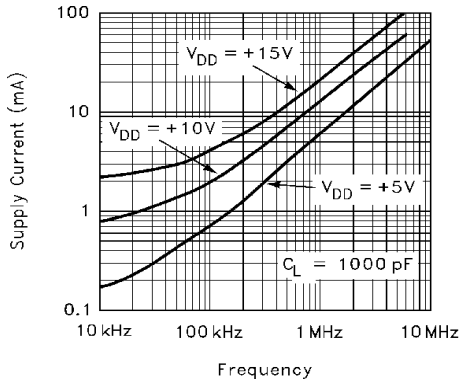

FIGURE 7. AVERAGE SUPPLY CURRENT vs VOLTAGE AND FREQUENCY

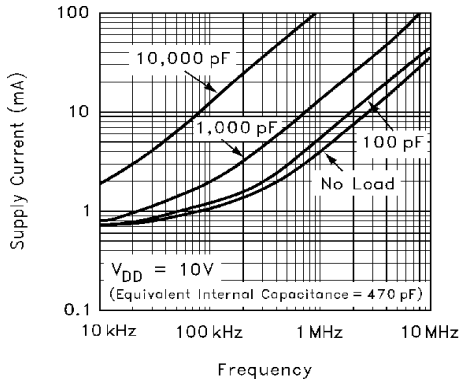

FIGURE 8. AVERAGE SUPPLY CURRENT vs CAPACITIVE LOAD

Typical Performance Curves (Continued)

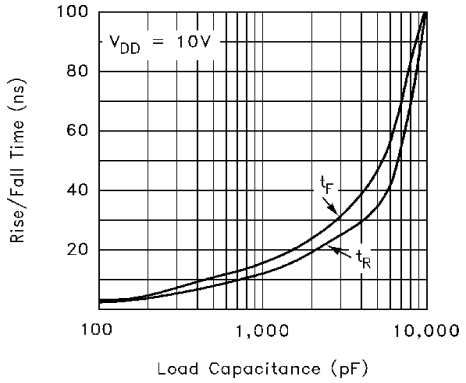

FIGURE 9. RISE/FALL TIME vs LOAD

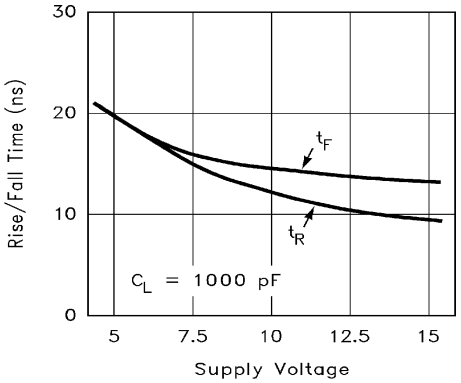

FIGURE 10. RISE/FALL TIME vs SUPPLY VOLTAGE

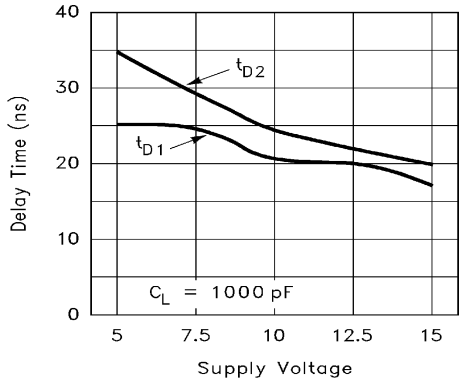

FIGURE 11. PROPAGATION DELAY vs SUPPLY VOLTAGE

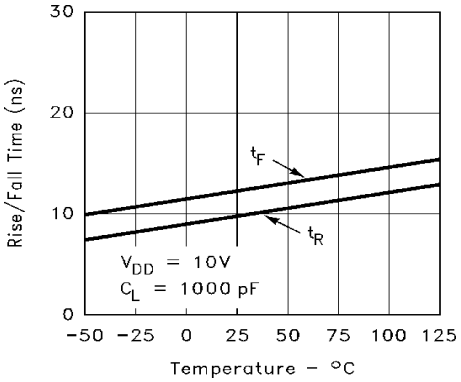

FIGURE 12. RISE/FALL TIME vs TEMPERATURE

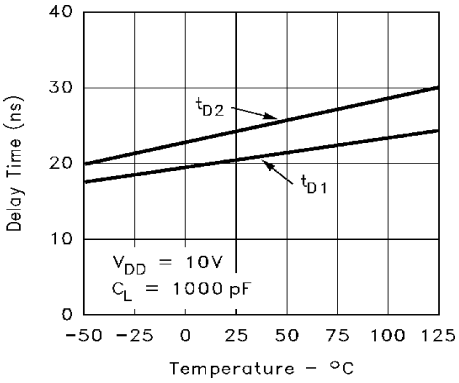

FIGURE 13. PROPAGATION DELAY vs TEMPERATURE

Revision History

The revision history provided is for informational purposes only and is believed to be accurate, but not warranted. Please go to the web to make sure that you have the latest revision.

DATE	REVISION	CHANGE
November 12, 2015	FN7283.4	Added Rev History and About Intersil Verbiage. Updated Ordering Information on page 1 Updated POD MDP0031 to E8.3 Updated POD MDP0027 to M8.15E

About Intersil

Intersil Corporation is a leading provider of innovative power management and precision analog solutions. The company's products address some of the largest markets within the industrial and infrastructure, mobile computing and high-end consumer markets.

For the most updated datasheet, application notes, related documentation and related parts, please see the respective product information page found at www.intersil.com.

You may report errors or suggestions for improving this datasheet by visiting www.intersil.com/ask.

Reliability reports are also available from our website at www.intersil.com/support

Package Outline Drawing

M8.15E

8 LEAD NARROW BODY SMALL OUTLINE PLASTIC PACKAGE
Rev 0, 08/09

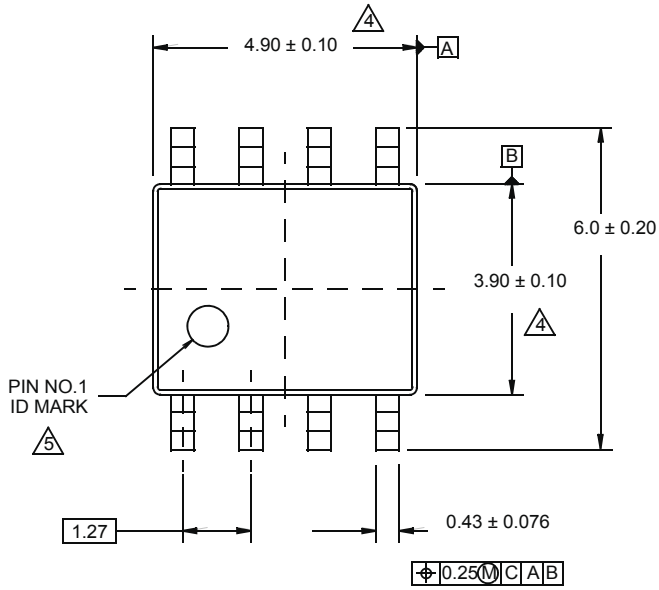

TOP VIEW

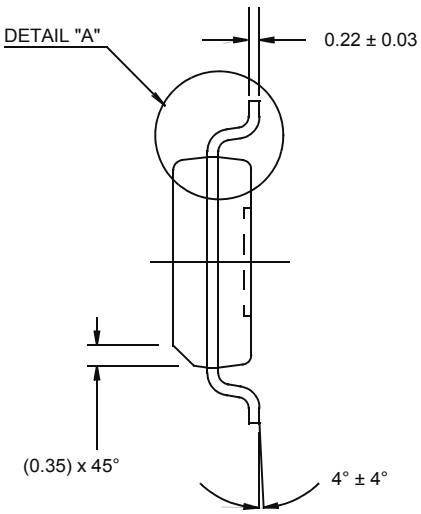

SIDE VIEW "B"

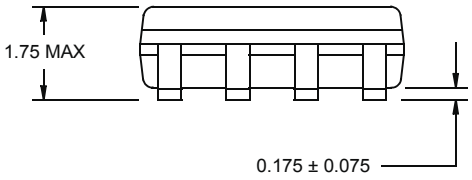

SIDE VIEW "A"

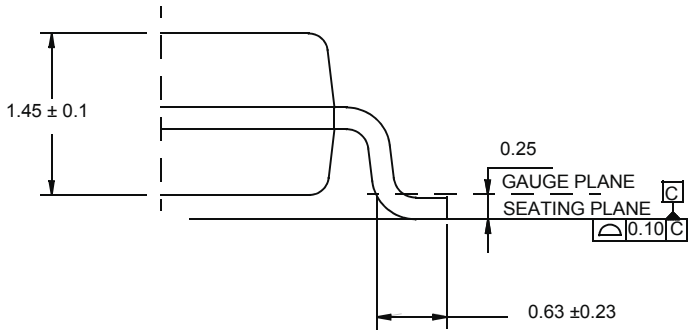

DETAIL "A"

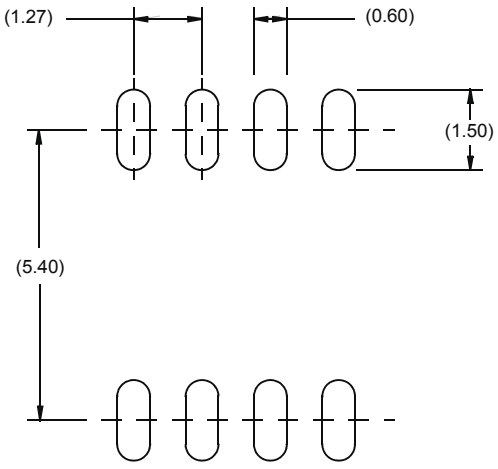

TYPICAL RECOMMENDED LAND PATTERN

NOTES:

1. Dimensions are in millimeters.
   Dimensions in ( ) for Reference Only.
2. Dimensioning and tolerancing conform to AMSE Y14.5m-1994.
3. Unless otherwise specified, tolerance : Decimal ± 0.05
4. Dimension does not include interlead flash or protrusions.
   Interlead flash or protrusions shall not exceed 0.25mm per side.
5. The pin #1 identifier may be either a mold or mark feature.
6. Reference to JEDEC MS-012.

Dual-In-Line Plastic Packages (PDIP)

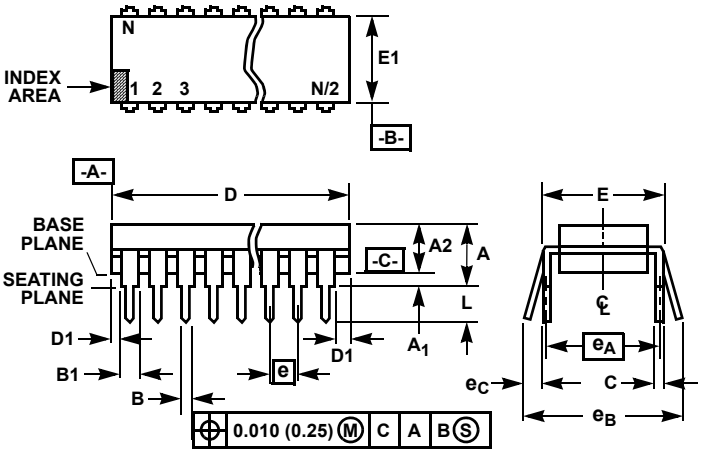

E8.3 (JEDEC MS-001-BA ISSUE D)
8 LEAD DUAL-IN-LINE PLASTIC PACKAGE

SYMBOL	INCHES		MILLIMETERS		NOTES
	MIN	MAX	MIN	MAX	
A	-	0.210	-	5.33	4
A1	0.015	-	0.39	-	4
A2	0.115	0.195	2.93	4.95	-
B	0.014	0.022	0.356	0.558	-
B1	0.045	0.070	1.15	1.77	8, 10
C	0.008	0.014	0.204	0.355	-
D	0.355	0.400	9.01	10.16	5
D1	0.005	-	0.13	-	5
E	0.300	0.325	7.62	8.25	6
E1	0.240	0.280	6.10	7.11	5
e	0.100 BSC		2.54 BSC		-
e_A	0.300 BSC		7.62 BSC		6
e_B	-	0.430	-	10.92	7
L	0.115	0.150	2.93	3.81	4
N	8		8		9

Rev. 0 12/93

NOTES:

1. Controlling Dimensions: INCH. In case of conflict between English and Metric dimensions, the inch dimensions control.
2. Dimensioning and tolerancing per ANSI Y14.5M-1982.
3. Symbols are defined in the “MO Series Symbol List” in Section 2.2 of Publication No. 95.
4. Dimensions A, A1 and L are measured with the package seated in JEDEC seating plane gauge GS-3.
5. D, D1, and E1 dimensions do not include mold flash or protrusions. Mold flash or protrusions shall not exceed 0.010 inch (0.25mm).
6. E and e_A are measured with the leads constrained to be perpendicular to datum -C-.
7. e_B and e_C are measured at the lead tips with the leads unconstrained. e_C must be zero or greater.
8. B1 maximum dimensions do not include dambar protrusions. Dambar protrusions shall not exceed 0.010 inch (0.25mm).
9. N is the maximum number of terminal positions.
10. Corner leads (1, N, N/2 and N/2 + 1) for E8.3, E16.3, E18.3, E28.3, E42.6 will have a B1 dimension of 0.030 - 0.045 inch (0.76 - 1.14mm).

© Copyright Intersil Americas LLC 2003-2015. All Rights Reserved.
All trademarks and registered trademarks are the property of their respective owners.

For additional products, see www.intersil.com/en/products.html

Intersil products are manufactured, assembled and tested utilizing ISO9001 quality systems as noted in the quality certifications found at www.intersil.com/en/support/qualandreliability.html

Intersil products are sold by description only. Intersil may modify the circuit design and/or specifications of products at any time without notice, provided that such modification does not, in Intersil's sole judgment, affect the form, fit or function of the product. Accordingly, the reader is cautioned to verify that datasheets are current before placing orders. Information furnished by Intersil is believed to be accurate and reliable. However, no responsibility is assumed by Intersil or its subsidiaries for its use; nor for any infringements of patents or other rights of third parties which may result from its use. No license is granted by implication or otherwise under any patent or patent rights of Intersil or its subsidiaries.

For information regarding Intersil Corporation and its products, see www.intersil.com