THIS DRAWING IS UNPUBLISHED. RELEASED FOR PUBLICATION -,- .
© COPYRIGHT - By - ALL RIGHTS RESERVED.

REVISIONS

P	LTR	DESCRIPTION	DATE	DWN	APVD
	AE	REVISE PER EN-25-318612	28APR2025	LP	RL

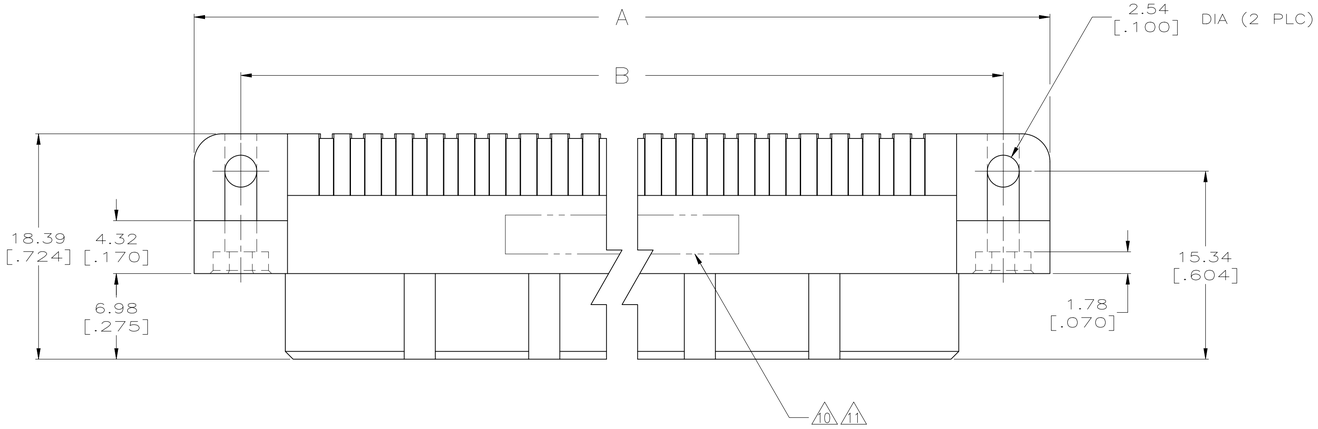

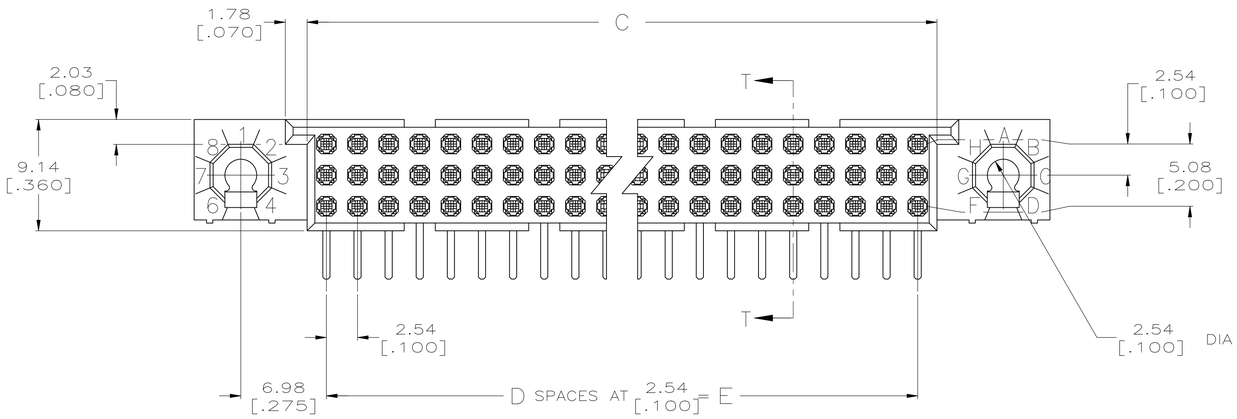

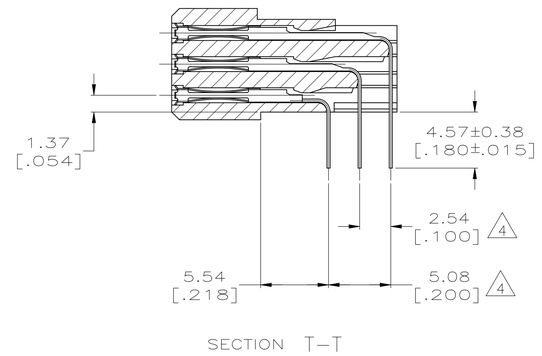

SECTION T–T

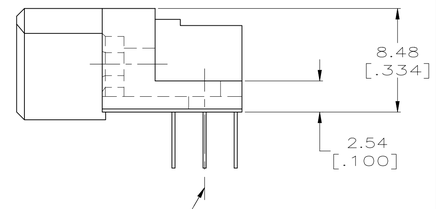

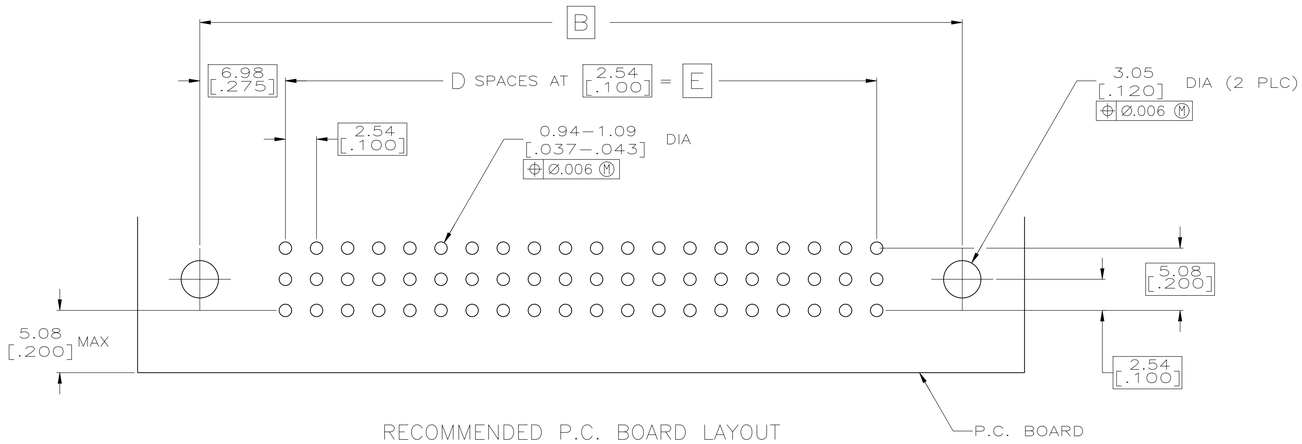

RECOMMENDED P.C. BOARD LAYOUT

THIS DRAWING IS A CONTROLLED DOCUMENT.

DIMENSIONS: mm [INCHES]

TOLERANCES UNLESS OTHERWISE SPECIFIED:
0 PLC ± –
1 PLC ± –
2 PLC ± –
3 PLC ± 0.13 [.005]
4 PLC ± –
ANGLES ± –

MATERIAL 1 2

FINISH 3 13

DWN R.K. SEIFRIED 06/13/90
CHK G.SKIPPER 01/24/92
APVD –
PRODUCT SPEC –
APPLICATION SPEC –
WEIGHT 0

TE Connectivity

NAME HDI, 3 ROW, RECEPTACLE ASSEMBLY, 4.57 [.180] LONG SOLDER TAILS –

SIZE	CAGE CODE	DRAWING NO	RESTRICTED TO
A1	00779	C-532431	–

CUSTOMER DRAWING SCALE 4:1 SHEET 1 OF 2 REV AE

4805 (1/15)

THIS DRAWING IS UNPUBLISHED. RELEASED FOR PUBLICATION -,- .
© COPYRIGHT - By - ALL RIGHTS RESERVED.

REVISIONS

P	LTR	DESCRIPTION	DATE	DWN	APVD
	-	SEE SHEET 1	-	-	-

1. HOUSING MATERIAL: THERMOPLASTIC, COLOR-NATURAL.
2. CONTACT MATERIAL: COPPER ALLOY.
3. FINISH:
   MATING AREA: MEETS THE PERFORMANCE REQUIREMENTS OF PRODUCT SPECIFICATION 108-9063; BASED ON TELCORDIA DR-1217-CORE APPLICATIONS IN UNCONTROLLED ENVIRONMENTS.
   SOLDER TAILS AREA: TIN-LEAD PLATED.
4. SOLDER TAILS MUST FIT HOLE PATTERN AS SHOWN ON THE RECOMMENDED P.C. BOARD LAYOUT.
5. DIMENSIONS IN BRACKETS ARE IN INCHES.
7. PART NUMBER IS OBSOLETE.
8. OBSOLETE PARTS: OBSOLETE CIS STREAMLINING PER D.RENAUD/D.SINISI
9. NO CONTACT LUBRICANT
10. AMP, PART NUMBER, AND DATE CODE
11. OEFD0-983-9910-308, REV-, 00779 AND DATE CODE, ONLY FOR PART NUMBER 2-532431-5
12. PART NUMBER IS FOR ROCKWELL COLLINS.
13. FINISH:
    CONTACT FINISH: .00127-.00254 [.000050-.000100] NICKEL UNDERPLATE ALL OVER; .000762 [.000030] GOLD PLATE IN CONTACT AREA, TIN-LEAD PLATED POSTS.

	E	D	C	B	A	POSN	PART NUMBER
7 13	210.82 [8.300]	83	213.97 [8.424]	224.79 [8.850]	232.41 [9.150]	252	~~4-532431-9~~
7 13	200.66 [7.900]	79	203.81 [8.024]	214.63 [8.450]	222.25 [8.750]	240	~~4-532431-3~~
7 13	175.26 [6.900]	69	178.41 [7.024]	189.23 [7.450]	196.85 [7.750]	210	~~4-532431-1~~
7 13	149.86 [5.900]	59	153.01 [6.024]	163.83 [6.450]	171.45 [6.750]	180	~~3-532431-9~~
7 13	99.06 [3.900]	39	102.21 [4.024]	113.03 [4.450]	120.65 [4.750]	120	~~3-532431-5~~
7 13	60.96 [2.400]	24	64.11 [2.524]	74.93 [2.950]	82.55 [3.250]	75	~~3-532431-1~~
13 12 11 9	60.96 [2.400]	24	64.11 [2.524]	74.93 [2.950]	82.55 [3.250]	75	2-532431-5
7 13	27.94 [1.100]	11	31.09 [1.224]	41.91 [1.650]	49.53 [1.950]	36	~~2-532431-4~~
7	48.26 [1.900]	19	51.41 [2.024]	62.23 [2.450]	69.85 [2.750]	60	~~2-532431-3~~
7 13	43.18 [1.700]	17	46.33 [1.824]	57.15 [2.250]	64.77 [2.550]	54	~~2-532431-2~~
7	144.78 [5.700]	57	147.93 [5.824]	158.75 [6.250]	166.37 [6.550]	174	~~2-532431-1~~
7	81.28 [3.200]	32	84.43 [3.324]	95.25 [3.750]	102.87 [4.050]	99	~~2-532431-0~~
	210.82 [8.300]	83	213.97 [8.424]	224.79 [8.850]	232.41 [9.150]	252	1-532431-9
7	243.84 [9.600]	96	246.99 [9.724]	257.81 [10.150]	265.43 [10.450]	291	~~1-532431-8~~
7	251.46 [9.900]	99	254.61 [10.024]	265.43 [10.450]	273.05 [10.750]	300	~~1-532431-7~~
7	238.76 [9.400]	94	241.91 [9.524]	252.73 [9.950]	260.35 [10.250]	285	~~1-532431-6~~
7	226.06 [8.900]	89	229.21 [9.024]	240.03 [9.450]	247.65 [9.750]	270	~~1-532431-5~~
7	213.36 [8.400]	84	216.51 [8.524]	227.33 [8.950]	234.95 [9.250]	255	~~1-532431-4~~
	200.66 [7.900]	79	203.81 [8.024]	214.63 [8.450]	222.25 [8.750]	240	1-532431-3
8 OBSOLETE	187.96 [7.400]	74	191.11 [7.524]	201.93 [7.950]	209.55 [8.250]	225	~~1-532431-2~~
	175.26 [6.900]	69	178.41 [7.024]	189.23 [7.450]	196.85 [7.750]	210	1-532431-1
7	162.56 [6.400]	64	165.71 [6.524]	176.53 [6.950]	184.15 [7.250]	195	~~1-532431-0~~
	149.86 [5.900]	59	153.01 [6.024]	163.83 [6.450]	171.45 [6.750]	180	532431-9
	137.16 [5.400]	54	140.31 [5.524]	151.13 [5.950]	158.75 [6.250]	165	532431-8
	124.46 [4.900]	49	127.61 [5.024]	138.43 [5.450]	146.05 [5.750]	150	532431-7
7	111.76 [4.400]	44	114.91 [4.524]	125.73 [4.950]	133.35 [5.250]	135	~~532431-6~~
	99.06 [3.900]	39	102.21 [4.024]	113.03 [4.450]	120.65 [4.750]	120	532431-5
7	86.36 [3.400]	34	89.51 [3.524]	100.33 [3.950]	107.95 [4.250]	105	~~532431-4~~
	78.74 [3.100]	31	81.89 [3.224]	92.71 [3.650]	100.33 [3.950]	96	532431-3
7	73.66 [2.900]	29	76.81 [3.024]	87.63 [3.450]	95.25 [3.750]	90	~~532431-2~~
	60.96 [2.400]	24	64.11 [2.524]	74.93 [2.950]	82.55 [3.250]	75	532431-1

THIS DRAWING IS A CONTROLLED DOCUMENT.

DIMENSIONS: mm [INCHES]

TOLERANCES UNLESS OTHERWISE SPECIFIED:
0 PLC ± -
1 PLC ± -
2 PLC ± -
3 PLC ± 0.13 [.005]
4 PLC ± -
ANGLES ± -

MATERIAL 1 2
FINISH 3 13

DWN 06/13/90 R.K. SEIFRIED
CHK 01/24/92 G.SKIPPER
APVD -
PRODUCT SPEC -
APPLICATION SPEC -
WEIGHT -

TE Connectivity

NAME: HDI, 3 ROW, RECEPTACLE ASSEMBLY, 4.57 [.180] LONG SOLDER TAILS

SIZE A1 | CAGE CODE 00779 | DRAWING NO C-532431 | RESTRICTED TO -

CUSTOMER DRAWING | SCALE 4:1 | SHEET 2 OF 2 | REV AE

4805 (1/15)