Panasonic
INDUSTRY

Safety Relays

SF-M RELAYS

Product Catalog

IN Your Future

2025.2

SF-M RELAYS

Flat type safety relays (1 Form A 1 Form B)

Protective construction: Flux-resistant (RT II), Sealed (RTIII)

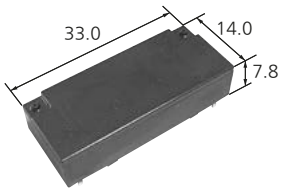

(Unit: mm)

FEATURES

- Small size: 14 mm (W) × 33 mm (L) × 7.8 mm (H)
- Forcibly guided contact structure: Compliant with: IEC61810-3 (EN50205)
- Low operating power: 270 mW (Holding Power: 100 mW)
- Reflow mountable (RTII)
- RTIII type is also available

TYPICAL APPLICATIONS

- Safety relay unit and PLC
- Robot
- Machine Tools

ORDERING INFORMATION

ASFM 0 ☐ ☐ ☐

- Contact type
  0: 1 Form A 1 Form B
- Rated voltage (DC)

Part No.	03	05	12	16	18	21	24
Rated voltage (V)	3	5	12	16	18	21	24

- Structure (Protection/ Soldering)
  2: PC board terminal type, Flux-resistant (RT II), AgNi contact, Reflow mountable
  5: PC board terminal type, Sealed (RTIII), $AgSnO_2$ contact
- Packaging presentation
  S: Stick packaging
  X: Tape packaging*1

*1: RT II type is applicable for reflow soldering.
Note) The "S" and "X" at the end of the part number (packaging presentation) only appears on the inner and outer packaging. It does not appear on the relay itself.

TYPES

Contact arrangement		Rated coil voltage	Part No.		Standard packing	
			Flux-resistant (RT II)	Sealed (RT III)	Carton	Case
2 poles	1 Form A 1 Form B	3 V DC	ASFM0032S (X) *1	ASFM0035S	Stick packaging 20 pcs. / 1 stick Tape packaging *1 250 pcs. /1 reel	500 pcs.
		5 V DC	ASFM0052S (X) *1	ASFM0055S		
		12 V DC	ASFM0122S (X) *1	ASFM0125S		
		16 V DC	ASFM0162S (X) *1	ASFM0165S		
		18 V DC	ASFM0182S (X) *1	ASFM0185S		
		21 V DC	ASFM0212S (X) *1	ASFM0215S		
		24 V DC	ASFM0242S (X) *1	ASFM0245S		

*1: Tape packaging can be selected only by the " X " at the end of the part number.

©Panasonic Industry Co., Ltd. 2025

RATING

■ Coil data

- Operating characteristics such as " Operate voltage " and " Release voltage " are influenced by mounting conditions, ambient temperature, etc.
  Therefore, please use the relay within ±5 % of rated coil voltage.
- "Initial" means the condition of products at the time of delivery.

Contact arrangement		Rated coil voltage	Operate voltage*1 (at 20 ℃)	Release voltage*1 (at 20 ℃)	Rated operating current (±10 % at 20 ℃)	Coil resistance (±10 % at 20 ℃)	Rated operating power	Max. allowable voltage*2 (at 20 ℃)
2 poles	1 Form A 1 Form B	3 V DC	Max. 75 % of rated voltage (initial)	Min. 10 % of rated voltage (initial)	90 mA	33.3 Ω	270 mW (When input) 100 mW (When retained)	120 % V of rated voltage
		5 V DC			54 mA	92.6 Ω		
		12 V DC			23 mA	533 Ω		
		16 V DC			17 mA	948 Ω		
		18 V DC			15 mA	1,200 Ω		
		21 V DC			13 mA	1,633 Ω		
		24 V DC			11 mA	2,133 Ω		

*1: Square, pulse drive
*2: It is not allowed to apply the continuous maximum voltage to the coil.
In order to obtain the specified performance, please apply the rated voltage.

■ Specifications

Characteristics	Item	Specifications
Contact	Coil arrangement	1 Form A 1 Form B
	Contact resistance (Initial)	Max. 100 mΩ (By voltage drop 6 V DC 1 A)
	Contact material	RT II : Au flashed AgNi type RTIII : Au flashed $AgSnO_2$ type
	Contact rating (resistive)	N.O. contact (5-6 terminal) : 6 A 250 V AC, 6 A 30 V DC N.C. contact (3-4 terminal) : 4 A 250 V AC, 4 A 30 V DC
	Max. switching power (resistive)	N.O. contact (5-6 terminal) : 1,500 VA, 180 W (85 W : when load voltage exceeds 30 V DC) N.C. contact (3-4 terminal) : 1,000 VA, 120 W (85 W : when load voltage exceeds 30 V DC)
	Max. switching voltage	250 V AC, 125 V DC
	Max. switching current	N.O. contact (5-6 terminal) : 6 A AC, 6 A DC N.C. contact (3-4 terminal) : 4 A AC, 4 A DC
	Min. switching load (reference value) *1	1 mA 10 V DC
insulation resistance (initial)		Min. 1,000 MΩ at 500 V DC (Measured portion is the same as the case of dielectric strength.)
Dielectric strength (initial)	Between open contacts	1,500 Vrms for 1 min (Detection current: 10 mA)
	Between contact and coil	N.O. contact (5-6 terminal) — coil: 4,000 Vrms for 1 min N.C. contact (3-4 terminal) — coil: 2,500 Vrms for 1 min
Coil hold voltage *2		60 % of rated voltage (—40 ℃ to 85 ℃)
Time characteristics (initial)	Operate time	Max. 15 ms (at rated voltage, at 20 ℃, without bounce)
	Release time *3	Max. 10 ms (at rated voltage, at 20 ℃, without bounce, without diode)
Shock resistance	Functional	200 m/s^2 (half-sine shock pulse: 11 ms, detection time: 10 μs)
	Destructive	1,000 m/s^2 (half-sine shock pulse: 6 ms)
Vibration resistance	Functional	10 Hz to 55 Hz (at double amplitude of 2.5 mm, detection time: 10μs)
	Destructive	10 Hz to 55 Hz (at double amplitude of 3.5 mm)
Expected life	Mechanical life	Min. 10×10^6 ope. (at 180 times/min)
Conditions	Conditions for usage, transport and storage *4	Ambient temperature: —40 ℃ to 85 ℃ Humidity: 5 % RH to 85 % RH (Avoid icing and condensation)
Unit weight		Approx. 6.5 g

*1: This value can change due to the switching frequency, environmental conditions, and desired reliability level, therefore it is recommended to check this with the actual load.
*2: Coil holding voltage is the coil voltage after 100 ms from the application of rated coil voltage.
*3: If a diode is connected across the coil in parallel, the release time will be delayed. Check this under actual operating conditions.
*4: For ambient temperature, please read "GUIDELINES FOR RELAY USAGE".

■ Expected electrical life

Condition: Resistive load, at 6 times/min (ON: OFF = 1 s: 9 s)

Type		Switching capacity	Number of operations
RT II , RTIII	N.O. contact (5-6 terminal)	6 A 250 V AC	100×10^3 ope.
		6 A 30 V DC	100×10^3 ope.
	N.C. contact (3-4 terminal)	4 A 250 V AC	100×10^3 ope.
		4 A 30 V DC	100×10^3 ope.

©Panasonic Industry Co., Ltd. 2025

REFERENCE DATA

1. Maximum switching capacity

AC resistive load, DC resistive load

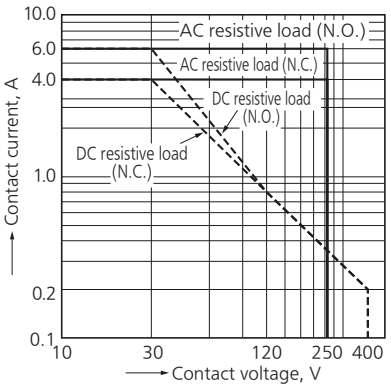

2. Operate/response/release time

Tested sample: ASFM0****
n = 100 pcs
Ambient temperature: 25℃
Coill applied voltage: 100% V, Without Diode

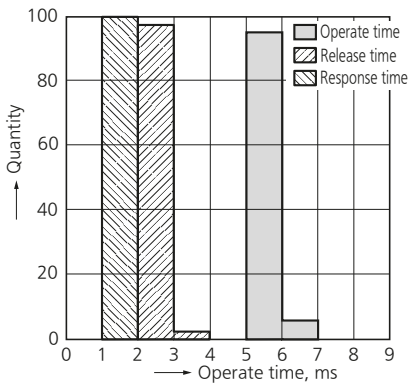

3. Operating time for coil applied voltage

Tested sample: ASFM0****
n = 6 pcs
Ambient temperature: 25℃
Without Diode

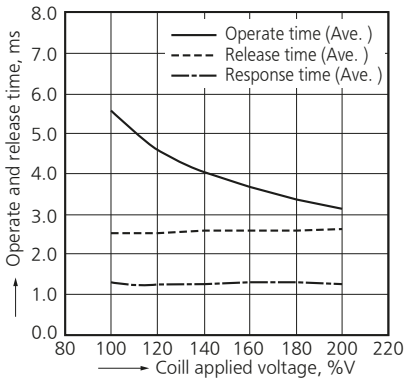

4. Functional shock resistance

Tested sample: ASFM0****
n = 6 pcs
Ambient temperature: 25℃
Impact is applied three times in each direction (6 directions) , and contact deviation and contact check are confirmed.
Coil applied voltage: Energized (100%V, 60%V), De-energized
Standard value: 200 m/s² (Value of applied shock: 200 m/s² ～ 1000 m/s²)

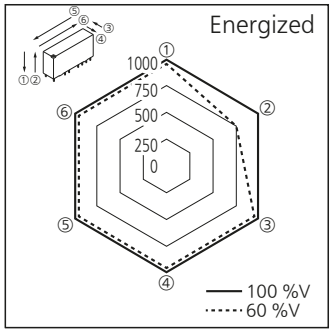

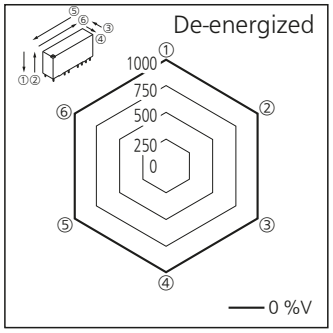

5. Ambient temperature characteristics

Tested sample: ASFM0****
n = 6 pcs
Ambient temperature: −40℃ ⇔ 105℃
Coill applied voltage: 100% V

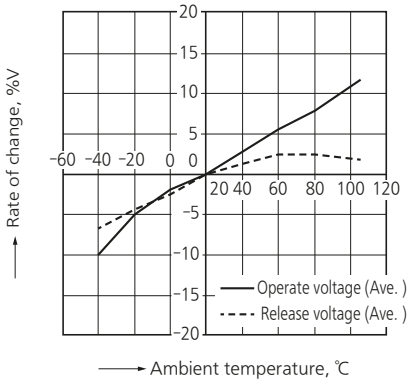

©Panasonic Industry Co., Ltd. 2025

DIMENSIONS (Unit: mm)

CAD The CAD data of the products with a " CAD " mark can be downloaded from our Website.

● RTII

CAD



External dimensions

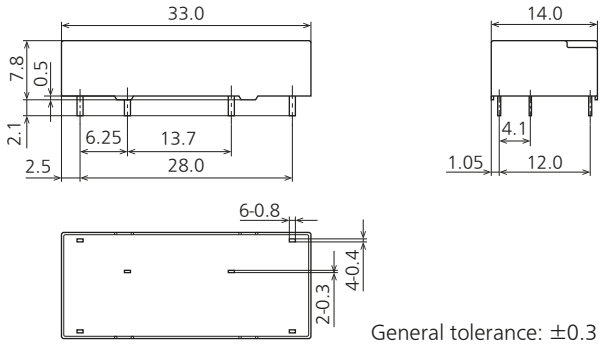

General tolerance: ±0.3

Recommended
PC board pattern
(BOTTOM VIEW)

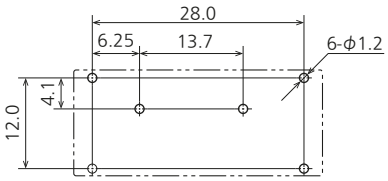

General tolerance: ±0.1

Schematic
(BOTTOM VIEW)

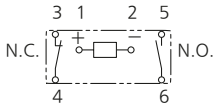

(De-energized condition)

● RTIII

CAD



External dimensions

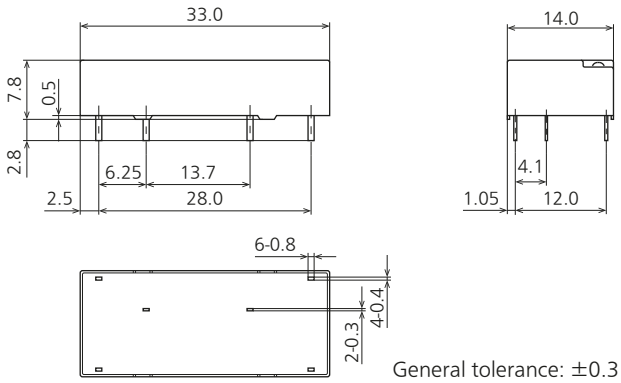

General tolerance: ±0.3

Recommended
PC board pattern
(BOTTOM VIEW)

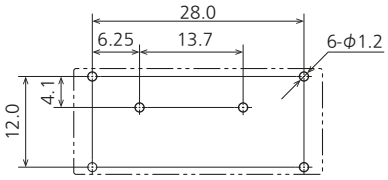

General tolerance: ±0.1

Schematic
(BOTTOM VIEW)

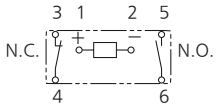

(De-energized condition)

©Panasonic Industry Co., Ltd. 2025

SAFETY STANDARDS

Each standard may be updated at any time, so please check our Website for the latest information.

■ UL/C-UL (Approved)

File No.	Contact	Contact rating	Operations	Ambient temperature
E43149	N.O.	6 A 250 V AC Resistive	100 X 10^3	40 ℃
		6 A 30 V DC Resistive	100 X 10^3	40 ℃
		6 A 250 V AC General use	6 X 10^3	85 ℃
		6 A 30 V DC General use	6 X 10^3	85 ℃
		B300, R300 Pilot duty	6 X 10^3	85 ℃
	N.C.	4 A 250 V AC Resistive	100 X 10^3	40 ℃
		4 A 30 V DC Resistive	100 X 10^3	40 ℃
		4 A 250 V AC General use	6 X 10^3	85 ℃
		4 A 30 V DC General use	6 X 10^3	85 ℃
		B300, R300 Pilot duty	6 X 10^3	85 ℃

■ TÜV (Approved)

File No.	Contact	Contact rating	Operations	Ambient temperature
B013461 0704 Rev.04	N.O.	6 A 250 V AC Resistive	100 X 10^3	40 ℃
		6 A 30 V DC Resistive	100 X 10^3	40 ℃
		6 A 250 V AC General use	6 X 10^3	85 ℃
		6 A 30 V DC General use	6 X 10^3	85 ℃
		AC 15: 3 A 250 V AC	6,050	85 ℃
		DC 13: 2 A 24 V DC	6,050	85 ℃
	N.C.	4 A 250 V AC Resistive	100 X 10^3	40 ℃
		4 A 30 V DC Resistive	100 X 10^3	40 ℃
		4 A 250 V AC General use	6 X 10^3	85 ℃
		4 A 30 V DC General use	6 X 10^3	85 ℃
		AC15: 2 A 250 V AC	6,050	85 ℃
		DC13: 2 A 24 V DC	6,050	85 ℃

■ CSA (Approved)

CSA standard approved by C-UL

INSULATION CHARACTERISTIC (IEC61810-1)

Item		Characteristics
Clearance/Creepage distance (IEC61810-1)	(Between N.O. contact and coil)	5.5/5.5
	(Between N.C. contact and coil)	3.0/3.0
Category of protection (IEC61810-1)		RT II , RTIII
Tracking resistance (IEC60112)		PTI 175
Insulation material group		IIIa
Over voltage category		III
Rated voltage		250 V
Pollution degree		2
Type of insulation	(Between N.O. contact and coil)	Reinforced insulation
	(Between N.C. contact and coil)	Basic insulation
Type of insulation (Between open contacts)		Micro disconnection

Note) Actual value.

GUIDELINES FOR USAGE

■ For cautions for use, please read " GUIDELINES FOR RELAY USAGE " .

https://industry.panasonic.com/global/en/products/control/relay/cautions_use

● Contact gaps when a pair of contacts are welded.

The table below shows the state of the other contacts.
If N.O. contact is welded, 0 V is applied to the coil.
If N.C. contact is welded, the rated voltage is applied.

		Other contacts state	
		N.C. contact (3-4 terminal)	N.O. contact (5-6 terminal)
Welded contact terminal No.	N.C. contact (3-4 terminal)	–	>0.5
	N.O. contact (5-6 terminal)	>0.5	–

>0.5: contact gap is kept at min. 0.5 mm
Note) Contact gaps are shown at the initial state.
If the material transfer of the contacts occurs, it is necessary to check the actual loading.

● SOLDERING (RT II)

In case of automatic soldering, following conditions should be observed.
[Condition of I.R.S (recommended)]
recommended condition :
reflow; 1 time, measurement area ; PCB surface where the relay is soldered

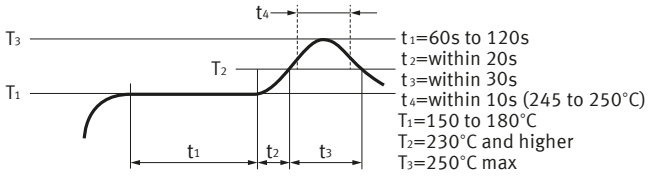

Caution
Even if used in the recommended condition, the relay may be affected by heat stress caused by a busy layout, reflow heating process, PC board type(metal etc.) , and so on. Therefore, please check the quality and reliability under the actual worst condition.

©Panasonic Industry Co., Ltd. 2025

■ For cautions for use, please read " GUIDELINES FOR RELAY USAGE ".
https://industry.panasonic.com/global/en/products/control/relay/cautions_use

Precautions for Coil Input

■ Long term current carrying

A circuit that will be carrying a current continuously for long periods without relay switching operation. (circuits for emergency lamps, alarm devices and error inspection that, for example, revert only during malfunction and output warnings with form B contacts) Continuous, long-term current to the coil will facilitate deterioration of coil insulation and characteristics due to heating of the coil itself. For circuits such as these, please use a magnetic-hold type latching relay. If you need to use a single stable relay, use a sealed type relay that is not easily affected by ambient conditions and make a failsafe circuit design that considers the possibility of contact failure or disconnection.

■ DC Coil operating power

Steady state DC current should be applied to the coil. The wave form should be rectangular. If it includes ripple, the ripple factor should be less than 5 %.
However, please check with the actual circuit since the electrical characteristics may vary. The rated coil voltage should be applied to the coil and the set/reset pulse time of latching type relay differs for each relays, please refer to the relay's individual specifications.

■ Coil connection

When connecting coils of polarized relays, please check coil polarity (＋, －) at the internal connection diagram (Schematic). If any wrong connection is made, it may cause unexpected malfunction, like abnormal heat, fire and so on, and circuit do not work. Avoid impressing voltages to the set coil and reset coil at the same time.

■ Maximum allowable voltage and temperature rise

Proper usage requires that the rated coil voltage be impressed on the coil. Note, however, that if a voltage greater than or equal to the maximum continuous voltage is impressed on the coil, the coil may burn or its layers short due to the temperature rise. Furthermore, do not exceed the usable ambient temperature range listed in the catalog.

●Operate voltage change due to coil temperature rise

In DC relays, after continuous passage of current in the coil, if the current is turned OFF, then immediately turned ON again, due to the temperature rise in the coil, the operate voltage will become somewhat higher. Also, it will be the same as using it in a higher temperature atmosphere. The resistance/temperature relationship for copper wire is about 0.4 % for 1 ℃, and with this ratio the coil resistance increases. That is, in order to operate of the relay, it is necessary that the voltage be higher than the operate voltage and the operate voltage rises in accordance with the increase in the resistance value. However, for some polarized relays, this rate of change is considerably smaller.

©Panasonic Industry Co., Ltd. 2024

Ambient Environment

■ Usage, Transport, and Storage Conditions

During usage, storage, or transportation, avoid locations subjected to direct sunlight and maintain normal temperature, humidity and pressure conditions.

●Temperature/Humidity/Pressure

When transporting or storing relays while they are tube packaged, there are cases the temperature may differ from the allowable range. In this case be sure to check the individual specifications.

Also allowable humidity level is influenced by temperature, please check charts shown below and use relays within mentioned conditions. (Allowable temperature values differ for each relays, please refer to the relay's individual specifications.)

1) Temperature:
The tolerance temperature range differs for each relays, please refer to the relay's individual specifications

2) Humidity: 5 to 85 % RH

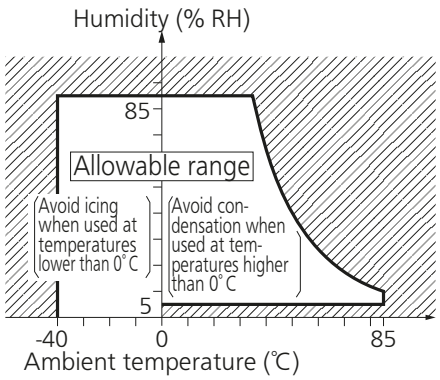

3) Pressure: 86 to 106 kPa

●Dew condensation

Condensation occurs when the ambient temperature drops suddenly from a high temperature and humidity, or the relay is suddenly transferred from a low ambient temperature to a high temperature and humidity. Condensation causes the failures like insulation deterioration, wire disconnection and rust etc. Panasonic Industry Co., Ltd. does not guarantee the failures caused by condensation.

The heat conduction by the equipment may accelerate the cooling of device itself, and the condensation may occur.

Please conduct product evaluations in the worst condition of the actual usage. (Special attention should be paid when high temperature heating parts are close to the device. Also please consider the condensation may occur inside of the device.)

●Icing

Condensation or other moisture may freeze on relays when the temperature become lower than 0 ℃.This icing causes the sticking of movable portion, the operation delay and the contact conduction failure etc. Panasonic Industry Co., Ltd. does not guarantee the failures caused by the icing.

The heat conduction by the equipment may accelerate the cooling of relay itself and the icing may occur. Please conduct product evaluations in the worst condition of the actual usage.

●Low temperature and low humidity

The plastic becomes brittle if the relay is exposed to a low temperature, low humidity environment for long periods of time.

●High temperature and high humidity

Storage for extended periods of time (including transportation periods) at high temperature or high humidity levels or in atmospheres with organic gases or sulfide gases may cause a sulfide film or oxide film to form on the surfaces of the contacts and/or it may interfere with the functions. Check out the atmosphere in which the units are to be stored and transported.

●Package

In terms of the packing format used, make every effort to keep the effects of moisture, organic gases and sulfide gases to the absolute minimum.

●Silicon

When a source of silicone substances (silicone rubber, silicone oil, silicone coating materials and silicone filling materials etc.) is used around the relay, the silicone gas (low molecular siloxane etc.) may be produced.

This silicone gas may penetrate into the inside of the relay. When the relay is kept and used in this condition, silicone compound may adhere to the relay contacts which may cause the contact failure. Do not use any sources of silicone gas around the relay (Including plastic sealed types).

●NOx Generation

When relay is used in an atmosphere high in humidity to switch a load which easily produces an arc, the NOx created by the arc and the water absorbed from outside the relay combine to produce nitric acid.

This corrodes the internal metal parts and adversely affects operation.

Avoid use at an ambient humidity of 85 % RH or higher (at 20 ℃). If use at high humidity is unavoidable, please contact our sales representative.

©Panasonic Industry Co., Ltd. 2024

Others

■ Cleaning

- Although the environmentally sealed type relay (plastic sealed type, etc.) can be cleaned, avoid immersing the relay into cold liquid (such as cleaning solvent) immediately after soldering. Doing so may deteriorate the sealing performance.
- Cleaning with the boiling method is recommended (The temperature of cleaning liquid should be 40 ℃ or lower). Avoid ultrasonic cleaning on relays. Use of ultrasonic cleaning may cause breaks in the coil or slight sticking of the contacts due to ultrasonic energy.

Please refer to **" the latest product specifications "** when designing your product.
• Requests to customers:
https://industry.panasonic.com/global/en/salespolicies

©Panasonic Industry Co., Ltd. 2024

■ Global Sales Network Information: industry.panasonic.com/global/en/salesnetwork/globalnetwork

Panasonic
INDUSTRY

Panasonic Industry Co., Ltd.
Electromechanical Control Business Division
■1006, Oaza Kadoma, Kadoma-shi, Osaka 571-8506, Japan
industry.panasonic.com

©Panasonic Industry Co., Ltd. 2025

Specifications are subject to change without notice.
ASCTB434E 202502
2025.2