THIS DRAWING IS UNPUBLISHED. RELEASED FOR PUBLICATION 20
© COPYRIGHT 20 BY - ALL RIGHTS RESERVED.

LOC	DIST
CM	00

REVISIONS

P	LTR	DESCRIPTION	DATE	DWN	APVD
	P2	REVISED PER ECR-18-004355	18JUN2018	BDA	SG
	R	REVISED PER ECR-19-015071	18OCT2019	BDA	SW

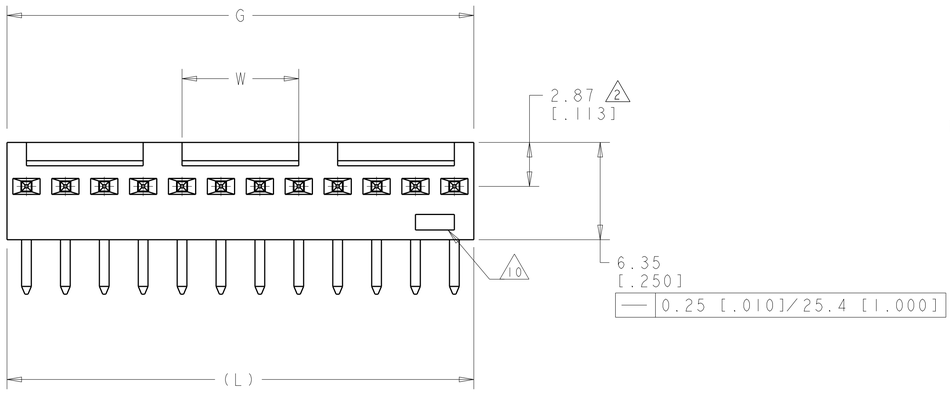

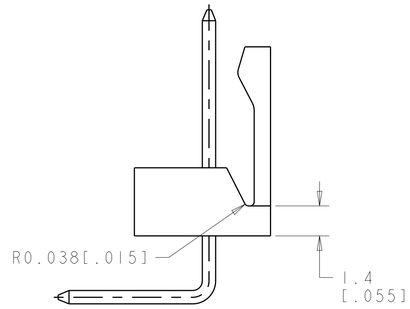

TYPICAL END VIEW
FOR 4 THROUGH 7 POSITION

1. POST WITHSTAND 13 NEWTONS (3 LBS) MIN AXIAL FORCE IN DIRECTION SHOWN WITHOUT DISLODGING.
2. MEASURED AT -A-.
3. PARTS COMPLY WITH SOLDERABILITY SPEC 109-11-2.
4. MATERIAL: HOUSING: NYLON, 4/6, HIGH TEMP, BLACK.
   POST-2 THRU -12 : COPPER ALLOY TIN LEAD (93/7) PLATING.
   POST -32 THRU -42 : COPPER ALLOY TIN PLATE)
5. COORDINATE DIMENSION APPLIES FROM CENTER OF ACTUAL FEATURE.
6. POSTS TO BE MEASURED WHEN STRIP HELD FLAT.
7. DIMENSIONS IN BRACKETS ARE IN INCHES.
8. TOLERANCES APPLY TO SOLDER SIDE OF BOARD.
9. ONE HOLE MAY BE UNDERSIZED 0.81-0.89 [.032-.035] DIAMETER FOR ASSEMBLY RETENTION DURING PROCESSING.
10. TE LOGO,UL,AND CSA TRADEMARKS TO APPEAR ON THIS SURFACE.
11. OBSOLETE PARTS: OBSOLETE CIS STREAMLINING PER D.RENAUD/D.SINISI

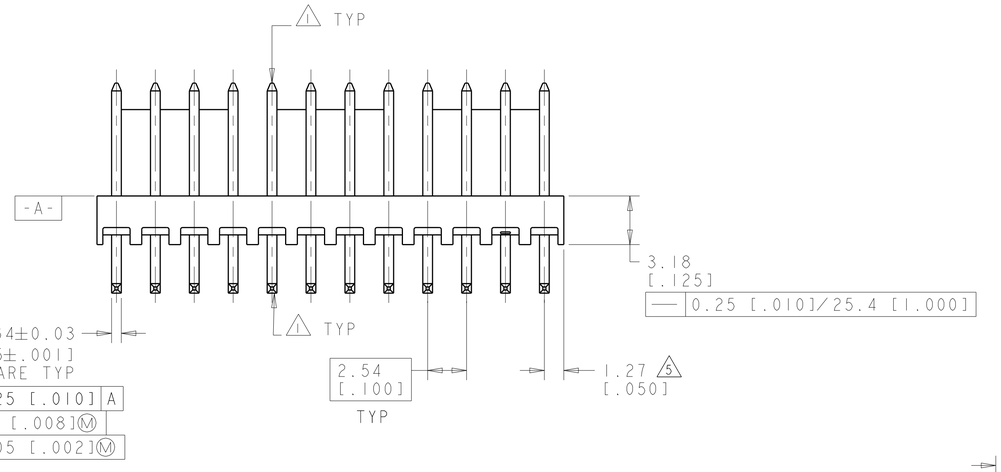

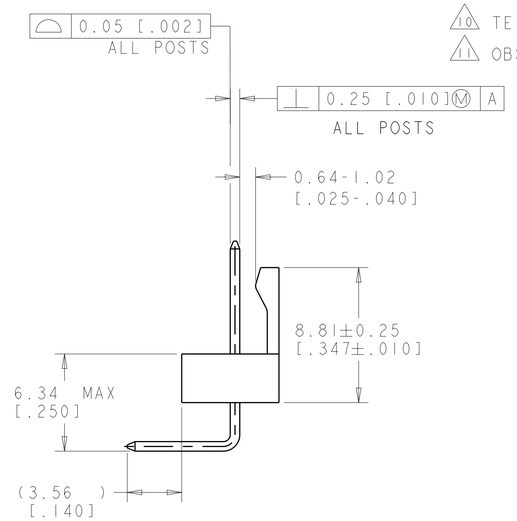

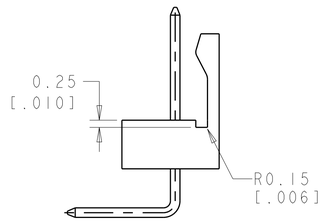

TYPICAL END VIEW
FOR 2 POSITION ONLY

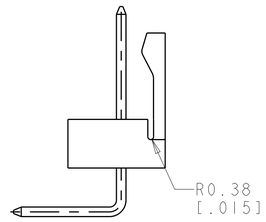

TYPICAL END VIEW
FOR 3 POSITION ONLY

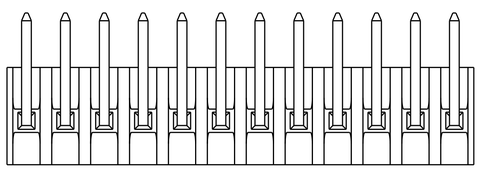

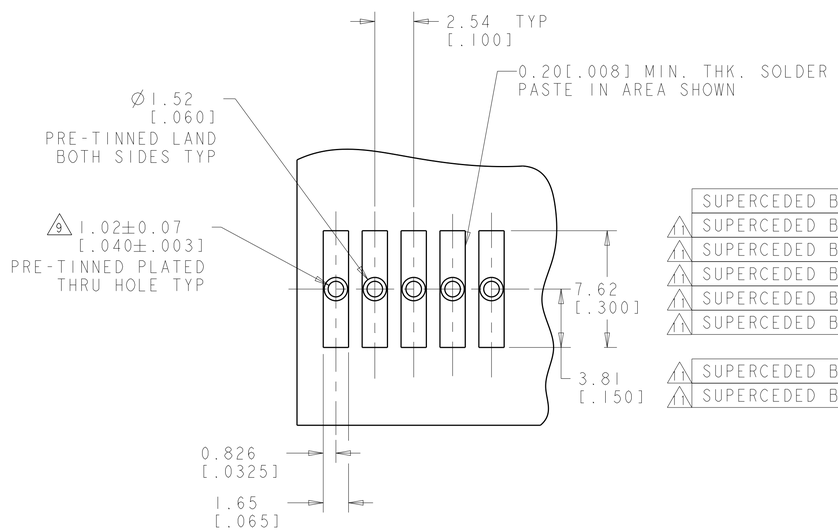

RECOMMENDED MOUNTING HOLE PATTERN 8
FOR 1.57±0.20[.062±.008] THICK P.C. BOARD

	W	G	L	NO OF POSN	PART NO
	7.62 [.300]	12.70 [.500]	30.48 [1.200]	12	4-647051-2
	-	10.16 [.400]	27.94 [1.100]	11	4-647051-1
	-	7.62 [.300]	25.40 [1.000]	10	4-647051-0
	-	5.08 [.200]	22.86 [.900]	9	3-647051-9
	-	2.54 [.100]	20.32 [.800]	8	3-647051-8
	-	-	17.78 [.700]	7	3-647051-7
	-	-	15.24 [.600]	6	3-647051-6
	-	-	12.70 [.500]	5	3-647051-5
	-	-	10.16 [.400]	4	3-647051-4
	-	-	7.62 [.300]	3	3-647051-3
	-	-	5.08 [.200]	2	3-647051-2
SUPERCEDED BY 4-647050-2	7.62 [.300]	12.70 [.500]	30.48 [1.200]	12	1-647051-2
11 SUPERCEDED BY 4-647050-1	-	10.16 [.400]	27.94 [1.100]	11	1-647051-1
11 SUPERCEDED BY 4-647050-0	-	7.62 [.300]	25.40 [1.000]	10	1-647051-0
11 SUPERCEDED BY 3-647051-9	-	5.08 [.200]	22.86 [.900]	9	647051-9
11 SUPERCEDED BY 3-647051-8	-	2.54 [.100]	20.32 [.800]	8	647051-8
11 SUPERCEDED BY 3-647051-7	-	-	17.78 [.700]	7	647051-7
OBSOLETE	-	-	15.24 [.600]	6	647051-6
11 SUPERCEDED BY 3-647051-5	-	-	12.70 [.500]	5	647051-5
11 SUPERCEDED BY 3-647051-4	-	-	10.16 [.400]	4	647051-4
OBSOLETE	-	-	7.62 [.300]	3	647051-3
OBSOLETE	-	-	5.08 [.200]	2	647051-2

THIS DRAWING IS A CONTROLLED DOCUMENT.

DIMENSIONS: mm[INCHES]

TOLERANCES UNLESS OTHERWISE SPECIFIED:
0 PLC ±-
1 PLC ±-
2 PLC ±0.38[.015]
3 PLC ±-
4 PLC ±-
ANGLES ±0°30'

MATERIAL - 4
FINISH - 4

DWN 13-NOV-2001 K. WHITAKER
CHK 13-NOV-2001 D. ROSSI
APVD 13-NOV-2001 D. ROSSI
PRODUCT SPEC -
APPLICATION SPEC -
WEIGHT -

TE Connectivity

NAME
MTA-100 HEADER ASSY,HIGH TEMPERATURE FRICTION LOCK,.025 SQUARE, RIGHT ANGLE POST,TIN OR TIN-LEAD PLATED

SIZE A1 | CAGE CODE 00779 | DRAWING NO C-647051 | RESTRICTED TO

CUSTOMER DRAWING | SCALE 7:1 | SHEET 1 OF 1 | REV R