NOTES:

1. FOR WAVESOLDERING (SOLDER BATH TEMERATURE 265°C FOR 8 SEC. AND SOLDER PREHEAT 150°C FOR 180 SEC.)
2. IP RATING: IP 67
3. SEALED TO WITHSTAND PRESSURE UP TO 1,45 PSI FOR 30 MINUTES AFTER HIGH TEMPERATURE EXPOSURE
4. METALSHELL: ZINC DIE CAST; min. 50µin NICKEL PLATING over COPPER
5. INSULATORS: PBT GF UL 94 V-0, BLACK
6. O-RING: SILICONE PER ASTM D2000 70 SHORE A
7. SEALING COMPOUND: EPOXY RESIN UL 94 V-0; BLACK
8. CONTACTS: COPPER ALLOY
   PLATING (SEE PART NO):
   - ☐ PLEASE ADD 1 for 30µin HARD GOLD over min. 50µin NICKEL
   - ☐ PLEASE ADD 3 for 8µin HARD GOLD over min. 50µin NICKEL
9. METAL BRACKETS: ZINC DIE CAST; 300µin COPPER/40-120µin NICKEL/120-200µin TIN
10. WASHERS: COPPER ALLOY; 80µin NICKEL
11. HEXLOCKING SCREWS: STAINLESS STEEL
12. FIXING-PLATE: PBT GF UL 94 V-0; BLACK
13. PCB-SNAPS: COPPER ALLOY; min. 200µin TIN over 80µin NICKEL
    PCB-HOLE: Ø3.1± 0.1; PCB THICKNESS 1.6mm
14. P.C.B. HOLE DRILLINGS and RECOMMENDED PANEL CUT-OUT ON SHEET 2
15. RECOMMENDED TORQUE FOR MOUNTING SCREW 35Ncm (3.1 in.LB) / max.67Ncm (6 in.LB)
16. CONNECTOR IS PART MARKED: 15-00224☐ CONEC ABC

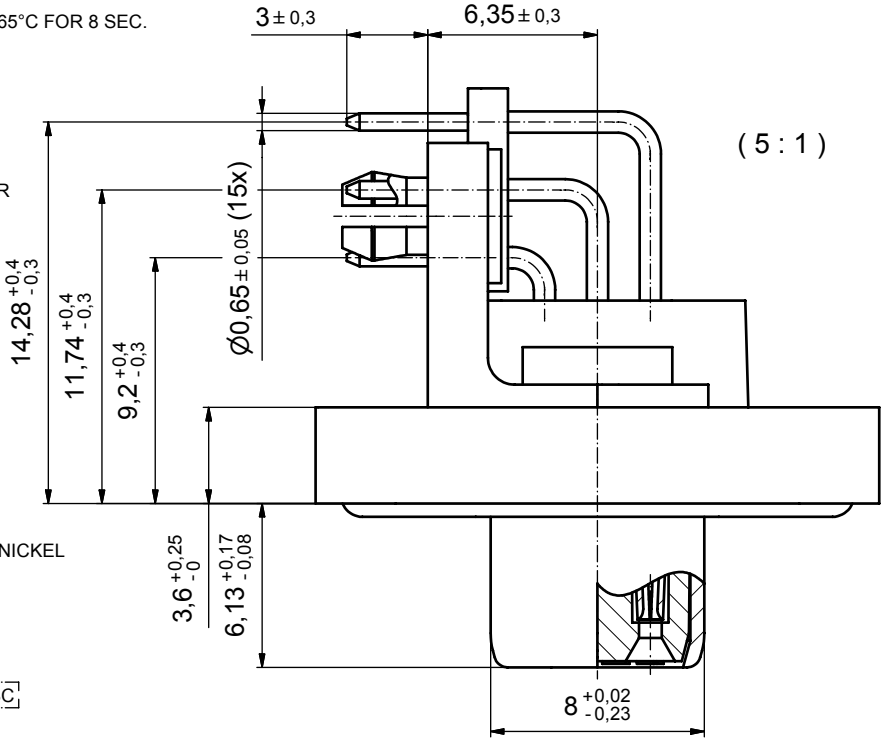

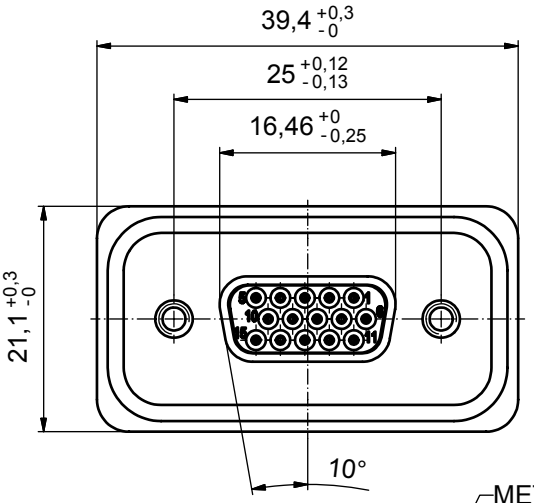

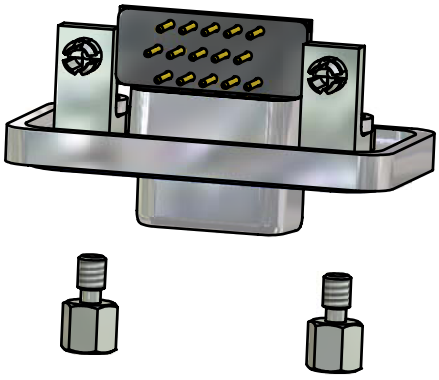

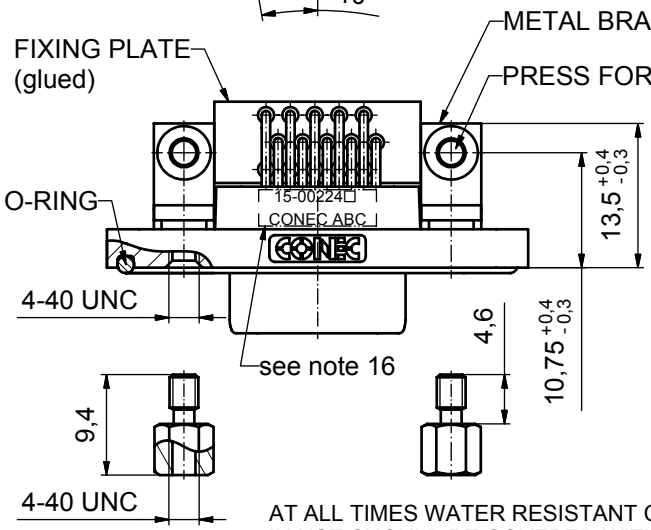

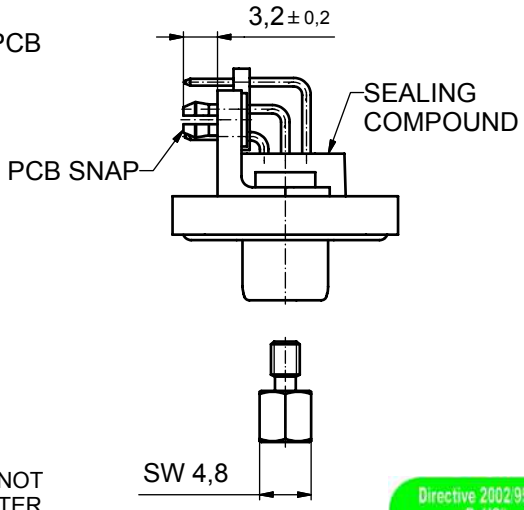

AT ALL TIMES WATER RESISTANT CONNECTORS NOT IN USE SHOULD BE COVERED WITH A CONEC WATER RESISTANT CAP OR WATER TIGHT HOOD.

Directive 2002/95/EC „RoHS" Compliant

APPROVAL # FREIGABE # DEBLOCAGE # AUTORIZACION # APPROVAL

CUSTOMER APPROVAL DATE:

NAME: TITLE:

COMPANY NAME:

THIS DRAWING MAY NOT BE COPIED OR REPRODUCED IN ANY WAY, AND MAY NOT BE PASSED ON TO A THIRD PARTY WITHOUT WRITTEN PERMISSION. OWNERSHIP AND COPYRIGHT OF CONEC GmbH

DO NOT ALTER CAD DRAWING BY HAND

rev.	description	date	name
a	Origin		

tolerance: dim. in mm

	date	name
drawn	23.11.09	Schmidt
appd.	27.11.09	Fischer
norm		
d-old		

scale: 2:1 (5:1)

material: see notes

title:

D-SUB HD FEMALE 90°

15pos. SOLDER PIN ANGLED

metal bracket, fixing plate, hexlocking screw, snap

dwg no: 15K1A500 | Inventor 10 | DIN-A3 | sh: 1

part no: 15-00224☐ (see note 8)

P.C.B. HOLE DRILLINGS
(P.C.B. TOP SIDE)

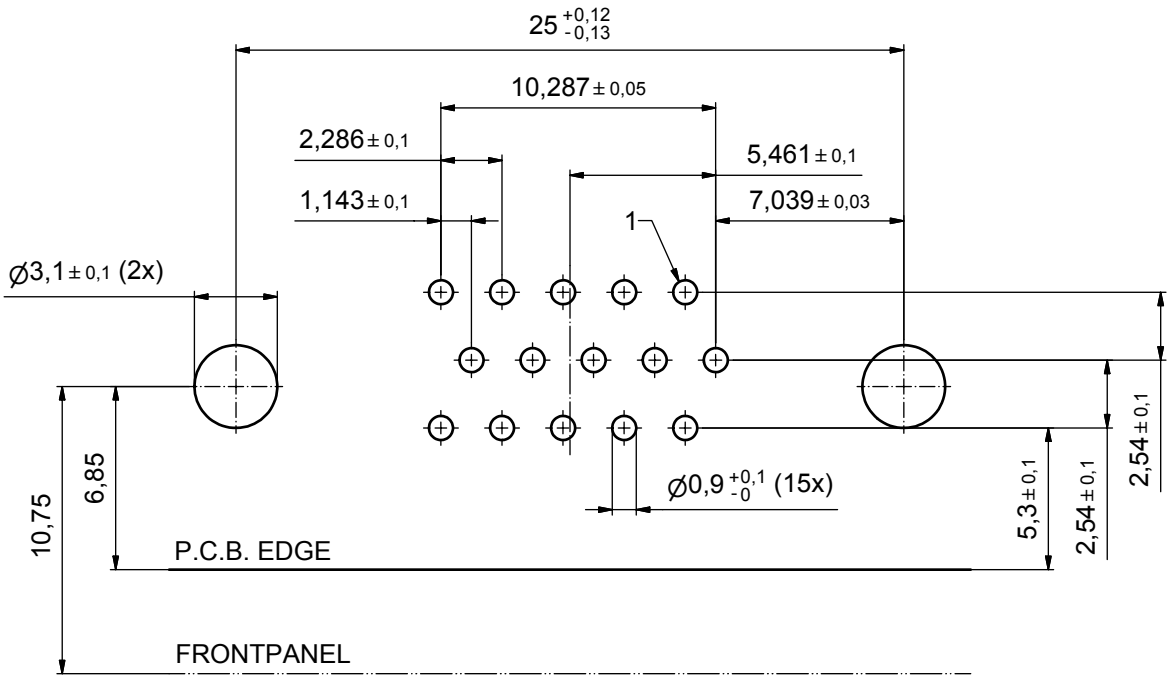

RECOMMENDED PANEL CUT-OUT

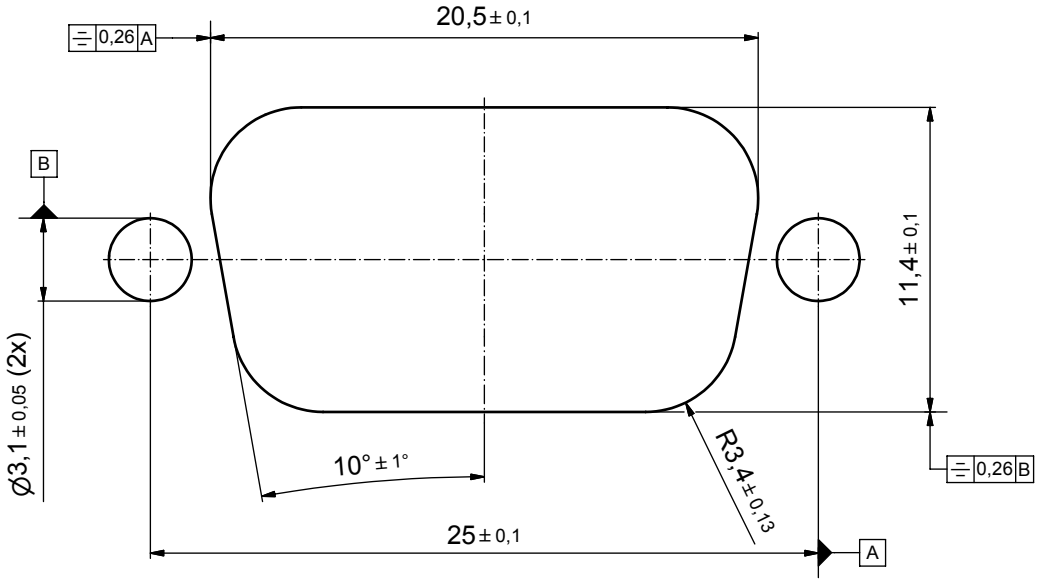

APPROVAL # FREIGABE # DEBLOCAGE # AUTORIZACION # APPROVAL

CUSTOMER APPROVAL DATE:

NAME: TITLE:

COMPANY NAME:

APPROVAL # FREIGABE # DEBLOCAGE # AUTORIZACION # APPROVAL

THIS DRAWING MAY NOT BE COPIED OR REPRODUCED IN ANY WAY, AND MAY NOT BE PASSED ON TO A THIRD PARTY WITHOUT WRITTEN PERMISSION. OWNERSHIP AND COPYRIGHT OF CONEC GmbH

DO NOT ALTER CAD DRAWING BY HAND

rev.	description	date	name
a	Origin		

tolerance

dim. in mm

	date	name
drawn	23.11.09	Schmidt
appd.	27.11.09	Fischer
norm		
d-old		

scale: 5:1

material: see sheet 1

title:

P.C.B. HOLE DRILLINGS

PANEL CUT-OUT

D-SUB Female 15pos. HD Solder pin angled 90°

dwg no: Inventor 10 | DIN-A3

15K1A500 | sh: 2

part no: see sheet 1