© – TE Connectivity. All Rights Reserved.

REVISIONS					
P	LTR	DESCRIPTION	DATE	DWN	APVD
	D5	REVISED PER ECN–22–156403	07JUN2022	RK	CSD

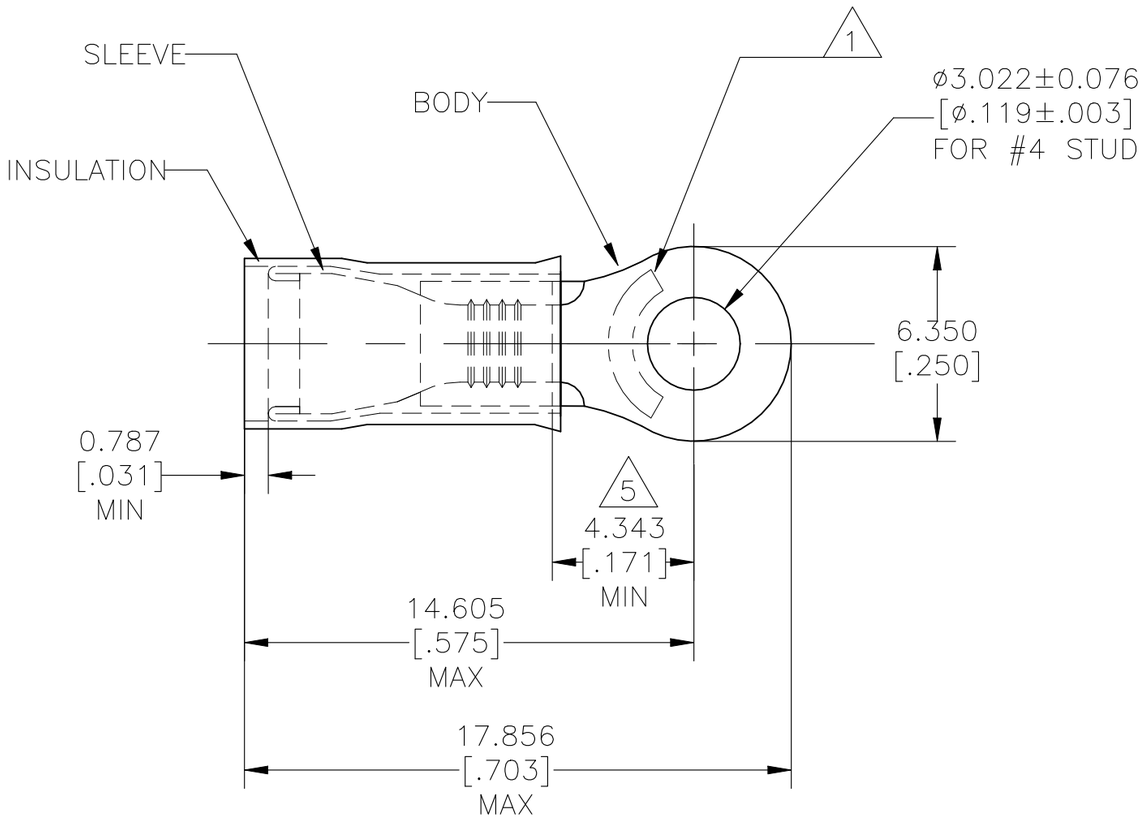

AMP WIRE RANGE	E13288 Listed	LR7189 Certified
16–14 AWG SOLID OR STRANDED	16–14 AWG SOLID OR STRANDED	16–14 AWG SOLID OR STRANDED

1. STAMP AMP 16–14* APPROX AS SHOWN.
2. WIRE INSULATION ø2.667–3.810[ø.105–.150]
3. BODY MATERIAL THK: 0.787±0.051[.031±.002]
4. MATERIAL:
   BODY & SLEEVE: CU PER ASTM B152
   INSULATION: NYLON PER ASTM D4066
5. APPLIES FROM EDGE OF METAL WIRE BARREL TO CENTER OF STUD HOLE.
6. MEETS MS25036–152, CLASS 1.
7. FINISH:
   BODY & SLEEVE: TIN PLATE 0.00254[.000100] MIN EXT THK PER ASTM B545
   INSULATION: COLOR – BLUE.

QTY	PACKAGE TYPE	PART NO
5000	TAPE & REEL	2–324159–2
1000	LOOSE PIECE	6 324159

CUSTOMER SERVICE SYSTEMS

FOR ADDITIONAL PRODUCT INFORMATION OR COPIES OF DRAWINGS AND TECHNICAL DOCUMENTS	PRODUCT INFORMATION CENTER 1–800–522–6752
FOR APPLICATION TOOLING INFORMATION	TOOLING ASSISTANCE CENTER 1–800–722–1111
FOR ORDER ENTRY	1–800–526–5142

MAX RECOMMENDED OPERATING TEMPERATURE: 105°C[221°F] MAX

VOLTAGE RATING: 300 V MAX

CIRCULAR MIL AREA: 1.04–2.62mm²[2,050–5,180] STRANDED OR SOLID

THIS DRAWING IS A CONTROLLED DOCUMENT.

DIMENSIONS: mm [INCHES]

TOLERANCES UNLESS OTHERWISE SPECIFIED:

0 PLC	± –
1 PLC	± –
2 PLC	± –
3 PLC	± 0.127[.005]
4 PLC	± –
ANGLES	± –

MATERIAL 4

FINISH 7

DWN	JR RUTH	13JAN10
CHK	T MICHIELUTTI	13JAN10
APVD	T MICHIELUTTI	13JAN10
PRODUCT SPEC	UL 486 A–B	
APPLICATION SPEC	114–2157	
WEIGHT	–	

TE Connectivity

NAME: TERMINAL, RING TONGUE, PIDG
WIRE SIZE: 16–14 AWG

SIZE	CAGE CODE	DRAWING NO	RESTRICTED TO
A3	00779	C–324159	–

CUSTOMER DRAWING | SCALE 5:1 | SHEET 1 OF 1 | REV D5