THIS DRAWING IS UNPUBLISHED. RELEASED FOR PUBLICATION 20
© COPYRIGHT 20 BY - ALL RIGHTS RESERVED.

REVISIONS

P	LTR	DESCRIPTION	DATE	DWN	APVD
	C1	REVISED PER ECR-17-017609	04DEC2017	JB	DZ
	C2	ECO-19-006934	13MAY2019	AP	WS
	C3	REVISED PER ECN-23-206968	12APR2023	WLS	VS
	C4	REVISED PER ECN-24-255994	12MAR2024	WLS	VS

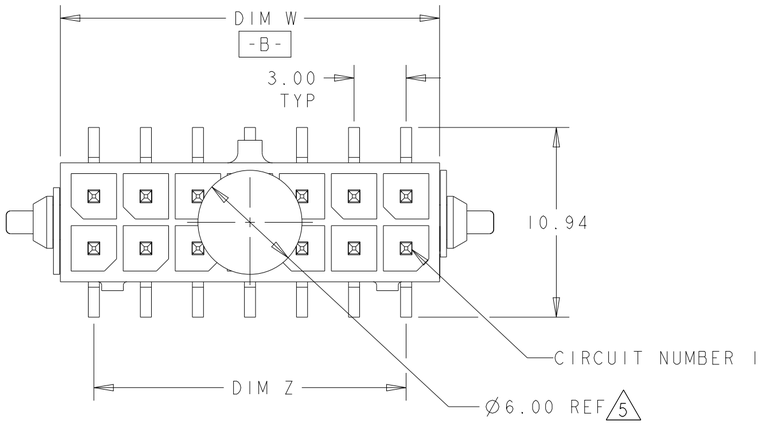

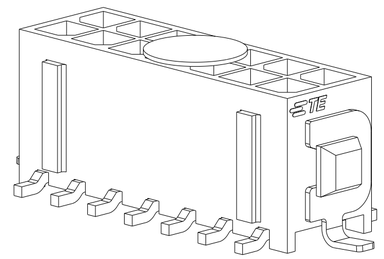

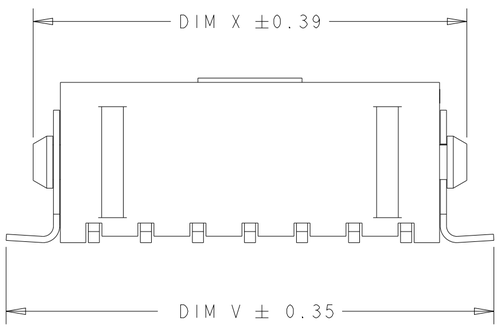

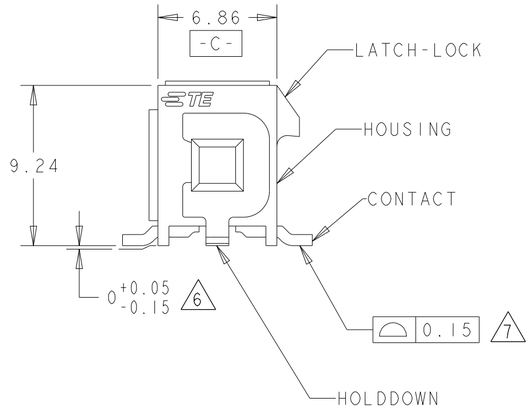

1 MATERIAL:
HOUSING - UL 94V-0 RATED HIGH TEMP NYLON, COLOR BLACK.
CONTACTS - BRASS.
HOLDDOWNS - PHOSPHOR BRONZE.

2 PLATING:
CONTACTS - 2.54µm MINIMUM MATTE TIN OVER 1.27µm MINIMUM NICKEL.
HOLDDOWNS - 2.54µm MINIMUM MATTE TIN OVER 1.27µm MINIMUM NICKEL.

3. SPECIAL PACKAGING FOR IEC 286-3 REQUIREMENT. PARTS ORIENTED TAPE 180° DIFFERENT IN TAPE THAN STANDARD PART NUMBER 794636.

4 RECOMMENDED PC BOARD THICKNESS OF 1.57.

5 KAPTON VACUUM PICK UP BUTTON.

6 DIMENSION APPLIES TO SOLDERTAIL SURFACES AND STANDOFF SURFACES.

7 ALL SOLDERTAILS AND HOLD DOWNS.

8 COUNTERPART RECOMMENDED IS PN 794617 (DASH ACC. TO NUMBER OF POSITION).

9 FOR REELING DIRECTION AND PACKAGING TYPE, SEE SPECIFICATION 114-13000.

	DIM V	DIM W	DIM Y	DIM Z	DIM X	NO. OF POSN.	ASSEMBLY
	37,04	30.86	34.27	27.00	34.00	20	2-1586842-0
	31.04	24.86	28.27	21.00	28.00	16	1-1586842-6
OBSOLETE	~~25.04~~	~~18.86~~	~~22.27~~	~~15.00~~	~~22.00~~	~~12~~	~~1-1586842-2~~
OBSOLETE	~~19.04~~	~~12.86~~	~~16.27~~	~~9.00~~	~~16.00~~	~~8~~	~~1586842-8~~
	16.04	9.86	13.27	6.00	13.00	6	1586842-6
	13.04	6.86	10.27	3.00	10.00	4	1586842-4
	10.04	3.86	7.27	-	7.00	2	1586842-2

THIS DRAWING IS A CONTROLLED DOCUMENT.

DIMENSIONS: mm

TOLERANCES UNLESS OTHERWISE SPECIFIED:
0 PLC ±-
1 PLC ±
2 PLC ±0.13
3 PLC ±
4 PLC ±
ANGLES ±1°

MATERIAL 1
FINISH 2

DWN K. WHITAKER 05NOV2007
CHK C. JONES 05NOV2007
APVD C. JONES 05NOV2007
PRODUCT SPEC 108-1836
APPLICATION SPEC 114-13000
WEIGHT -

TE Connectivity

NAME HEADER ASSY, VERTICAL, SURFACE MOUNT, SURF MNT HOLDDOWN, TIN, DUAL ROW, SPCL PKGING, MICRO MATE-N-LOK (TM)

SIZE A2 | CAGE CODE - | DRAWING NO C-1586842 | RESTRICTED TO -

CUSTOMER DRAWING | SCALE 4:1 | SHEET 1 OF 2 | REV C4

1586842

1471-9 (3/13)

THIS DRAWING IS UNPUBLISHED. RELEASED FOR PUBLICATION 20
© COPYRIGHT 20 BY - ALL RIGHTS RESERVED.

REVISIONS

P	LTR	DESCRIPTION	DATE	DWN	APVD
	-	SEE SHEET 1	-	-	-

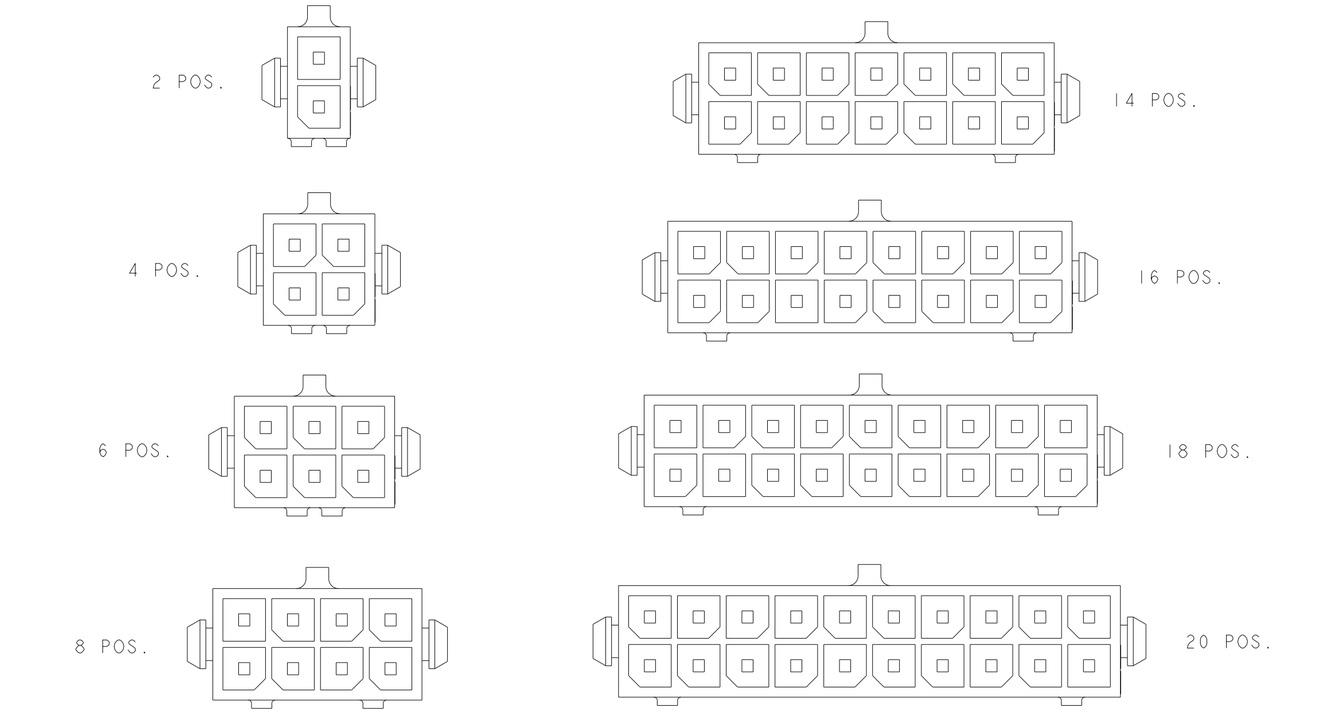

KEYING BY POSITION SIZE

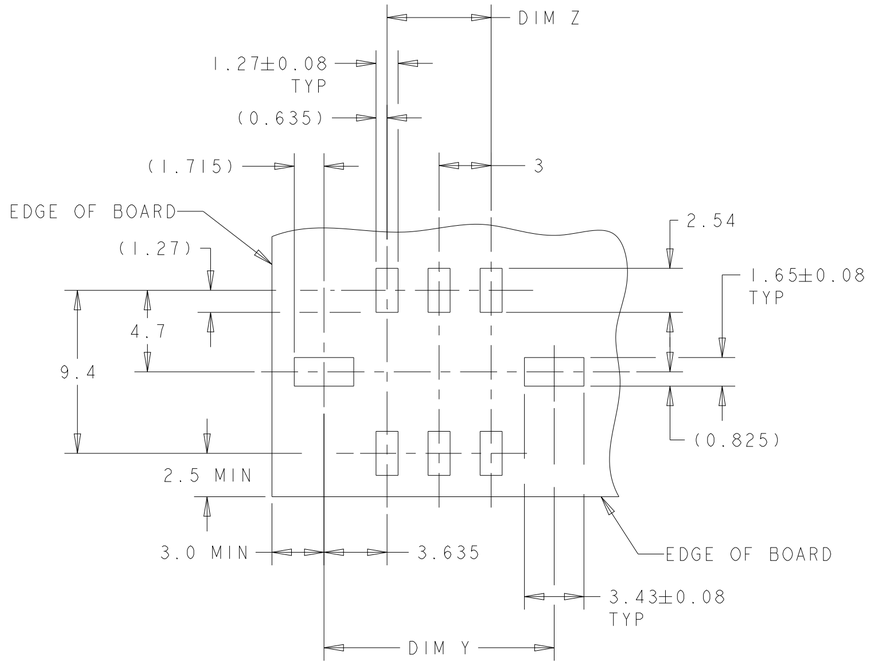

RECOMMENDED PCB LAYOUT 4
(COMPONENT SIDE)

THIS DRAWING IS A CONTROLLED DOCUMENT.

DIMENSIONS: mm

TOLERANCES UNLESS OTHERWISE SPECIFIED:
0 PLC ±-
1 PLC ±
2 PLC ±0.13
3 PLC ±
4 PLC ±
ANGLES ±1°

MATERIAL - -

FINISH - -

DWN K. WHITAKER 05NOV2007
CHK C. JONES 05NOV2007
APVD C. JONES 05NOV2007
PRODUCT SPEC 108-1836
APPLICATION SPEC 114-13000
WEIGHT -

TE Connectivity

NAME HEADER ASSY, VERTICAL, SURFACE MOUNT, SURF MNT HOLDDOWN, TIN, DUAL ROW, SPCL PKGING, MICRO MATE-N-LOK (TM)

SIZE A2 | CAGE CODE - | DRAWING NO C-1586842 | RESTRICTED TO -

CUSTOMER DRAWING | SCALE 4:1 | SHEET 2 OF 2 | REV C4