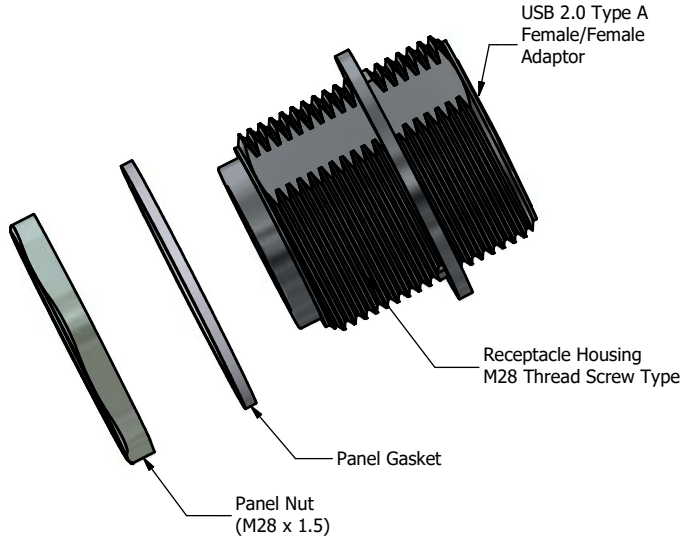

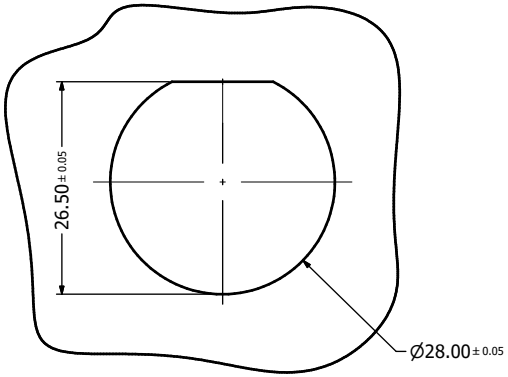

Recommended Panel Cutout ⓒ

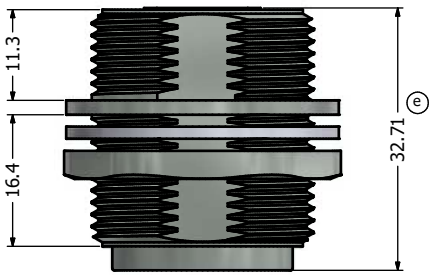

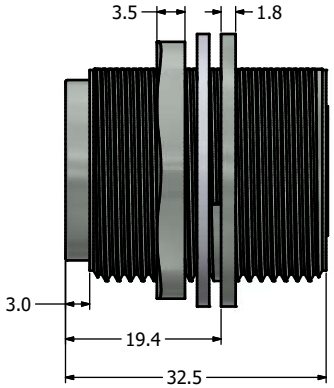

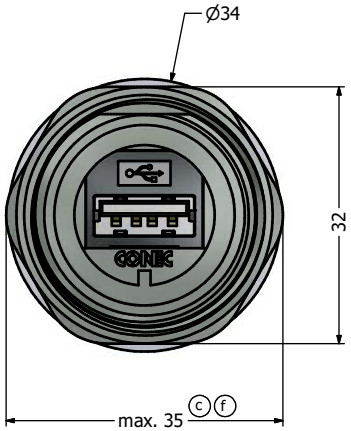

Notes:

1. Electrical Specifications:
   - Meets USB 2.0 Specification
   - Contact Resistance: 30 mOhm max.
   - Insulation Resistance: 1000 MOhm min. @ 100 VDC
   - Current Rating: 1.5 A max. at 25˚C
   - Working Voltage: 30 V (RMS) max.
   - DWV: 500 VAC/60s at sea level
   - Operating Temperature: -40˚C to +85˚C
2. Material and Finish:
   ⓓ - Receptacle Housing: Zinc Die-Cast, Nickel Plated
   - Panel Nut: Brass, Nickel Plated
   - Panel Gasket: Silicon, Color: White
   - USB Adaptor Insulator: PBT, UL94 V-0, Black
   - USB Adaptor Metal Shell: Copper Alloy, Nickel Plated
   - USB Adaptor Overmold: PBT UL94 V-0, Black
   - USB Contacts: Copper Alloy, Finish: 30 u" Gold min. over Nickel
3. Connector can be front or rear mounted to a maximum panel thickness of 3.2 mm.
4. IP67 rated when fully mated with appropriate mating connector

Pin-Assignment

Type A F		Type A F
Pin1	---------	Pin1
Pin2	---------	Pin2
Pin3	---------	Pin3
Pin4	---------	Pin4
Shell	---------	Shell

RoHS compliant

THIS DRAWING MAY NOT BE COPIED OR REPRODUCED IN ANY WAY, MAY NOT BE PASSED ON TO A THIRD PARTY WITHOUT WRITTEN PERMISSION. OWNERSHIP AND COPYRIGHT OF CONEC CORPORATION

DOT NOT ALTER CAD DRAWING BY HAND

Customer:

Name	Title	Approval Date

Rev.	Changes	Date	Name
1 x f	Ä21-0426	25.10.2021	Bub
e	1 x e	May/22/2013	Vincnet Ke
d	1 x d	Jan/12/2012	Vincent Ke
c	2 x c	Mar/08/2011	Vincent Ke
b	1 x b	Jun/01/2009	Vincent Ke
a	original		

Tolerance
Unless otherwise specified
0 PLC ± 0.50
1 PLC ± 0.38
2 PLC ± 0.25
3 PLC ± 0.10
ANGLES ± 3˚

2008	Date	Name
Draw.	Oct. 31	Vincent Ke
Appd.	Oct. 31	J. Chaudry
Norm		
D-old		

Autodesk Inventor

CONEC®

Scale: | Dim. in mm

Material: See Notes

Title:
IP67 USB Receptacle Assembly Kit
with USB 2.0 Type A F/F Adaptor
Metal Version

Drawing No.: 17K1A114 | DIN A3

Part No.: 17-200321 | Sheet 1/1