THIS DRAWING IS A CONTROLLED DOCUMENT.

LOC	DIST
1	-

REVISIONS

P	LTR	DESCRIPTION	DATE	DWN	APVD
	B1	REVISED MARKINGS	06NOV2012	MZ	JC

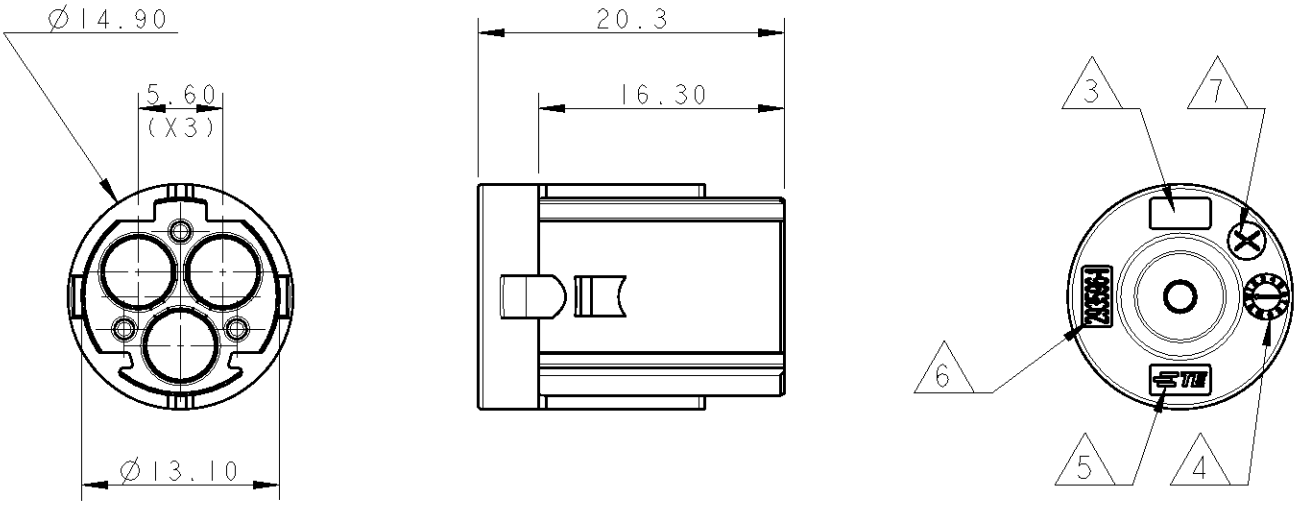

NOTES:

1) MATERIAL: POLYAMIDE GLASS FILLED
COLOUR GRAY

2) PACKAGING: SEE TE PACKAGING
SPECIFICATION 107-20294

3 AREA FOR AGENCY APPROVAL LOGO

4 DATE CODE

5 TE LOGO

6 TE PART NUMBER

7 TOOL CAVITY CODE

3D VIEWS, FOR
REFERENCE ONLY

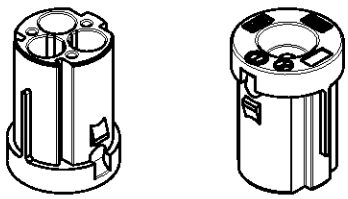

SCALE 1:1

COLOUR	DESCRIPTION	REV.	PART NUMBER
GRAY	SOCKET CAP NECTOR* M-LINE	B	293596-1

THIS DRAWING IS UNPUBLISHED. RELEASED FOR PUBLICATION 2010
© COPYRIGHT 2010 BY -
ALL RIGHTS RESERVED.

DIMENSIONS: mm

TOLERANCES UNLESS OTHERWISE SPECIFIED:

0 PLC	±-
1 PLC	±0.3
2 PLC	±0.20
3 PLC	±-
4 PLC	±-
ANGLES	±3°

DWN M. ZUCCA 10DEC2009
CHK M. ZUCCA 10DEC2009
APVD G. TURCO 10DEC2009

PRODUCT SPEC 108-20304

APPLICATION SPEC 114-20152

WEIGHT ~2.5 g

MATERIAL NOTE 1 | FINISH -

TE Connectivity

NAME SOCKET CAP
NECTOR* M-LINE

SIZE	CAGE CODE	DRAWING NO	RESTRICTED TO
A4	00779	C-293596	-

Customer Drawing | SCALE 2:1 | SHEET 1 OF 1 | REV B1