THIS DRAWING IS UNPUBLISHED. RELEASED FOR PUBLICATION 20
© COPYRIGHT 20 BY TYCO ELECTRONICS CORPORATION. ALL RIGHTS RESERVED.

LOC	DIST
A	66

REVISIONS

P	LTR	DESCRIPTION	DATE	DWN	APVD
	A	RELEASED	10APR2013	KH	SX
	B	ECR-17-004650	31MAR2017	TB	TE
	C	ECR-17-008475	12JUNE2017	TB	TE
	D	ECR-21-005260	11MAY2021	FJ	YY

PART NUMBER	REVISION	DESCRIPTION	FEED TYPE
2151576-1	D	FINE CRIMP HEIGHT ADJUST	MECHANICAL
2151576-2	D	FINE CRIMP HEIGHT ADJUST	PNEUMATIC
5-2151576-1	D	SEAL STRIPPER CRIMPER TERMINATING UNIT	MECHANICAL
5-2151576-2	D	SEAL STRIPPER CRIMPER TERMINATING UNIT	PNEUMATIC
7-2151576-1	D	MECHANICAL AND CRIMP TOOLING KIT	MECHANICAL
7-2151576-2	D	PNEUMATIC AND CRIMP TOOLING KIT	PNEUMATIC
7-2151576-7	B	CRIMP TOOLING KIT	-

ATLANTIC VERSION TERMINATOR INTERFACE ADAPTER

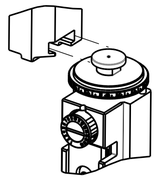

APPLICATOR DATA		
CRIMP	SIZE	TYPE
WIRE	2.54 mm [.100]	F
INSUL	5.08 mm [.200]	O
APPLICATOR INSTRUCTIONS 408-35042		

TERMINAL DATA: TE TERMINAL			TE CRIMP SPECIFICATION
TERMINAL NAME: POWER QUADLOK, SOCKET CONTACT, SWS			
WIRE STRIP LENGTH 4.70-5.30 mm [.185-.209 IN]		INSULATION DIAMETER RANGE ∅ -	
TERMINAL APPLICATION SPECIFICATION	114-18141-1	-	-
	-	-	-

TERMINALS APPLIED 7

TE TERMINAL	TE TERMINAL	TE SEAL	TE SEAL
968121-2	968133-2	967607-1	
968121-4	968133-5		

6

SEAL INSULATION DIAMETER RANGE
∅ 2.2-3.0 mm

WIRE SIZE	CRIMP HEIGHT mm [INCH]	CRIMP HEIGHT REFERENCE SETTING 4
2.50mm2	1.99+/-0.05 [.078+/-.002]	6.3
1.50mm2	1.69+/-0.05 [.067+/-.002]	9.5

1. RECOMMENDED SPARE PARTS
2. REFER TO SUPPLIED INSTRUCTION SHEET FOR CLEANING, LUBRICATION AND STORAGE OF APPLICATOR.
3. APPLY PART NUMBER 1-23419-5 LOCTITE TO THREADS OF ITEMS 180. APPLY PART NUMBER 2-23419-6 LOCTITE TO THREADS OF ITEM 242.
4. CRIMP HEIGHT REFERENCE SETTING WAS THE SETTING USED WHEN THE APPLICATOR WAS QUALIFIED AT THE FACTORY. ADJUSTMENT MAY BE NECESSARY WHEN RUNNING APPLICATOR IN THE FIELD.
5. THIS APPLICATOR DOES NOT CUT CARRIER STRIP.
6. APPLY TORQ-SEAL IN ALLEN SOCKET TO FILL HOLE AFTER FLAT HD HAS BEEN ADJUSTED TO CORRECT HEIGHT AT QUALIFICATION.
7. TERMINAL LUBRICANT IS RECOMMENDED.
8. UNLESS SPECIFIED OTHERWISE TORQUE VALUES SHALL BE USED PER DOCUMENT, 101-35000.

*WARNING
ON INSTALLATION, SET WIRE DISC TO CRIMP HEIGHT REFERENCE SETTING FOR LARGEST WIRE SIZE. CRIMP HEIGHT REFERENCE SETTINGS GREATER THAN THE VALUE SHOWN MAY CAUSE DAMAGE TO THE CRIMP TOOLING, REFER TO THE INSTRUCTION SHEET FOR PROPER SETUP AND ADJUSTMENTS.

	-77	-72	-71	-52	-51	-2	-1	PART NO	DESCRIPTION	ITEM NO
	-	-	-	1	1	-	-	1803515-3	RAM ASSEMBLY, SF ATLANTIC	293
	-	-	-	1	1	-	-	3-1803583-7	APPLICATOR BASIC ASSEMBLY, SF	292
	-	1	-	1	-	1	-	2119641-1	FEED CAM, AIR FEED	248
	-	1	1	1	1	1	1	2119082-7	CAM, SNAIL, INSULATION ADJUSTMENT	244
	-	1	1	1	1	1	1	2079764-1	WASHER, WAVE SPRING, CREST-TO-CREST	243
3	-	1	1	1	1	1	1	2119083-1	RETAINER, INSULATION DIAL	242
	-	-	1	-	1	-	1	2119580-1	MECHANICAL FEED ASSEMBLY	239
	-	1	-	1	-	1	-	2844940-1	AIR FEED MODULE	238
	-	-	-	1	1	-	-	4-1722335-3	STRIPPER, SIDE FEED	182
3	-	-	-	1	1	-	-	1-5018030-0	NUT, HEX, REG, RoHS, M3.5	181
	-	-	-	1	1	-	-	1-1752354-8	STANDOFF,HOLD-DOWN	180
	-	-	-	1	1	-	-	993111-1	PIN, SLOTTED SPRING 3.0 X 20.0	177
	-	-	-	1	1	-	-	5-22280-0	SPRING, COMPRESSION	176
	-	-	-	1	1	-	-	1752353-3	GUIDE PIN,HOLDDOWN	175
	-	-	-	1	1	-	-	1901680-2	GUIDE PIN,HOLDDOWN	174
	-	REF	REF	REF	REF	REF	REF	994970-2	COUNTER, MAGNETIC	164
7	-	1	1	1	1	1	1	2119955-1	ASSY, LUBRICATOR, SIDE FEED	113
	-	1	1	1	1	1	1	2844908-1	SCREW, LOCKING	99
	-	1	1	1	1	1	1	2844907-1	POST, LOCKING	98
	-	1	1	1	1	1	1	1-690438-0	FRONT STRIP GUIDE	96
	-	1	1	1	1	1	1	455888-5	SPACER, CRIMPER	82
	-	1	1	1	1	1	1	1803607-3	DOCUMENTATION PACKAGE	71
	-	1	1	1	1	1	1	2119791-6	DEPRESSOR, WIRE	70
	-	1	1	1	1	1	1	2119943-1	WASHER, SPACER	69
	-	1	1	1	1	1	1	2119740-1	TAG,IDENTIFICATION	67
	-	2	2	2	2	2	2	2168078-1	SCREW, DRIVE, RH, RoHS, 2 x .188	66
	-	1	1	1	1	1	1	2168083-2	SCR, SKT HD CAP, RoHS, M4 X 8.0	60
	-	1	1	1	1	1	1	5-18022-5	SCR, HEX HD CAP, M4 X 6.0	59
	-	1	1	1	1	1	1	5018030-1	NUT, HEX, REG, RoHS, M3	58
6	-	1	1	1	1	1	1	1-2168083-3	SCR, SKT HD CAP, RoHS, M3 X 16	57
	-	1	1	1	1	1	1	1-1338683-6	FEED PAWL	56
	-	4	4	4	4	4	4	2168083-3	SCR, SKT HD CAP, RoHS, M4 X 12.0	54
	-	2	2	2	2	2	2	2168083-8	SCR, SKT HD CAP, RoHS, M4 X 16	53
	-	1	1	1	1	1	1	5018030-1	NUT, HEX, REG, RoHS, M3	52
	-	1	1	1	1	1	1	811242-5	BUMPER, HOLD DOWN	51
	-	1	1	1	1	1	1	690753-2	SPACER, TONKER	50
	-	1	2	1	2	1	2	18023-9	SCR, SKT HD CAP M4 X 6.0	49
	-	-	1	-	1	-	1	2119652-1	FEED CAM, PRE FEED	48
	-	-	1	-	1	-	1	2119653-1	FEED CAM, POST FEED	47
	-	1	1	-	-	1	1	1-1803583-7	APPLICATOR BASIC ASSEMBLY, SF	46
	-	1	1	-	-	1	1	1803515-1	RAM ASSEMBLY, SF ATLANTIC	44
	-	1	1	1	1	1	1	1803602-1	SCR, BHSC, RoHS (M8 X 25)	41
	-	1	1	1	1	1	1	1-1752356-2	SUPPORT, TERMINAL	34
	-	2	2	2	2	2	2	2079383-5	SCR, BHSC, RoHS (M4 X 20)	33
	-	2	2	2	2	2	2	3-2844962-0	SPACER, CYLINDRICAL, STRIP GUIDE	30
	-	1	1	1	1	1	1	2844992-6	ASSEMBLY, STRIP GUIDE	29
	-	1	1	1	1	1	1	1-455888-0	SPACER, CRIMPER	28
	-	2	2	2	2	2	2	22283-1	SPRING, COMPRESSION	27
	-	1	1	1	1	1	1	240792-1	DRAG, TERMINAL	25
	-	1	1	1	1	1	1	1320928-6	STRIP GUIDE	24
	-	1	1	-	-	1	1	2168083-2	SCR, SKT HD CAP, RoHS, M4 X 8.0	21
	-	2	2	1	1	2	2	1-18028-2	WASHER, FLAT, REG M4	20
	-	1	1	-	-	1	1	2119533-1	STRIPPER, SIDE FEED	19
	-	1	1	1	1	1	1	3-22280-3	SPRING, COMPRESSION	12
	-	1	1	1	1	1	1	1-356885-3	STOP, SHEAR	11
1	-	1	1	1	1	1	1	1-2119805-1	SHEAR HOLDER, FRONT	10
1	-	1	1	1	1	1	1	318059-9	FLOATING SHEAR, FRONT	9
1	1	2	2	1	1	1	1	4-1333206-9	ANVIL, COMBINATION .100	8
	-	1	1	1	1	1	1	7-240641-1	SPACER	7
	-	-	-	-	-	-	-	-	-	6
	-	1	1	1	1	1	1	1803080-1	DEPRESSOR, SHEAR	5
	-	1	1	1	1	1	1	2-238011-1	BLOCK, CRIMPER SPACER	4
1	1	2	2	1	1	1	1	2-1633996-3	CRIMPER, INSULATION SPECIAL	3
	-	1	1	1	1	1	1	1-455888-1	SPACER, CRIMPER	2
1	1	2	2	1	1	1	1	1803454-4	CRIMPER, WIRE	1

ATLANTIC VERSION
Shown on sheets 1 of 4 & 2 of 4
(Pacific version shown on sheets 3 of 4 & 4 of 4)

THIS DRAWING IS A CONTROLLED DOCUMENT FOR TYCO ELECTRONICS CORPORATION. IT IS SUBJECT TO CHANGE AND THE CONTROLLING DRAWING ORGANIZATION SHOULD BE CONTACTED FOR THE LATEST REVISION.

DWN	K HUANG	31JAN2013
CHK	S XI	31JAN2013
APVD	S XI	31JAN2013

DIMENSIONS: mm

TOLERANCES UNLESS OTHERWISE SPECIFIED:
0 PLC ±
1 PLC ±
2 PLC ±
3 PLC ±
4 PLC ±
ANGLES ±

MATERIAL - -
FINISH - -

PRODUCT SPEC -
APPLICATION SPEC -
WEIGHT -

TE Connectivity
Harrisburg, PA 17105-3608

NAME Ocean Side Feed Applicator -

SIZE	CAGE CODE	DRAWING NO	RESTRICTED TO
A1	00779	C-2151576	-

Customer Accessible Production Drawing | SCALE 1:2 | SHEET 1 OF 4 | REV D

SHEETS 3 & 4 ARE NOT REQUIRED FOR ATLANTIC VERSION

THIS DRAWING IS UNPUBLISHED. RELEASED FOR PUBLICATION 20
© COPYRIGHT 20 BY TYCO ELECTRONICS CORPORATION. ALL RIGHTS RESERVED.

LOC	DIST
A	66

REVISIONS

P	LTR	DESCRIPTION	DATE	DWN	APVD
	-	SEE SHEET 1	-	-	-

FEED TYPE MECHANICAL

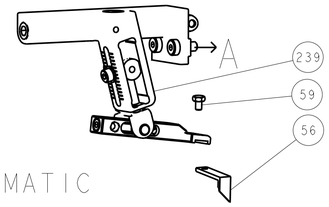

PNEUMATIC

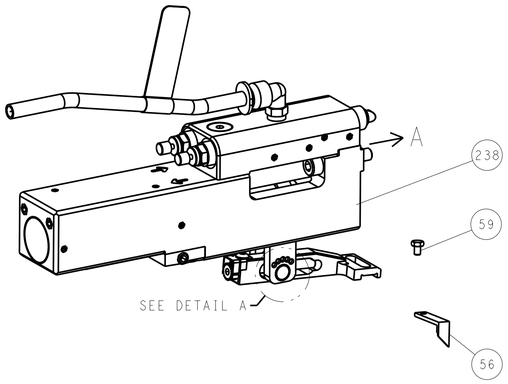

FEED SPRING SETTING POSITION
(SHOWN FROM REAR SIDE)

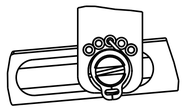

DETAIL A

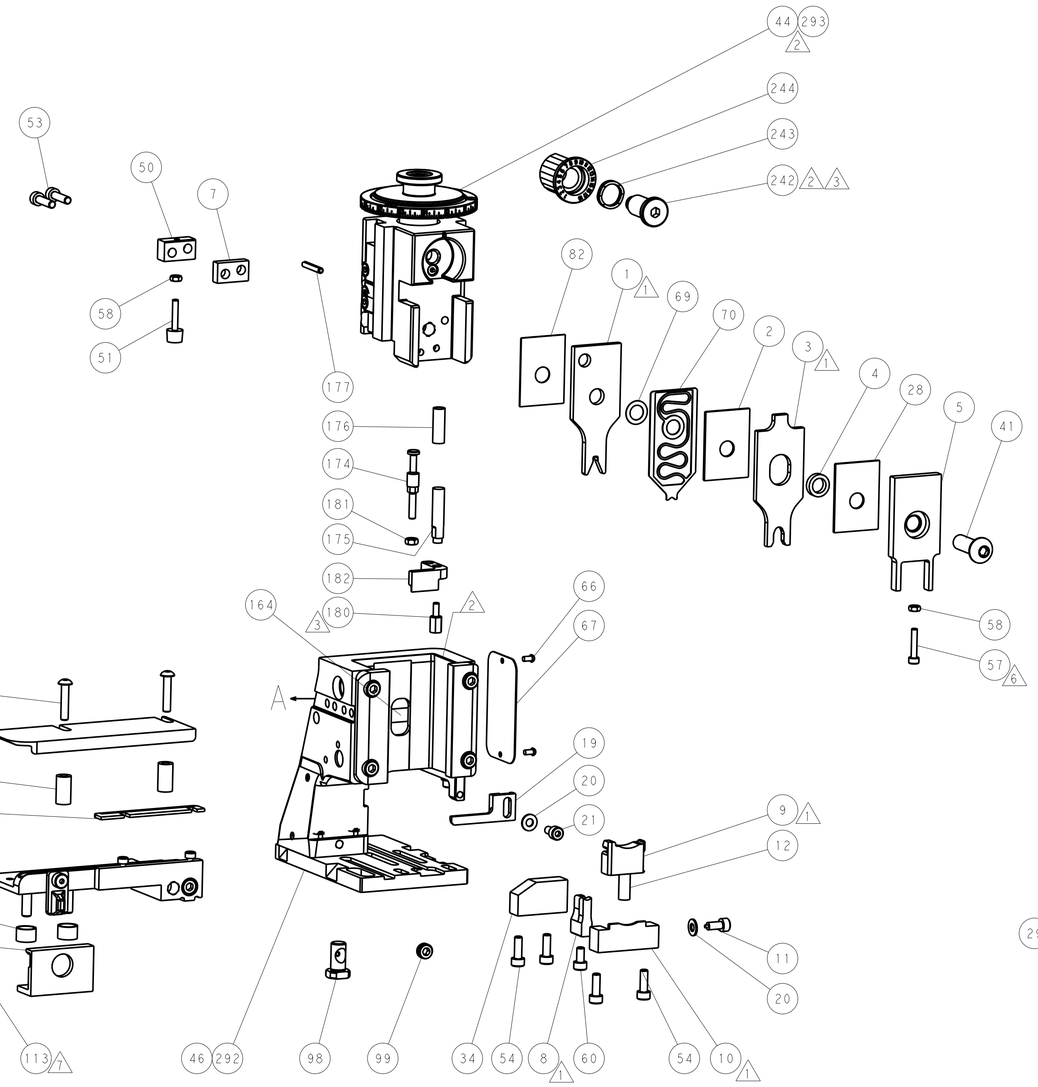

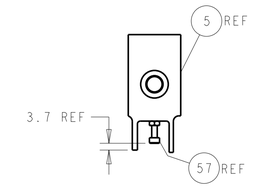

SHEAR DEPRESSOR DETAIL

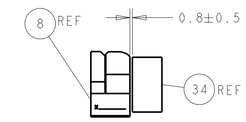

TERMINAL SUPPORT LOCATION

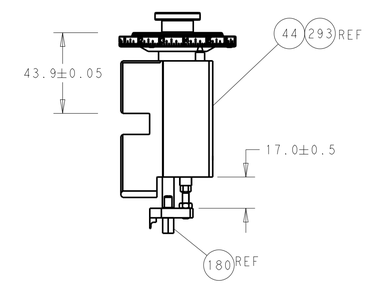

RAM AND HOLDDOWN SET-UP

ITEM 30 LOCATED AT
FRONT HOLES

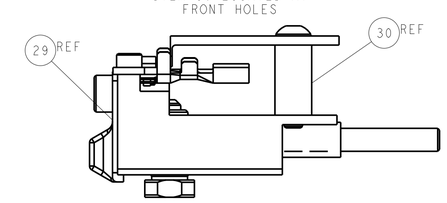

FEED TRACK POSITION
GUIDE BY INSULATION BARREL

CAM POSITIONS

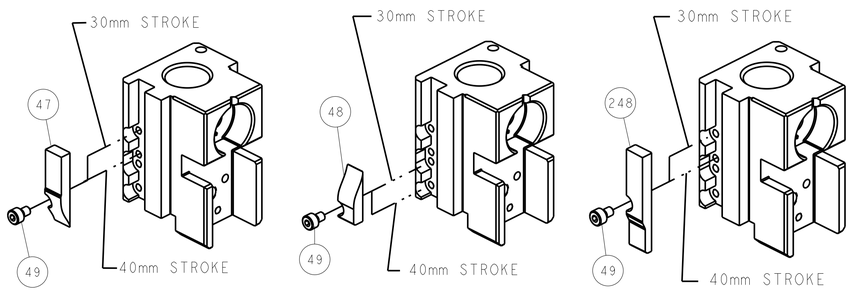

MECHANICAL
POST FEED

MECHANICAL
PRE FEED

AIR FEED

ATLANTIC VERSION

Shown on sheets 1 of 4 & 2 of 4
(Pacific version shown on sheets 3 of 4 & 4 of 4)

THIS DRAWING IS A CONFIDENTIAL DOCUMENT FOR TYCO ELECTRONICS CORPORATION IT IS SUBJECT TO CHANGE AND THE CONTROLLING ENGINEERING ORGANIZATION SHOULD BE CONTACTED FOR THE LATEST REVISION.

DIMENSIONS: mm

TOLERANCES UNLESS OTHERWISE SPECIFIED:
0 PLC ±
1 PLC ±
2 PLC ±
3 PLC ±
4 PLC ±
ANGLES ±

MATERIAL - - -
FINISH - -

DWN	K.HUANG	31JAN2013
CHK	S.XI	31JAN2013
APVD	S.XI	31JAN2013

PRODUCT SPEC -
APPLICATION SPEC -
WEIGHT -

TE Connectivity
Harrisburg, PA 17105-3608

NAME: Ocean Side Feed Applicator -

SIZE	CAGE CODE	DRAWING NO	RESTRICTED TO
A1	00779	C-2151576	-

Customer Accessible Production Drawing

SCALE	SHEET	OF	REV
1:2	2	4	D

SHEETS 3 & 4 ARE NOT REQUIRED FOR ATLANTIC VERSION

THIS DRAWING IS UNPUBLISHED. RELEASED FOR PUBLICATION 20
© COPYRIGHT 20 BY TYCO ELECTRONICS CORPORATION. ALL RIGHTS RESERVED.

LOC	DIST
A	66

REVISIONS

P	LTR	DESCRIPTION	DATE	DWN	APVD
	-	SEE SHEET 1	-	-	-

PART NUMBER	REVISION	DESCRIPTION	FEED TYPE
2-2151576-1	D	FINE CRIMP HEIGHT ADJUST	MECHANICAL
2-2151576-2	D	FINE CRIMP HEIGHT ADJUST	PNEUMATIC
7-2151576-7	B	CRIMP TOOLING KIT	-

PACIFIC VERSION TERMINATOR INTERFACE ADAPTER

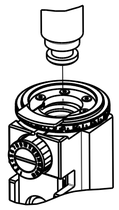

APPLICATOR DATA		
CRIMP	SIZE	TYPE
WIRE	2.54 mm [.100]	F
INSUL	5.08 mm [.200]	O
APPLICATOR INSTRUCTIONS 408-35042		

TERMINAL DATA: TE TERMINAL		TE CRIMP SPECIFICATION	
TERMINAL NAME: POWER QUADLOK, SOCKET CONTACT, SWS			
WIRE STRIP LENGTH 4.70-5.30 mm [.185-.209 IN]		INSULATION DIAMETER RANGE ∅ -	
TERMINAL APPLICATION SPECIFICATION	114-18141-1	-	-
	-	-	-

TERMINALS APPLIED 7

TE TERMINAL	TE TERMINAL	TE SEAL	TE SEAL
968121-2	968133-2	967607-1	
968121-4	968133-5		

6

SEAL INSULATION DIAMETER RANGE
∅ 2.2-3.0 mm

WIRE SIZE	CRIMP HEIGHT mm [INCH]	CRIMP HEIGHT REFERENCE SETTING 4
2.50mm2	1.99+/-0.05 [.078+/-.002]	6.3
1.50mm2	1.69+/-0.05 [.067+/-.002]	9.5

1 RECOMMENDED SPARE PARTS

2 REFER TO SUPPLIED INSTRUCTION SHEET FOR CLEANING, LUBRICATION AND STORAGE OF APPLICATOR.

3 APPLY PART NUMBER 2-23419-6 LOCTITE TO THREADS OF ITEM 242.

4 CRIMP HEIGHT REFERENCE SETTING WAS THE SETTING USED WHEN THE APPLICATOR WAS QUALIFIED AT THE FACTORY. ADJUSTMENT MAY BE NECESSARY WHEN RUNNING APPLICATOR IN THE FIELD.

5 THIS APPLICATOR DOES NOT CUT CARRIER STRIP.

6 APPLY TORQ-SEAL IN ALLEN SOCKET TO FILL HOLE AFTER FLAT HD HAS BEEN ADJUSTED TO CORRECT HEIGHT AT QUALIFICATION.

7 TERMINAL LUBRICANT IS RECOMMENDED.

8. UNLESS SPECIFIED OTHERWISE TORQUE VALUES SHALL BE USED PER DOCUMENT, 101-35000.

*WARNING
ON INSTALLATION, SET WIRE DISC TO CRIMP HEIGHT REFERENCE SETTING FOR LARGEST WIRE SIZE. CRIMP HEIGHT REFERENCE SETTINGS GREATER THAN THE VALUE SHOWN MAY CAUSE DAMAGE TO THE CRIMP TOOLING, REFER TO THE INSTRUCTION SHEET FOR PROPER SETUP AND ADJUSTMENTS.

	-77	-22	-21	PART NO	DESCRIPTION	ITEM NO
	-	1	1	2119082-7	CAM, SNAIL, INSULATION ADJUSTMENT	244
	-	1	1	2079764-1	WASHER, WAVE SPRING, CREST-TO-CREST	243
3	-	1	1	2119083-1	RETAINER, INSULATION DIAL	242
	-	-	1	2119580-1	MECHANICAL FEED ASSEMBLY	239
	-	1	-	2844940-1	AIR FEED MODULE	238
	-	REF	REF	994970-2	COUNTER, MAGNETIC	164
	-	1	-	2119641-2	FEED CAM, AIR FEED	151
	-	1	1	2168083-8	SCR, SKT HD CAP, RoHS, M4 X 16	144
	-	4	4	2168083-9	SCR, SKT HD CAP, RoHS, M4 X 20	143
	-	-	1	2119653-2	FEED CAM, POST FEED	142
	-	1	1	1-1803583-8	APPLICATOR BASIC ASSEMBLY, SF	141
	-	1	1	1803516-1	RAM ASSEMBLY, SF PACIFIC	140
7	-	1	1	2119955-1	ASSY, LUBRICATOR, SIDE FEED	113
	-	1	1	2844908-1	SCREW, LOCKING	99
	-	1	1	2844907-1	POST, LOCKING	98
	-	1	1	1-690438-0	FRONT STRIP GUIDE	96
	-	1	1	455888-5	SPACER, CRIMPER	82
	-	1	1	1803607-3	DOCUMENTATION PACKAGE	71
	-	1	1	2119791-6	DEPRESSOR, WIRE	70
	-	1	1	2119943-1	WASHER, SPACER	69
	-	1	1	2119740-1	TAG,IDENTIFICATION	67
	-	2	2	2168078-1	SCREW, DRIVE, RH, RoHS, 2 x .188	66
	-	1	1	5-18022-5	SCR, HEX HD CAP, M4 X 6.0	59
	-	1	1	5018030-1	NUT, HEX, REG, RoHS, M3	58
6	-	1	1	1-2168083-3	SCR, SKT HD CAP, RoHS, M3 X 16	57
	-	1	1	1-1338683-6	FEED PAWL	56
	-	2	2	2168083-8	SCR, SKT HD CAP, RoHS, M4 X 16	53
	-	1	1	5018030-1	NUT, HEX, REG, RoHS, M3	52
	-	1	1	811242-5	BUMPER, HOLD DOWN	51
	-	1	1	690753-2	SPACER, TONKER	50
	-	1	2	18023-9	SCR, SKT HD CAP M4 X 6.0	49
	-	-	1	2119652-1	FEED CAM, PRE FEED	48
	-	1	1	1803602-1	SCR, BHSC, RoHS (M8 X 25)	41
	-	1	1	1-1752356-2	SUPPORT, TERMINAL	34
	-	2	2	2079383-5	SCR, BHSC, RoHS (M4 X 20)	33
	-	2	2	3-2844962-0	SPACER, CYLINDRICAL, STRIP GUIDE	30
	-	1	1	2844992-6	ASSEMBLY, STRIP GUIDE	29
	-	1	1	1-455888-0	SPACER, CRIMPER	28
	-	2	2	22283-1	SPRING, COMPRESSION	27
	-	1	1	240792-1	DRAG, TERMINAL	25
	-	1	1	1320928-6	STRIP GUIDE	24
	-	1	1	2168083-2	SCR, SKT HD CAP, RoHS, M4 X 8.0	21
	-	2	2	1-18028-2	WASHER, FLAT, REG M4	20
	-	1	1	2119533-1	STRIPPER, SIDE FEED	19
	-	1	1	3-22280-3	SPRING, COMPRESSION	12
	-	1	1	1-356885-3	STOP, SHEAR	11
1	-	1	1	1-2119805-1	SHEAR HOLDER, FRONT	10
1	-	1	1	318059-9	FLOATING SHEAR, FRONT	9
1	1	1	1	4-1333206-9	ANVIL, COMBINATION .100	8
	-	1	1	7-240641-1	SPACER	7
	-	-	-	-	-	6
	-	1	1	1803080-1	DEPRESSOR, SHEAR	5
	-	1	1	2-238011-1	BLOCK, CRIMPER SPACER	4
1	1	1	1	2-1633996-3	CRIMPER, INSULATION SPECIAL	3
	-	1	1	1-455888-1	SPACER, CRIMPER	2
1	1	1	1	1803454-4	CRIMPER, WIRE	1

THIS DRAWING IS A CONTROLLED DOCUMENT FOR TYCO ELECTRONICS CORPORATION. IT IS SUBJECT TO CHANGE WITHOUT NOTICE. HOLDERS OF THIS DOCUMENT SHOULD BE CONTACTED FOR THE LATEST REVISION.

DIMENSIONS: mm

TOLERANCES UNLESS OTHERWISE SPECIFIED:
0 PLC ±
1 PLC ±
2 PLC ±
3 PLC ±
4 PLC ±
ANGLES ±

MATERIAL - -
FINISH - -

DWN K.HUANG 31JAN2013
CHK S.XI 31JAN2013
APVD S.XI 31JAN2013
PRODUCT SPEC -
APPLICATION SPEC -
WEIGHT -

TE Connectivity
Harrisburg, PA 17105-3608

NAME Ocean Side Feed Applicator -

SIZE	CAGE CODE	DRAWING NO	RESTRICTED TO
A1	00779	C-2151576	-

Customer Accessible Production Drawing | SCALE 1:2 | SHEET 3 OF 4 | REV D

PACIFIC VERSION

Shown on sheets 3 of 4 & 4 of 4
(Atlantic version shown on sheets 1 of 4 & 2 of 4)

SHEETS 1 & 2 ARE NOT REQUIRED FOR PACIFIC VERSION

THIS DRAWING IS UNPUBLISHED. RELEASED FOR PUBLICATION 20
© COPYRIGHT 20 BY TYCO ELECTRONICS CORPORATION. ALL RIGHTS RESERVED.

LOC	DIST
A	66

REVISIONS

P	LTR	DESCRIPTION	DATE	DWN	APVD
	-	SEE SHEET 1	-	-	-

FEED TYPE

MECHANICAL

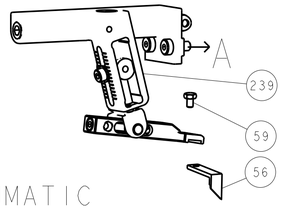

PNEUMATIC

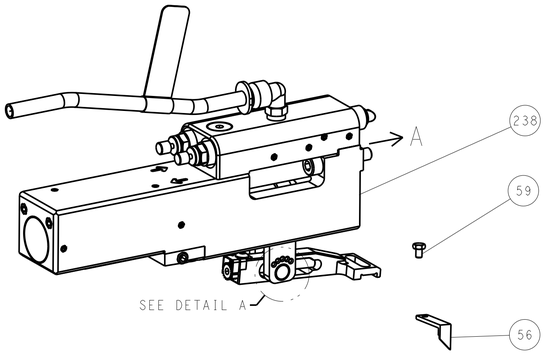

FEED SPRING SETTING POSITION
(SHOWN FROM REAR SIDE)

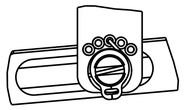

DETAIL A

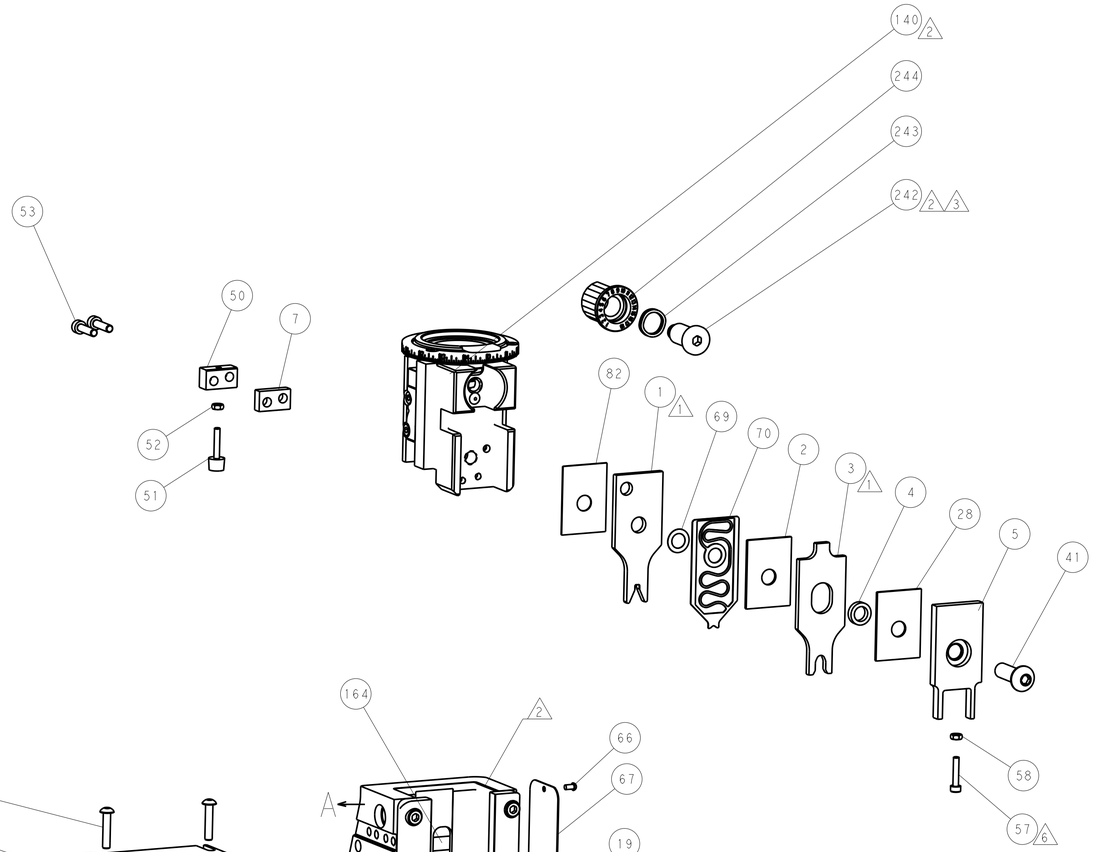

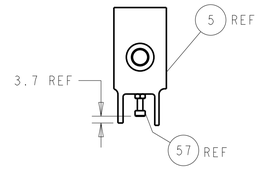

SHEAR DEPRESSOR DETAIL

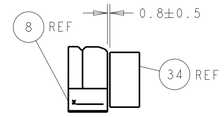

TERMINAL SUPPORT LOCATION

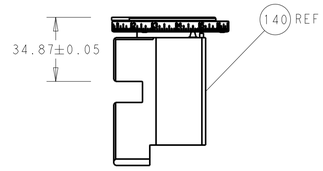

RAM SET-UP

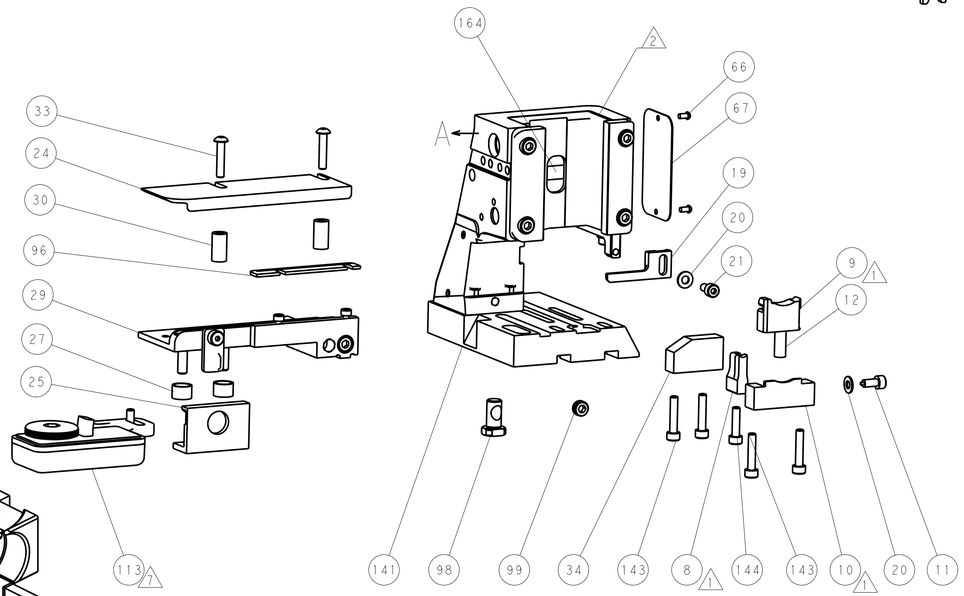

ITEM 30 LOCATED AT
FRONT HOLES

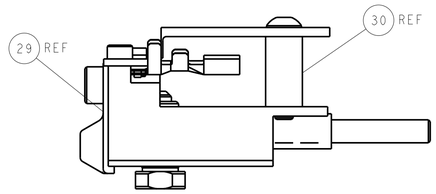

FEED TRACK POSITION
GUIDE BY INSULATION BARREL

CAM POSITIONS

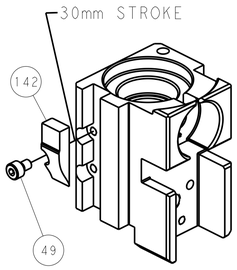

MECHANICAL
POST FEED

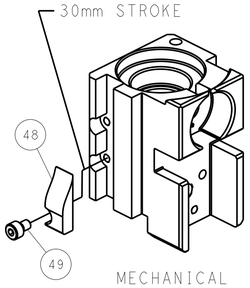

MECHANICAL
PRE FEED

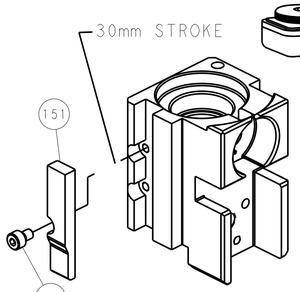

AIR FEED

PACIFIC VERSION
Shown on sheets 3 of 4 & 4 of 4
(Atlantic version shown on sheets 1 of 4 & 2 of 4)

THIS DRAWING IS A CONTROLLED DOCUMENT FOR TYCO ELECTRONICS CORPORATION. IT IS SUBJECT TO CHANGE AND THE CONTROLLING ENGINEERING ORGANIZATION SHOULD BE CONTACTED FOR THE LATEST REVISION.

DIMENSIONS: mm

TOLERANCES UNLESS OTHERWISE SPECIFIED:
0 PLC ±
1 PLC ±
2 PLC ±
3 PLC ±
4 PLC ±
ANGLES ±

MATERIAL -
FINISH -

DWN	K.HUANG 31JAN2013
CHK	S.XI 31JAN2013
APVD	S.XI 31JAN2013
PRODUCT SPEC	-
APPLICATION SPEC	-
WEIGHT	-

TE Connectivity
Harrisburg, PA 17105-3608

NAME: Ocean Side Feed Applicator -

SIZE	CAGE CODE	DRAWING NO	RESTRICTED TO
A1	00779	C-2151576	-

Customer Accessible Production Drawing | SCALE 1:2 | SHEET 4 OF 4 | REV D

SHEETS 1 & 2 ARE NOT REQUIRED FOR PACIFIC VERSION