SC620

Octal LED Driver, General Purpose Current Sink with Serial Interface

POWER MANAGEMENT

Features

- Wide current setting range — 31.25µA to 25mA
- Eight identical current drivers with independent control
- 5% current matching, 7% accuracy
- I²C interface for microprocessor control
- I²C slave address 1110 000x
- Less than 1µA quiescent current in shutdown
- Low dropout voltage — ≤ 150mV
- Over-temperature protection
- MLPQ-UT-16 package (3mm x 3mm)
- Ultra-thin 0.6mm maximum package height
- Fully WEEE and RoHS compliant

Applications

- LCD backlighting LED driver
- Multicolor and RGB LED driver
- General purpose current sink array
- General purpose digital output (open-drain) expander
- Auto-focus voice-coil driver

Description

The SC620 is a multi-purpose LED driver with eight identical, independently controlled current sinks. Each current sink can drive an LED by connecting the LED's anode to the system power supply and the cathode to the current sink input pin. Any combination of outputs can be enabled or disabled for optimal design flexibility.

The SC620 also employs an adjustable global current gain setting register to allow the current setting step size to vary from 31.25µA to 500µA. This provides a wide range of options for LED variation and dimming functions. The maximum output is also scaled by this step size, with a maximum of 25mA at the highest step setting.

Multi-colored and white LEDs with different forward voltages can be driven using the same SC620 due to its floating cathode technology. This feature allows each output pin to vary in voltage from 150mV to V_{IN} - 1.5V.

All current control is programmed using an I²C interface bus. Only a single input bypass capacitor is required — no other external resistors or capacitors are needed. The 3mm x 3mm MLPQ package and minimal support components make the SC620 an ideal solution for low-cost, area-conscious backlighting designs.

Typical Application Circuit

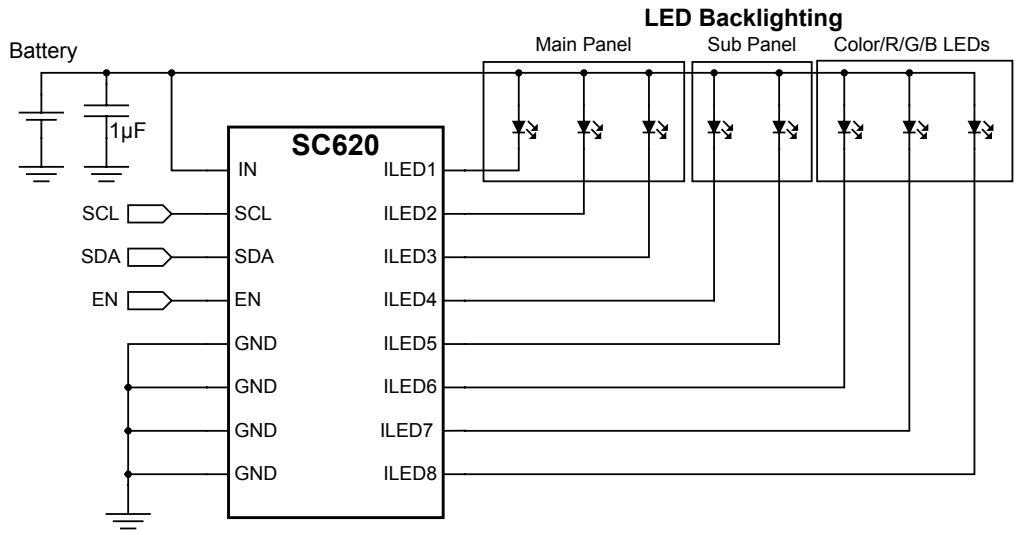

© 2009 Semtech Corporation

Pin Configuration

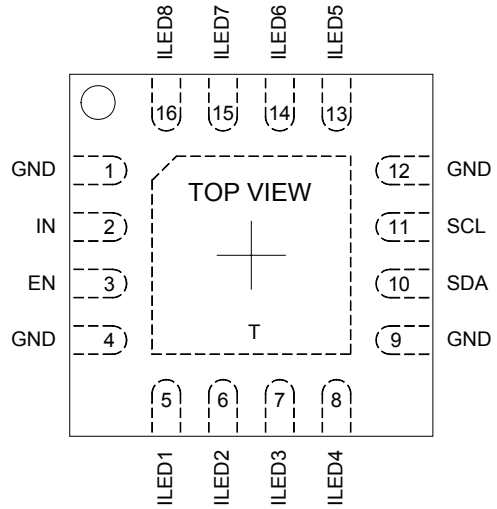

MLPQ-UT-16; 3x3, 16 LEAD

θ_{JA} = 39°C/W

Ordering Information

Device	Package
SC620ULTRT[1][2]	MLPQ-UT-16 3×3[2]
SC620EVB	Evaluation Board

Notes:

(1) Available in tape and reel only. A reel contains 3,000 devices.

(2) Lead-free package only. Device is WEEE and RoHS compliant.

Marking Information

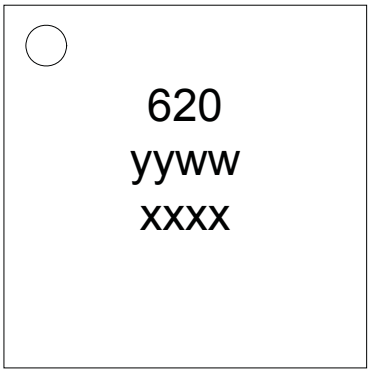

yy = two digit year of manufacture

ww = two digit week of manufacture

xxxx = lot number

Absolute Maximum Ratings

IN (V) ..... -0.3 to +6.0
Pin Voltage — All Other Pins (V) ..... -0.3 to V_{IN} + 0.3
ESD Protection Level[1] (kV) 2

Recommended Operating Conditions

Ambient Temperature Range (°C)..... -40 to +85

Thermal Information

Thermal Resistance, Junction to Ambient[2] (°C/W) 39
Operating Junction Temperature (°C).....-40 to +150
Storage Temperature Range (°C) ..... -65 to +150
Peak IR Reflow Temperature (10s to 30s) (°C)..... +260

Exceeding the above specifications may result in permanent damage to the device or device malfunction. Operation outside of the parameters specified in the Electrical Characteristics section is not recommended.

NOTES:
(1) Tested according to JEDEC standard JESD22-A114-B.
(2) Calculated from package in still air, mounted to 3 x 4.5 (in), 4 layer FR4 PCB with thermal vias under the exposed pad per JESD51 standards.

Electrical Characteristics

Unless otherwise noted, T_A = +25°C for Typ, -40°C to 85°C for Min and Max, V_{IN} = 2.7V to 5.5V, C_{IN} = 1µF, $\Delta V_F \leq 1.5V$

Parameter	Symbol	Condition	Min	Typ	Max	Units
Maximum LED Current Setting[1]	I_{LEDn}			25		mA
LED Current Setting Accuracy[1]	ΔI_{LEDn}	I_{LEDn} = 15mA, V_F = 3.4V, V_{ILEDn} = 2V, T_A = 25°C	-7		+7	%
Load Regulation	$\Delta I_{LEDn} / \Delta V_F$	5mA < $I_{LEDn} \leq$ 25mA, T_A = 25°C	-2		2	% / V
LED Current Matching Accuracy[1]	$I_{LED-to-LED}$	I_{LEDn} = 15mA, T_A = 25°C	-5		+5	%
Dropout Voltage	V_{DO}	I_{LEDn} = 25mA			150	mV
Shutdown Current	I_{SHDN}	EN = GND		0.1	1	µA
Current Step Size	I_{STEP}	Normal Mode[3]		500		µA
		Low-Current Mode[4]		31.25		µA
Quiescent Current	I_Q	Standby: EN = V_{IN}, LED1-8 disabled[2]			60	µA
		EN = V_{IN}, I_{LED1-8} = 1.968mA[4]		720		µA
		EN = V_{IN}, I_{LED1-8} = 25mA[3]		4.5		mA

Electrical Characteristics (continued)

Parameter	Symbol	Condition	Min	Typ	Max	Units
Current Sink Turn-on Time	t_{ON}	from 0 to 95% of target			1	ms
Current Sink Turn-off Time	t_{OFF}	from 90% to 10% of set value		1		µs
EN Input High Threshold	V_{IH}	V_{IN} = 5.5V	1.6			V
EN Input Low Threshold	V_{IL}	V_{IN} = 2.7V			0.4	V
EN Input High Current	I_{IH}	V_{IN} = 5.5V			2	µA
Over Temperature Protection(5)	T_{OTP}			155		°C
I²C Interface(5) Interface complies with slave mode I²C interface as described by Philips I²C specification version 2.1 dated January, 2000.						
Digital Input Voltage	V_{B-IL}				0.4	V
	V_{B-IH}		1.6			V
SDA Output Low Level		I_{DIN} (SDA) ≤ 3mA			0.4	V
Digital Input Current	I_{B-IN}		-0.2		0.2	µA
Schmitt Trigger Input Hysteresis	V_{HYS}			0.1		V
Maximum Glitch Pulse Rejection	t_{SP}			50		ns
I/O Pin Capacitance	C_{IN}			10		pF
I²C Timing						
Clock Frequency	f_{SCL}			400	440	kHz
SCL Low Period	t_{LOW}		1.3			µs
SCL High Period	t_{HIGH}		0.6			µs
Data Hold Time	t_{HD_DAT}		0			µs
Data Setup Time	t_{SU_DAT}		100			ns
Setup Time for Repeated START Condition	t_{SU_STA}		0.6			µs
Hold Time for Repeated START Condition	t_{HD_STA}		0.6			µs
Setup Time for STOP Condition	t_{SU_STO}		0.6			µs

Electrical Characteristics (continued)

Parameter	Symbol	Condition	Min	Typ	Max	Units
I²C Timing (continued)						
Bus-Free Time Between STOP and START	t_{BUF}		1.3			µs
Interface Start-up Time	t_{EN}	Bus Start-up Time After EN Pin is Pulled High			350	µs

Notes:
(1) Current step size = 500µA - See Table 1 for other step size options.
(2) Outputs are disabled but I²C bus is active
(3) Current gain register set to maximum value - see Control Register section for details.
(4) Current gain register set to minimum value - see Control Register section for details.
(5) Guaranteed by design.

Typical Characteristics

Low Current Settings with Anode = V_{IN}

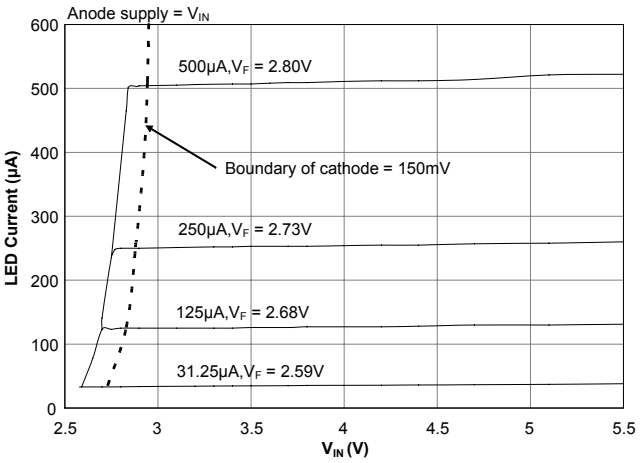

Low Current Settings with Anode = 5V

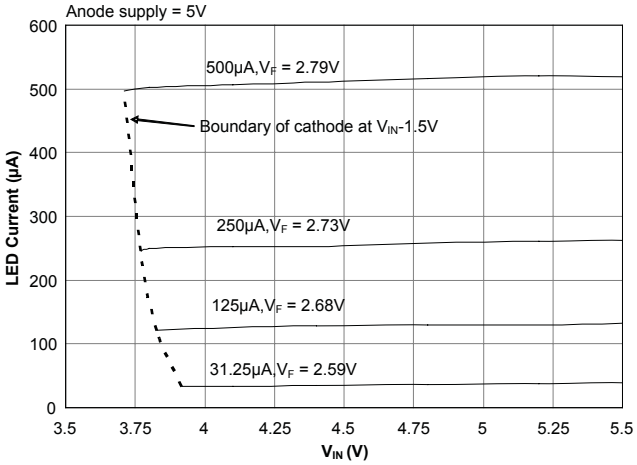

Mid Current Settings with Anode = V_{IN}

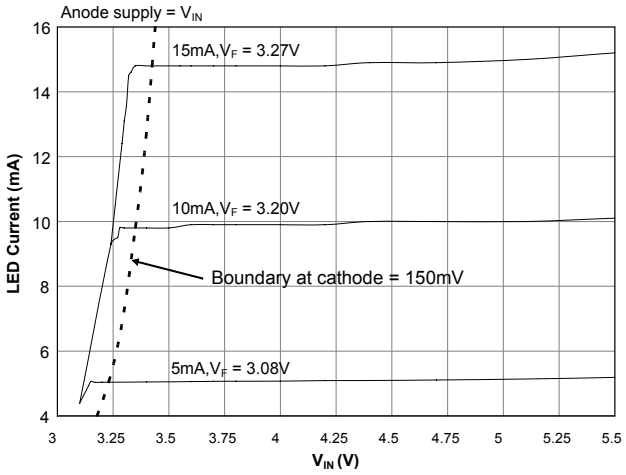

Mid Current Settings with Anode = 5V

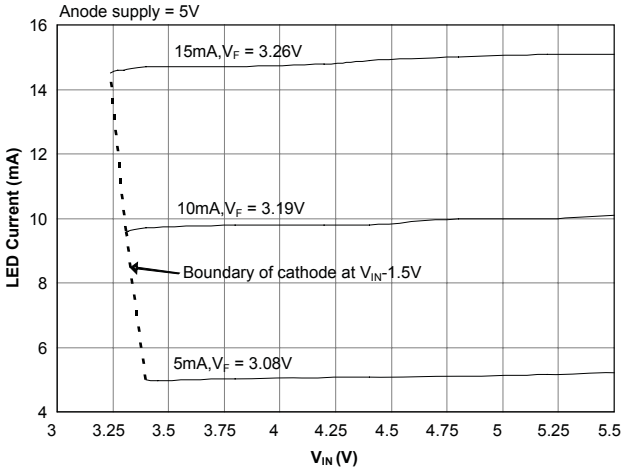

High Current Settings with Anode = V_{IN}

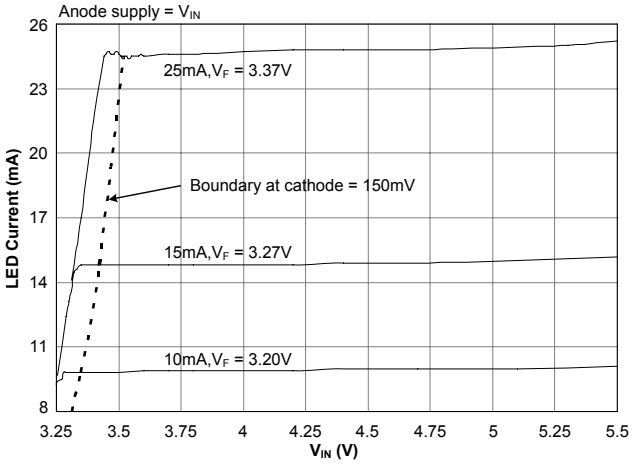

High Current Settings with Anode = 5V

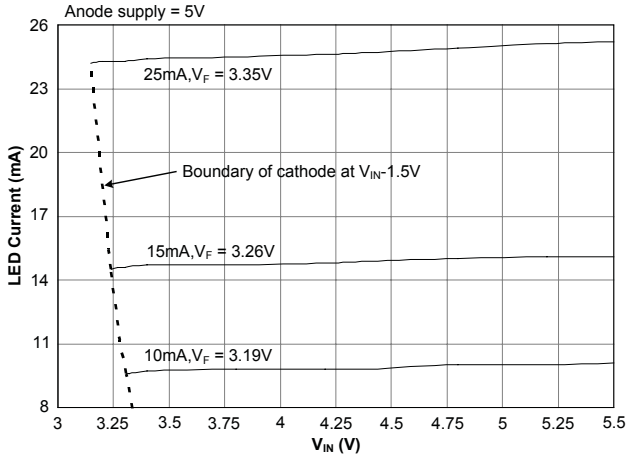

Typical LED Current Matching

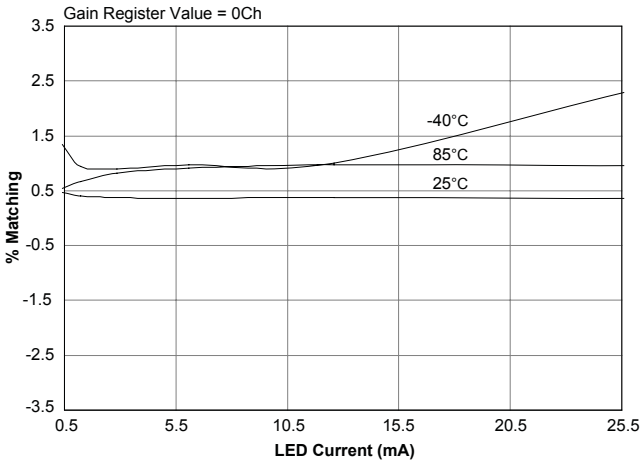

Typical LED Current Accuracy (25°C)

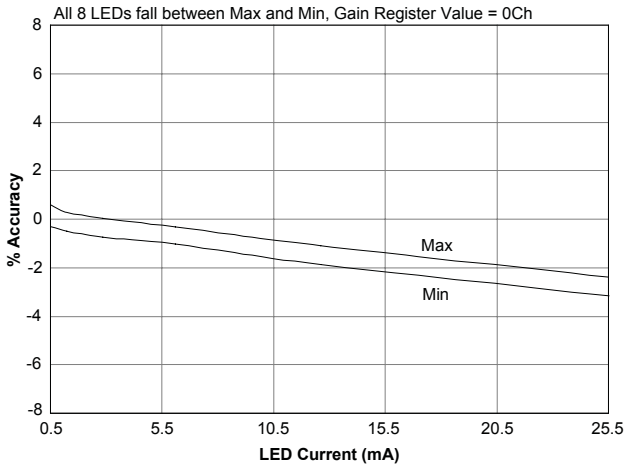

Typical LED Current Accuracy (-40°C)

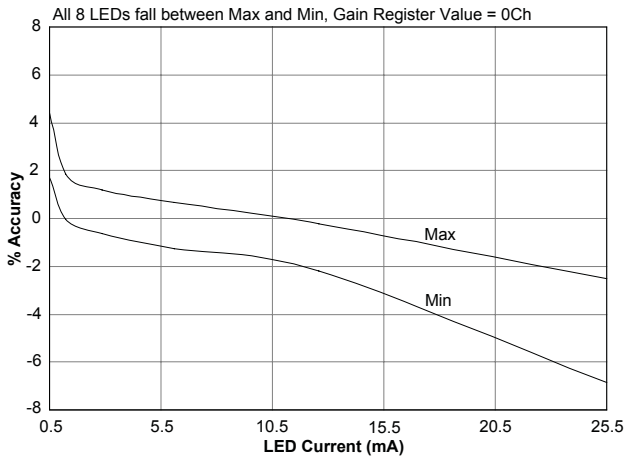

Typical LED Current Accuracy (85°C)

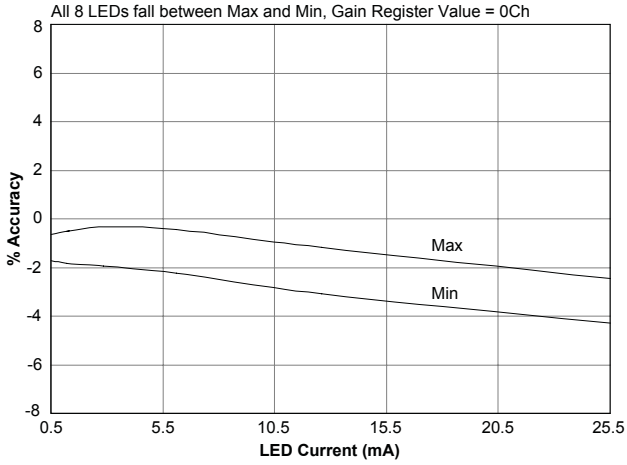

Pin Descriptions

Pin #	Pin Name	Pin Function
1	GND	Ground
2	IN	Input voltage supply
3	EN	Enable input — active high
4	GND	Ground
5	ILED1	Current sink input for LED 1
6	ILED2	Current sink input for LED 2
7	ILED3	Current sink input for LED 3
8	ILED4	Current sink input for LED 4
9	GND	Ground
10	SDA	I^2C serial data pin (bi-directional)
11	SCL	I^2C clock input
12	GND	Ground
13	ILED5	Current sink input for LED 5
14	ILED6	Current sink input for LED 6
15	ILED7	Current sink input for LED 7
16	ILED8	Current sink input for LED 8
T	Thermal Pad	Thermal pad for heatsinking purposes. Connect to ground plane using multiple vias. Not connected internally.

Block Diagram

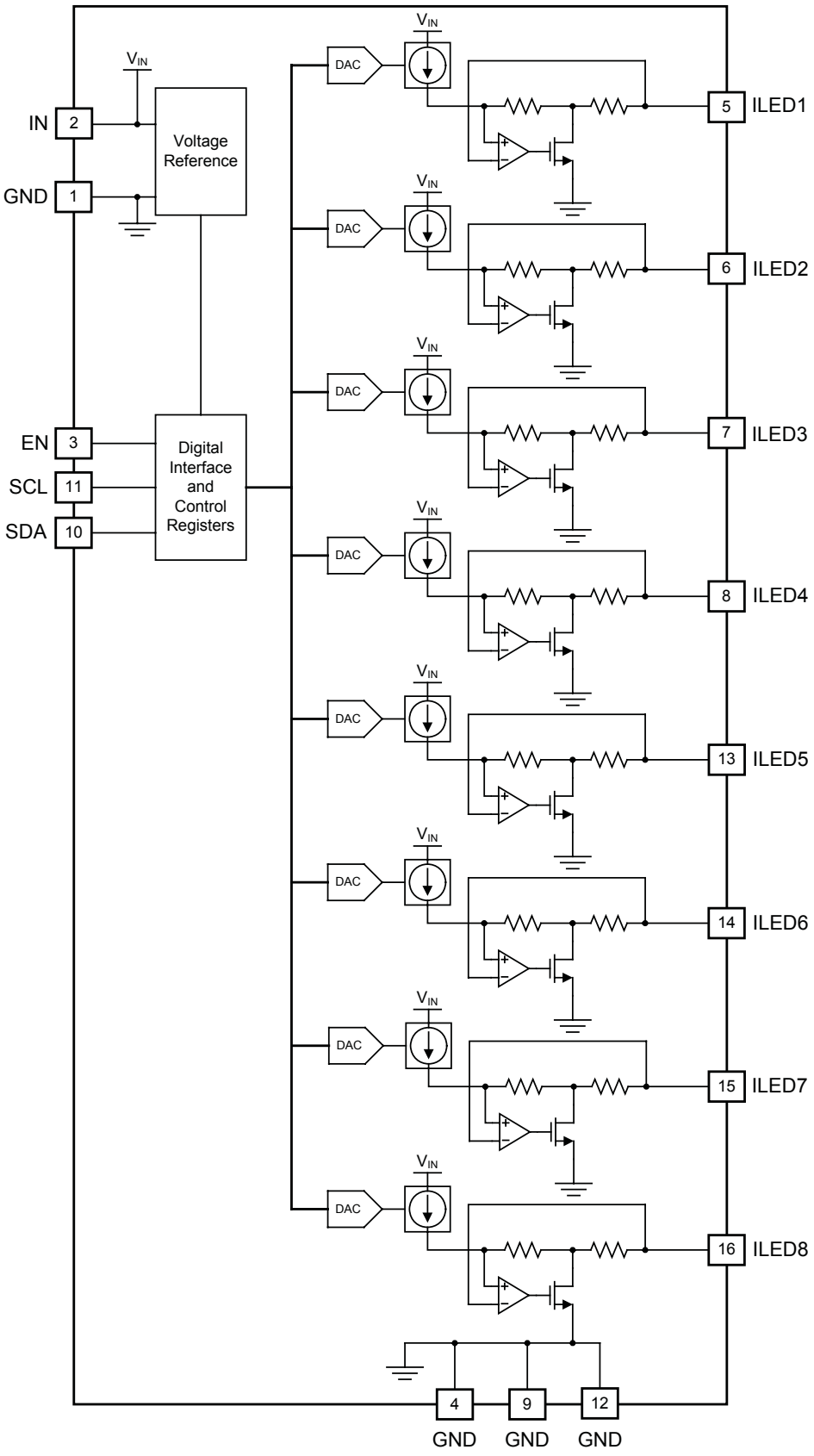

Applications Information

General Description

The SC620 includes eight independently controlled current sinks designed to control LED backlighting for mobile phones and other battery-operated handheld devices. As LED forward voltages decrease for white, blue, and other colored LEDs, there is less need for voltage boosting devices for powering backlight and indicator LEDs. In these types of systems where there is a fixed supply voltage large enough to supply the LEDs or where the LEDs can be powered over the entire battery range, the SC620 provides a simple low-cost driver alternative to charge pump or inductor-based switching boost converters.

Current Sink Design

Each current sink is designed for a pin voltage range between 150mV and V_{IN} - 1.5V. This feature allows the system to operate backlight LEDs with constant current without interference caused by blinking indicator LEDs or driving LEDs with various forward voltages and currents.

Protection Circuitry

The SC620 contains protection circuitry that prevents damage from operating in an unspecified state. These features include:

- Under-voltage Lockout Protection
- Over-temperature Protection
- Short-circuit Protection

Under-Voltage Lockout

An Under-Voltage Lockout Protection (UVLO) circuit disables the device in the event that the input voltage falls below the threshold. UVLO typically occurs at 2V. Hysteresis is provided to prevent chatter.

Short-Circuit Protection

The output sink pins ILED1 through ILED8 are protected against shorting to V_{IN}, prevent device damage in the event of a shorted LED. The source lead of each sink is connected to ground, so the output sink pins do not require protection against being externally shorted to ground, as this would result in zero potential across the sink device.

Over-Temperature Protection

The Over-temperature Protection circuit helps prevent the device from overheating and experiencing a catastrophic failure. When the junction temperature exceeds 155°C, the device is disabled and remains disabled until the junction temperature is reduced.

Layout Considerations

The MLPQ-UT-16 package has a thermal die attach pad located at the center. This pad must be connected to the ground plane through multiple vias as shown (illustration not to scale).

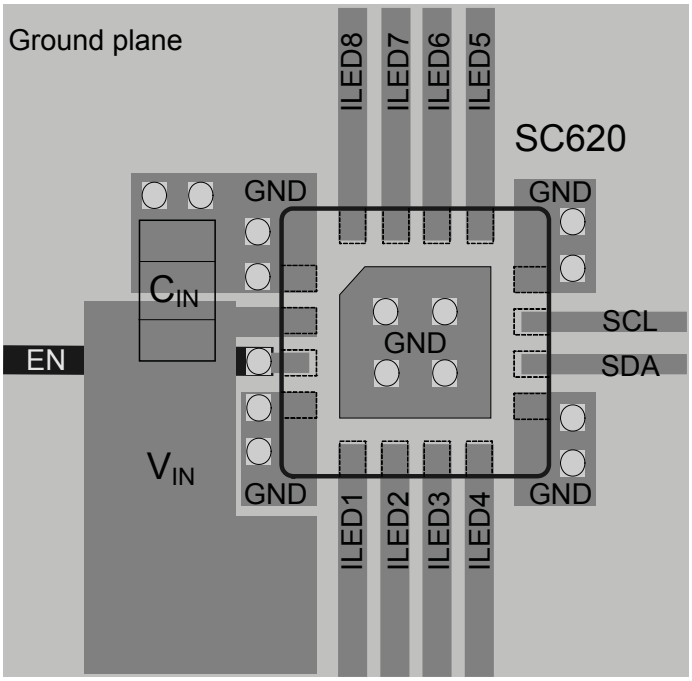

For low noise, four ground pins are located at the corner pins 1, 4, 9 and 12. Connect each of the ground pins directly to the ground plane as shown.

The layout is simple and requires very few components in addition to the LEDs that it will drive. A 1µF decoupling capacitor at the IN pin is required. Place this capacitor near pin 2, and ground it close to the SC620 as shown.

Applications Information (continued)

Application Circuit Examples

Main Backlight Plus Sub-panel Backlight Plus Single RGB LED

This example uses the SC620 to drive a main display, a sub-panel display, and an RGB LED. Independent outputs allow these functions to be supported simultaneously at different intensities. The V_{IN} supply is typically single cell Li-Ion or 5.0V. V_{IN} supply and LED anode voltage may be from different sources. The operating voltage limit of (V_{IN} - 1.5V) at the sink pins must be observed to achieve the specified accuracy of the device.

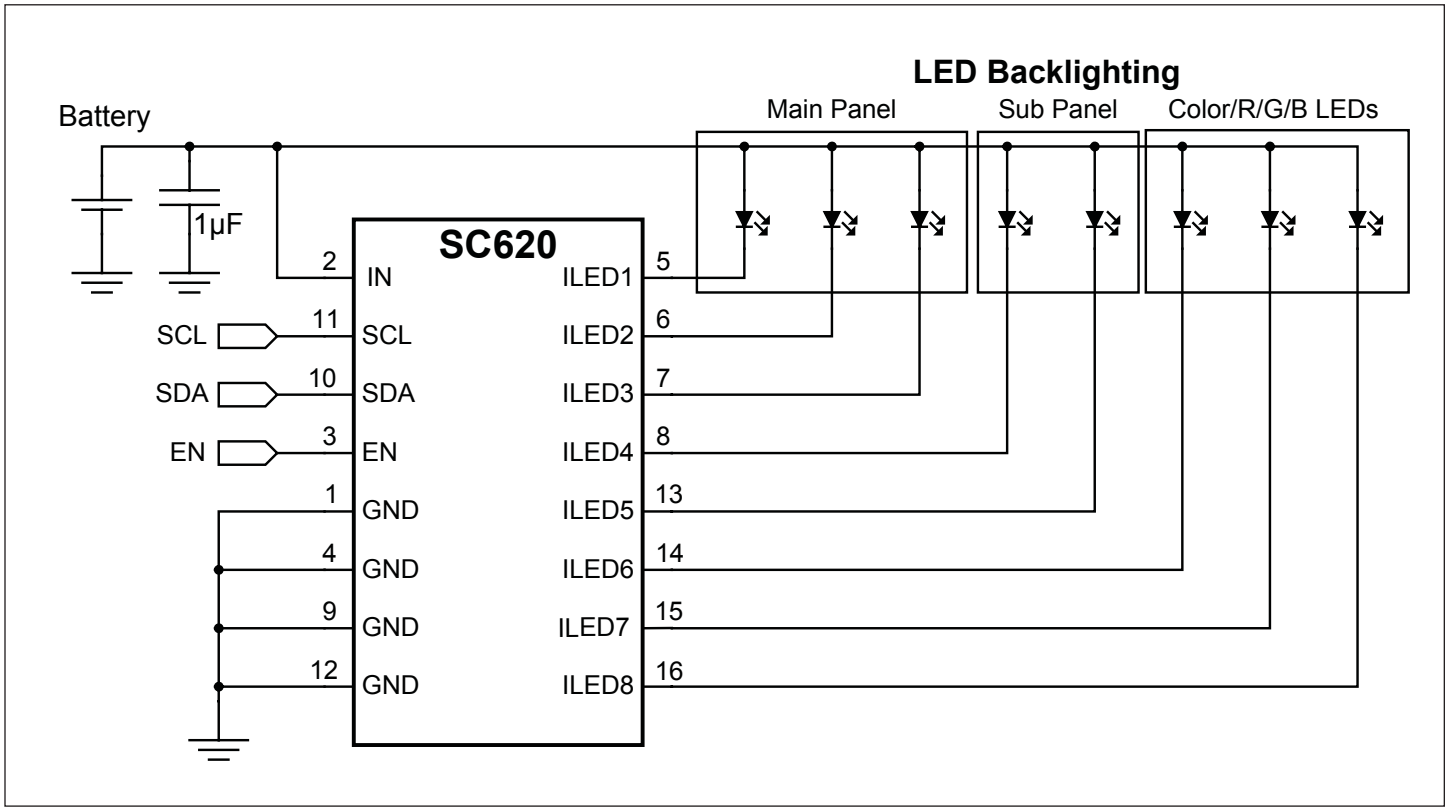

Applications Information (continued)

Backlighting Three LEDs of Any Color Combination Plus Lens Voice Coil Drive and One GPO

This example uses the SC620 to drive 3 backlight LEDs, plus a voice coil actuator for lens auto-focus and one open-drain digital output. Independent outputs allow these functions to be supported simultaneously. The V_{IN} supply is typically single cell Li-Ion or 5.0V. V_{IN} and the LED anode voltage may be supplied by different sources. The operating voltage limit of (V_{IN} - 1.5V) at the sink pins must be observed to achieve the specified accuracy of the device.

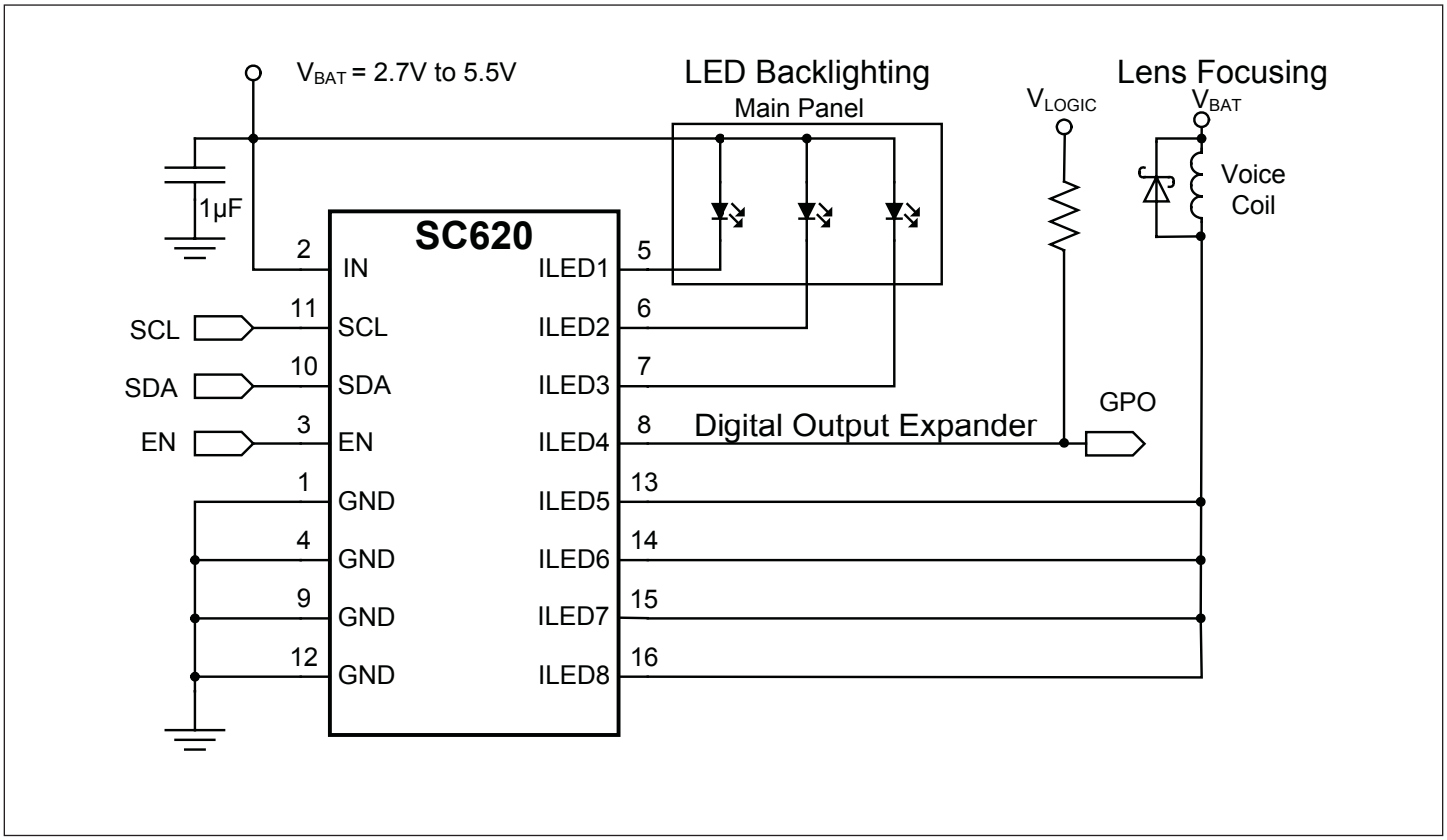

Applications Information (continued)

Backlighting with Series Connected LEDs connected to a Boosted Output Voltage

This example uses the SC620 to drive 32 LEDs in a 4-in-series by 8-in-parallel arrangement. Other arrangements of series and parallel combinations are possible.

To prevent the boost voltage from illuminating the LEDs while the current sinks are off, the boost voltage must follow the SC620 in the start-up sequence. The boost voltage must also power-off before the current sinks turn off in the shut-down sequence. Protection diodes may be necessary to protect the current sinks from destructive voltage levels produced by the boost voltage supply. Schottky diodes are shown in the schematic for the purpose of voltage clamping. These diodes prevent damage to the current sinks in the event that the sink turns off while the boost circuit is on.

The operating voltage limit of (V_{IN} - 1.5V) at the sink pins must be observed to achieve the specified accuracy of the device.

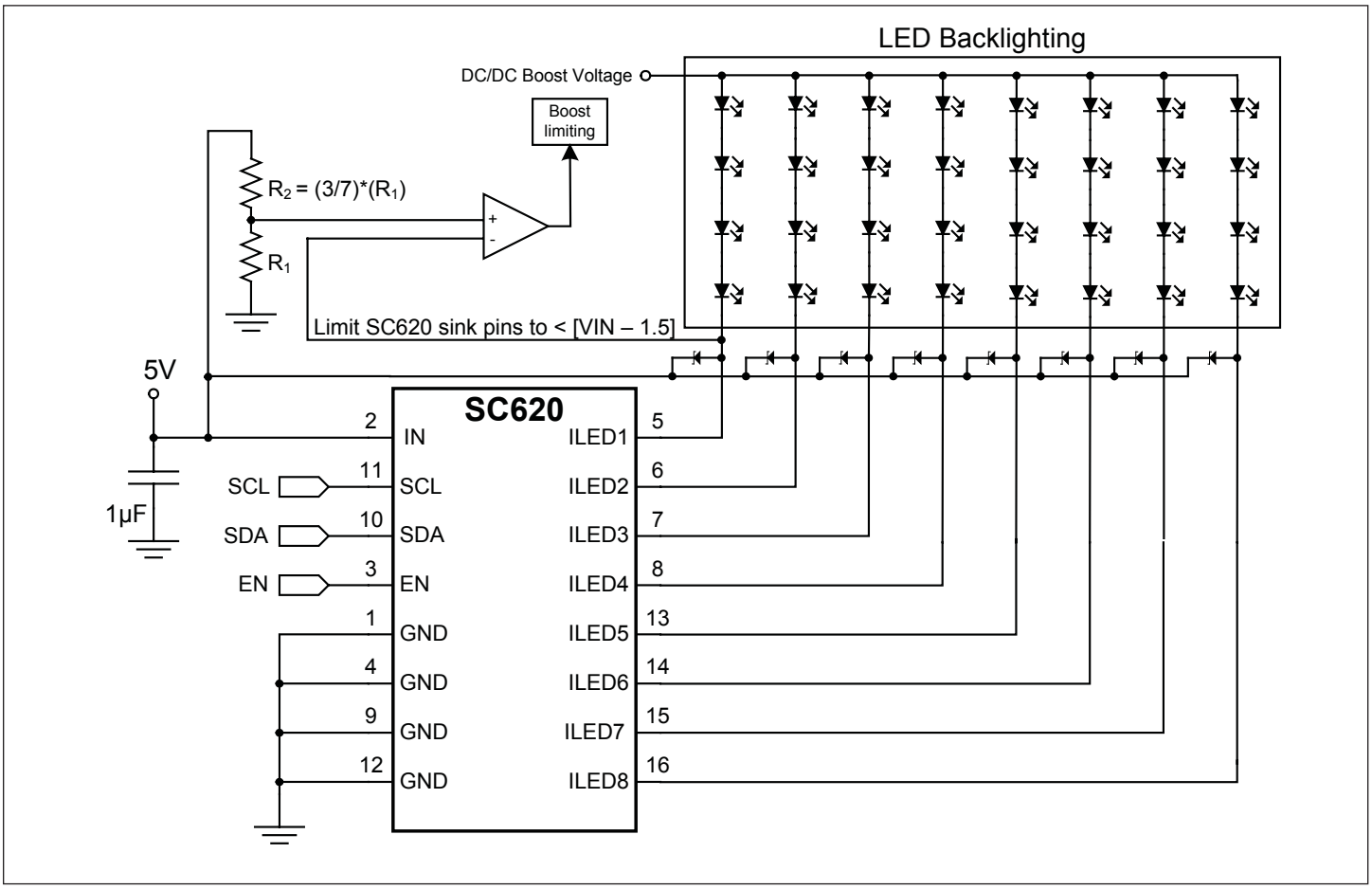

Register Map

Address	D7	D6	D5	D4	D3	D2	D1	D0	Description	Default (1)
00h	L8_EN 1 = on 0 = off	L7_EN 1 = on 0 = off	L6_EN 1 = on 0 = off	L5_EN 1 = on 0 = off	L4_EN 1 = on 0 = off	L3_EN 1 = on 0 = off	L2_EN 1 = on 0 = off	L1_EN 1 = on 0 = off	LED on/off control	00h
01h	X	X	L1_5	L1_4	L1_3	L1_2	L1_1	L1_0	LED1 dimming control	01h
02h	X	X	L2_5	L2_4	L2_3	L2_2	L2_1	L2_0	LED2 dimming control	01h
03h	X	X	L3_5	L3_4	L3_3	L3_2	L3_1	L3_0	LED3 dimming control	01h
04h	X	X	L4_5	L4_4	L4_3	L4_2	L4_1	L4_0	LED4 dimming control	01h
05h	X	X	L5_5	L5_4	L5_3	L5_2	L5_1	L5_0	LED5 dimming control	01h
06h	X	X	L6_5	L6_4	L6_3	L6_2	L6_1	L6_0	LED6 dimming control	01h
07h	X	X	L7_5	L7_4	L7_3	L7_2	L7_1	L7_0	LED7 dimming control	01h
08h	X	X	L8_5	L8_4	L8_3	L8_2	L8_1	L8_0	LED8 dimming control	01h
09h	X	X	X	X	G4	G3	G2	G1	gain register	08h

Note

(1) Default value is the register contents immediately following a high transition at the enable pin.

SC620 Slave Address

Following a start condition, the bus master outputs the address of the slave device. The 7 bit slave address for the SC620 is 1110 000x. The eighth bit is the data direction bit and also the least significant bit (LSB). E0h is used for a write operation, and E1h is used for a read operation.

DEVICE ADDRESS							R/W
1	1	1	0	0	0	0	1/0

Dimming Control Register Description

The dimming control registers set the multiplier used to determine the absolute current setting. Current setting for each current sink is determined by multiplying the current step size (as described in Table 1) by the decimal multiplier in each dimming control register. For example, if the current step size is set to 500µA and the L1 Dimming Control Register bits (L1_5 through L1_0) are set to 010100 (20 decimal), then the output current for ILED1 is set to 20 x 500µA = 10mA. Note that the maximum current setting occurs when the dimming control register bits are set to 110010 (50 decimal) - any bit combination larger than this one will default to the maximum setting.

Table 1 - Gain Setting Values (default = 1000)

G4	G3	G2	G1	Current Step Size (µA)
0	0	0	0	31.25
0	0	0	1	62.5
0	0	1	0	93.75
0	0	1	1	125
0	1	0	0	156.25
0	1	0	1	187.5
0	1	1	0	218.75
0	1	1	1	250
1	0	0	0	281.25
1	0	0	1	312.5
1	0	1	0	343.75
1	0	1	1	375
1	1	0	0	406.25
1	1	0	1	437.5
1	1	1	0	468.75
1	1	1	1	500

SEMTECH

Using the I²C Serial Port

The I²C General Specification

The SC620 is a read-write slave-mode I²C device and complies with the Philips I²C standard Version 2.1 dated January, 2000. The SC620 has eight user-accessible internal 8-bit registers. While there is no auto increment/decrement capability in the SC620 I²C logic, a tight software loop can be designed to randomly access the next register independent of which register you begin accessing. The start and stop commands frame the data-packet and the repeat start condition is allowed if necessary.

SC620 Limitations to the I²C Specifications

Seven bit addressing is used and ten bit addressing is not allowed. Any general call address will be ignored by the SC620. The SC620 is not CBUS compatible. The SC620 can operate in standard mode (100kbit/s) or fast mode (400kbit/s).

Supported Formats:

Direct Format — Write

The simplest format for an I²C write is Direct Format. After the start condition [S], the slave address is sent, followed by an eighth bit indicating a write. The SC620 I²C then acknowledges that it is being addressed, and the master responds with an 8 bit data byte consisting of the register address. The slave acknowledges and the master sends the appropriate 8 bit data byte. Once again the slave acknowledges and the master terminates the transfer with the stop condition [P].

Combined Format — Read

After the start condition [S], the slave address is sent, followed by an eighth bit indicating a write. The SC620 I²C then acknowledges that it is being addressed, and the master responds with an 8 bit data byte consisting of the register address. The slave acknowledges and the master sends the repeated start condition [Sr]. Once again, the slave address is sent, followed by an eighth bit indicating a read. The slave responds with an acknowledge and the previously addressed 8 bit data byte; the master then sends a non-acknowledge (NACK). Finally, the master terminates the transfer with the stop condition [P].

Stop Separated Reads

Stop separated reads can also be used. This format allows a master to set up the register address pointer for a read and return to that slave at a later time to read the data. In this format the slave address followed by a write command are sent after a start [S] condition. The SC620 then acknowledges it is being addressed, and the master responds with the 8-bit register address. The master sends a stop or restart condition and may then address another slave. After performing other tasks, the master can send a start or restart condition to the device with a read command. The SC620 acknowledges this request and returns the data from the register location that had previously been set up.

SEMTECH

Using the I²C Serial Port (continued)

I²C Direct Format Write



S – Start Condition
W – Write = '0'
A – Acknowledge (sent by slave)
P – Stop condition

Slave Address – 7-bit
Register address – 8-bit
Data – 8-bit

I²C Stop Separated Format Read

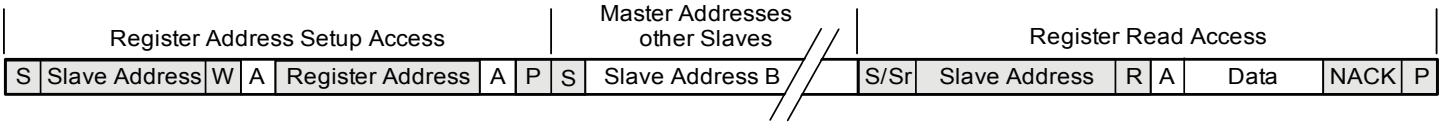

S – Start Condition
W – Write = '0'
R – Read = '1'
A – Acknowledge (sent by slave)
NAK – Non-Acknowledge (sent by master)
Sr – Repeated Start condition
P – Stop condition

Slave Address – 7-bit
Register address – 8-bit
Data – 8-bit

I²C Combined Format Read



S – Start Condition
W – Write = '0'
R – Read = '1'
A – Acknowledge (sent by slave)
NAK – Non-Acknowledge (sent by master)
Sr – Repeated Start condition
P – Stop condition

Slave Address – 7-bit
Register address – 8-bit
Data – 8-bit

Outline Drawing — MLPQ-UT-16 3x3

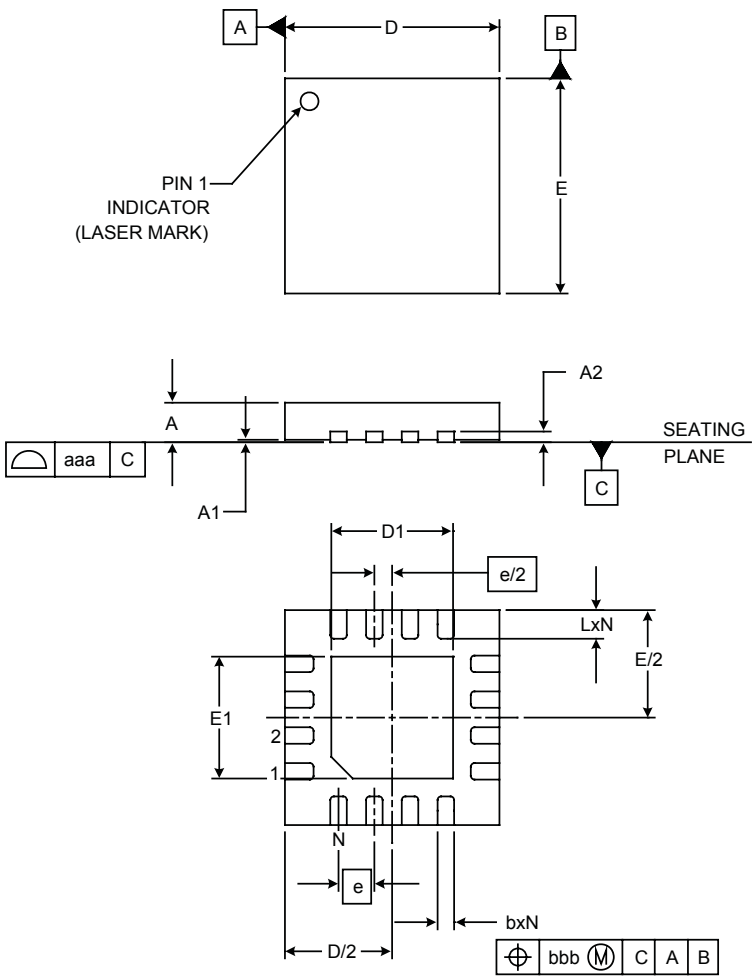

DIMENSIONS						
DIM	INCHES			MILLIMETERS		
	MIN	NOM	MAX	MIN	NOM	MAX
A	.018	-	.024	0.45	-	0.60
A1	.000	-	.002	0.00	-	0.05
A2		(.006)			(0.1524)	
b	.007	.009	.012	0.18	0.23	0.30
D	.114	.118	.122	2.90	3.00	3.10
D1	.061	.067	.071	1.55	1.70	1.80
E	.114	.118	.122	2.90	3.00	3.10
E1	.061	.067	.071	1.55	1.70	1.80
e		.020 BSC			0.50 BSC	
L	.012	.016	.020	0.30	0.40	0.50
N		16			16	
aaa		.003			0.08	
bbb		.004			0.10	

NOTES:

1. CONTROLLING DIMENSIONS ARE IN MILLIMETERS (ANGLES IN DEGREES).
2. COPLANARITY APPLIES TO THE EXPOSED PAD AS WELL AS THE TERMINALS.

Land Pattern — MLPQ-UT-16 3x3

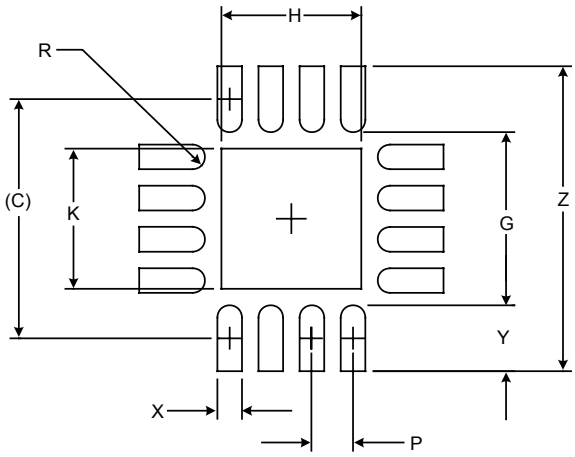

DIMENSIONS		
DIM	INCHES	MILLIMETERS
C	(.114)	(2.90)
G	.083	2.10
H	.067	1.70
K	.067	1.70
P	.020	0.50
R	.006	0.15
X	.012	0.30
Y	.031	0.80
Z	.146	3.70

NOTES:

1. THIS LAND PATTERN IS FOR REFERENCE PURPOSES ONLY. CONSULT YOUR MANUFACTURING GROUP TO ENSURE YOUR COMPANY'S MANUFACTURING GUIDELINES ARE MET.

2. THERMAL VIAS IN THE LAND PATTERN OF THE EXPOSED PAD SHALL BE CONNECTED TO A SYSTEM GROUND PLANE. FAILURE TO DO SO MAY COMPROMISE THE THERMAL AND/OR FUNCTIONAL PERFORMANCE OF THE DEVICE.

Contact Information

Semtech Corporation
Power Management Products Division
200 Flynn Road, Camarillo, CA 93012
Phone: (805) 498-2111 Fax: (805) 498-3804

www.semtech.com