ZL88701/702

Dual Channel Tracking Battery Wideband VoicePort Device - ZL880 Series

Product Brief

142170 June 2012

Features

- **Next Generation ZL880 VoicePort Family with Enhanced Features and Performance**
  - Same API interface as the *VE880 Series*
  - 35% lower BOM cost than previous generation
- **Complete BORSCHT Functions for Two FXS Channels in a Single 64-Pin QFN Package**
  - **B**attery feed, **O**ver-voltage support, integrated **R**inging, line **S**upervision, **C**odec, **H**ybrid (2W/4W), and **T**est
- **Integrated Power Management**
  - Switching power supply tracks line voltage minimizing active and ringing power dissipation
  - Low Power Idle Mode with 45 mW consumption
  - Internal FET drive circuit for lower BOM count
  - Integrated real-time power monitoring tool
- **Ringing**
  - 5 REN with pin for pin compatible 100-V (ZL88701) and 150-V (ZL88702) devices
  - Up to 140-V_{PK} internal sinusoidal or trapezoidal ringing with programmable DC offset
  - Adaptive ringing for lower power
- **Worldwide Programmability**
  - Input impedance, balance impedance, gain
  - DC feed voltage and current limit
  - Ringing frequency, voltage and current limit
  - G.711 µ-law, A-law, or 16 bit linear coding
  - Call progress tone and Caller ID generation
  - Sample coefficients for more than 70 countries
- **Pin-Selectable PCM/MPI or ZSI Interfaces**
  - SPI Mode 0 and 3 support and no inter byte $\overline{CS}$ off time. Also supports legacy MPI Interface.
  - ZSI Mode for a smaller number of interface signals to the host and less expensive isolation
- **VoicePath SDK and VP-API-II Software Available to Implement FXS Functions**
- **VeriVoice Software Suites Available for Manufacturing and Subscriber Loop Testing**
  - Utilizes integrated test tool box

Ordering Information

Device OPN [1]	Device Type	Package	Packing
ZL88701LDF1	100V-Tracker	64-pin QFN (9x9)	Tape & Reel
ZL88701LDG1	100V-Tracker	64-pin QFN (9x9)	Tray
ZL88702LDF1	150V-Tracker	64-pin QFN (9x9)	Tape & Reel
ZL88702LDG1	150V-Tracker	64-pin QFN (9x9)	Tray

1. *The Green package meets RoHS Directive 2002/95/EC of the European Council to minimize the environmental impact of electrical equipment.*

Applications

- **DSL Residential Gateways and Integrated Access Devices (IADs)**
- **Cable eMTAs**
- **PON Single Family Units (SFUs)**
- **Fiber to the Premise/Home/Building (FTTx) Multiple Dwelling Units (MDUs)**

Description

The Microsemi® ZL88701/702 Dual Channel Tracking Battery Wideband VoicePort Device provides complete BORSCHT functions for two telephone line FXS ports. This device is part of the new *ZL880 Series* featuring enhanced functionality, lower BOM cost, and greater power efficiency, while maintaining software compatibility with the industry leading *VE880 Series*.

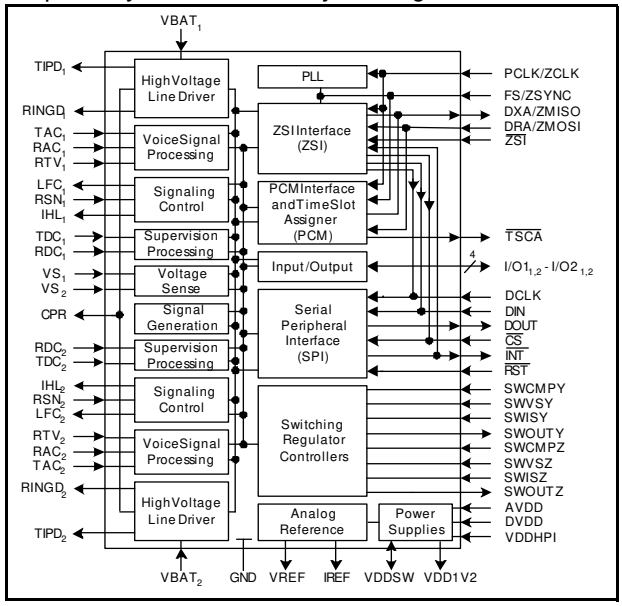

VoicePort Device Block Diagram

Zarlink Semiconductor, Inc. was acquired by Microsemi Corporation in October 2011.

Downloaded from Arrow.com.

Selected Electrical Specifications

Description	Symbol	Test Condition	Min.	Typ.	Max.	Unit
Ambient Temperature, under Bias	T_A		-40°C		+85	°C
Digital and Analog Supply Voltages	DVDD,AVDD		3.135	3.3	3.465	V_{DC}
Host Port Interface Supply Voltage	VDDHPI		1.71	3.3	DVDD	V_{DC}
Battery Voltages						
For the ZL88701	$VBAT_{1,2}$		-12	-90	-105	V_{DC}
For the ZL88702			-12	-130	-150	
Line Current	I_{LA}		18	26	49	mA
Ringing Voltage						
For the ZL88701	VRING	Flyback Switcher into 5 REN (Tracking)			65	V_{RMS}
For the ZL88702					99	
Two-Wire Return Loss	R_L	200 to 3400 Hz		30		dB
Longitudinal Balance		1 kHz		58		dB
Device Power Consumption (Per Channel)	P_D					mW
Disconnect		Switcher on, but no DC feed to line		23		
Low Power Idle (On-Hook)		VBAT = -52 V_{DC}		43		
Idle (On-Hook)				85		
Talk (Off-Hook)		300 Ω, ILA = 25mA		435		
Ringing		65 V_{RMS} into 3 REN (Tracking)		480		
Maximum Device Power Dissipation Capability, Continuous	$P_{D(max)}$	T_A = 85°C		2.1		W
Junction to Ambient Thermal Resistance	θ_{JA}			26		°C/W

Note: Refer to the *ZL88701/702 Data Sheet* for test circuits and additional details

Device Pinout

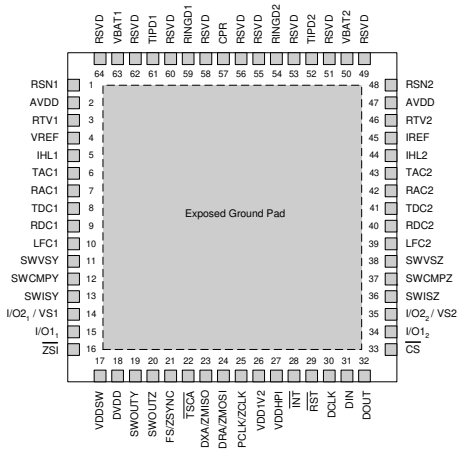

Package Drawings

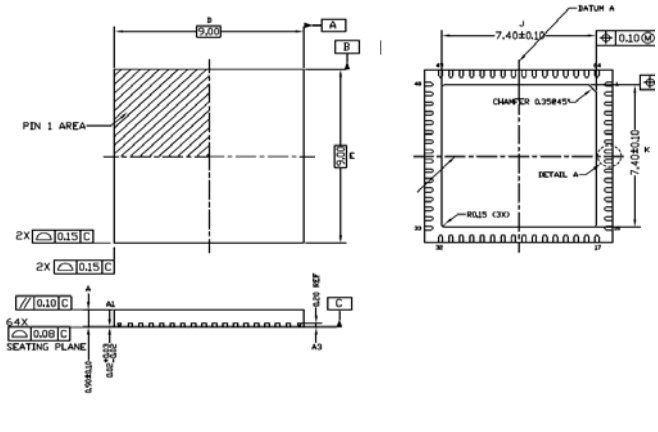

Related Collateral

- *ZL88701/702 Dual Channel Tracking Battery Wideband VoicePort Device - ZL880 Series Data Sheet*, Document ID# 141606
- *ZL880 VP-API-II Reference Guide*, Document ID#: 143271

© Copyright 2012 Microsemi Corporation. All rights reserved

Downloaded from Arrow.com