DATE	DESCRIPTION	REV.

MOUNTING PAD LAYOUT

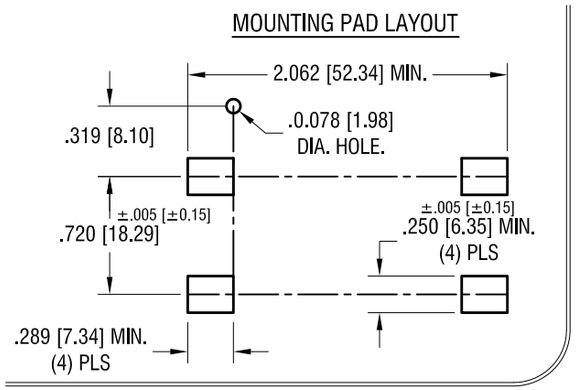

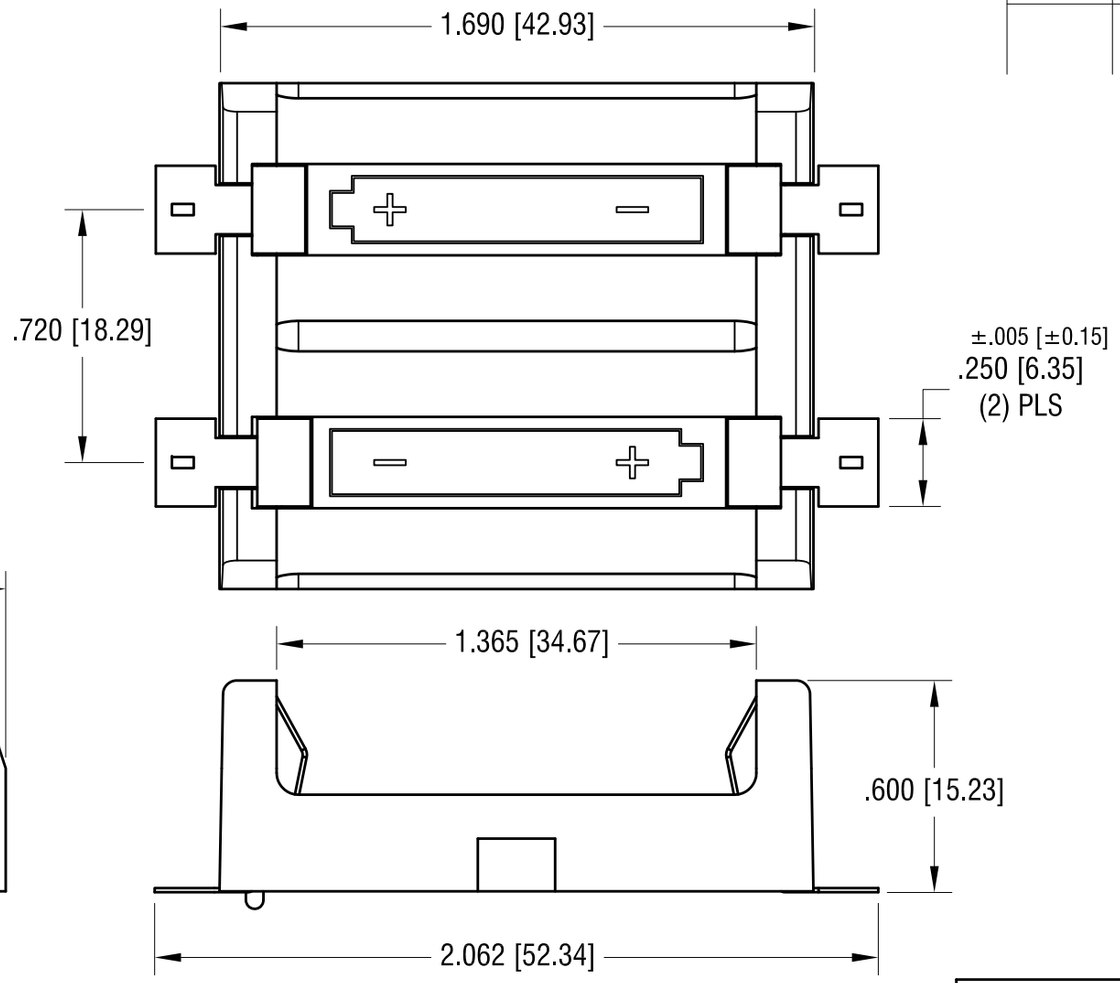

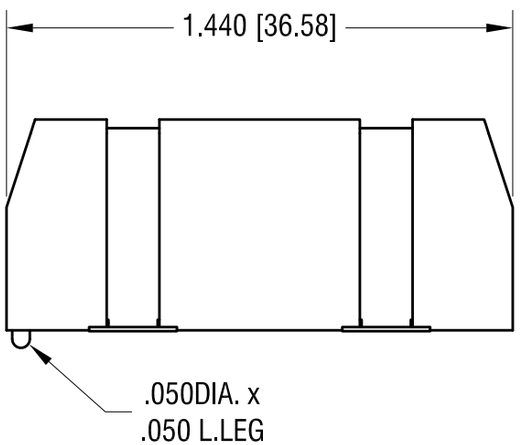

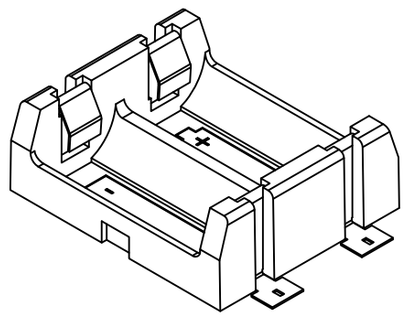

ACTUAL SIZE

NOTE:

1. BASE:
   MAT'L: HEAT RESISTANCE NYLON (UL94V-0)
   STANYL 46 OR EQUIVALENT
2. CONTACT:
   MAT'L: .012 [0.30] THK STAINLESS STEEL
   FINISH: GOLD FLASH, OVER NICKEL PLATE.
3. MSL PACKAGING:
   PART SUPPLIED ON TRAY, 25 PCS PER TRAY,
   100 PCS PER BAG.

THIS DOCUMENT IS THE PROPERTY OF KEYSTONE ELECTRONICS CORP. AND SHALL NOT BE REPRODUCED, DISTRIBUTED OR USED AS A BASIS FOR MANUFACTURE WITHOUT PRIOR WRITTEN PERMISSION FROM KEYSTONE ELECTRONICS CORP.

KEYSTONE ELECTRONICS CORP.

www.keyelco.com • ASTORIA, N.Y. 11105-2017 • Tel (718) 956-8900

PART NAME: SM BATTERY HOLDER, (2) 2/3A		
MATERIAL: AS NOTED		
FINISH: AS NOTED	DRN BY: NT	DATE: 1.05.15
	APP'D: RH	SCALE: 2X
TOLERANCES: INCH [MM]; DECIMAL ± .010 [±]; ANGULAR ± 1°; UNLESS OTHERWISE SPECIFIED	CODE: C	DWG NO.: 1100