SN54150, SN54151A, SN54LS151, SN54S151, SN74150, SN74151A, SN74LS151, SN74S151 DATA SELECTORS/MULTIPLEXERS

DECEMBER 1972—REVISED MARCH 1988

- '150 Selects One-of-Sixteen Data Sources
- Others Select One-of-Eight Data Sources
- All Perform Parallel-to-Serial Conversion
- All Permit Multiplexing from N Lines to One Line
- Also For Use as Boolean Function Generator
- Input-Clamping Diodes Simplify System Design
- Fully Compatible with Most TTL Circuits

TYPE	TYPICAL AVERAGE PROPAGATION DELAY TIME DATA INPUT TO W OUTPUT	TYPICAL POWER DISSIPATION
'150	13 ns	200 mW
'151A	8 ns	145 mW
'LS151	13 ns	30 mW
'S151	4.5 ns	225 mW

description

These monolithic data selectors/multiplexers contain full on-chip binary decoding to select the desired data source. The '150 selects one-of-sixteen data sources; the '151A, 'LS151, and 'S151 select one-of-eight data sources. The '150, '151A, 'LS151, and 'S151 have a strobe input which must be at a low logic level to enable these devices. A high level at the strobe forces the W output high, and the Y output (as applicable) low.

The '150 has only an inverted W output; the '151A, 'LS151, and 'S151 feature complementary W and Y outputs.

The '151A and '152A incorporate address buffers that have symmetrical propagation delay times through the complementary paths. This reduces the possibility of transients occurring at the output(s) due to changes made at the select inputs, even when the '151A outputs are enabled (i.e., strobe low).

SN54150 . . . J OR W PACKAGE
SN74150 . . . N PACKAGE
(TOP VIEW)

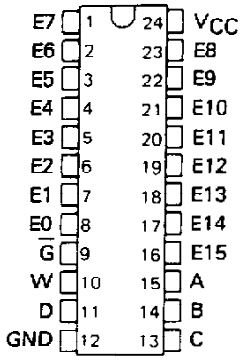

SN54151A, SN54LS151, SN54S151 . . . J OR W PACKAGE
SN74151A . . . N PACKAGE
SN74LS151, SN74S151 . . . D OR N PACKAGE
(TOP VIEW)

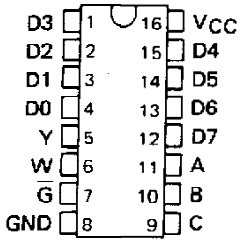

SN54LS151, SN54S151 . . . FK PACKAGE
(TOP VIEW)

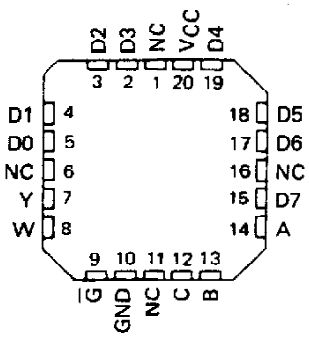

NC - No internal connection

PRODUCTION DATA documents contain information current as of publication date. Products conform to specifications per the terms of Texas Instruments standard warranty. Production processing does not necessarily include testing of all parameters.

logic symbols†

'150

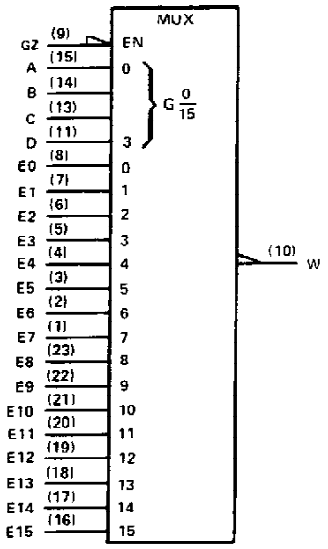

'151A, 'LS151, 'S151

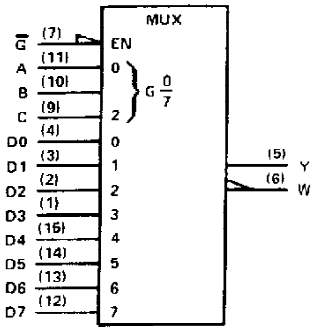

†These symbols are in accordance with ANSI/IEEE Std. 91-1984 and IEC Publication 617-12.
Pin numbers shown are D, J, N, and W packages.

'150

FUNCTION TABLE

INPUTS					OUTPUT
SELECT				STROBE	W
D	C	B	A	$\overline{G}$	
X	X	X	X	H	H
L	L	L	L	L	$\overline{E0}$
L	L	L	H	L	$\overline{E1}$
L	L	H	L	L	$\overline{E2}$
L	L	H	H	L	$\overline{E3}$
L	H	L	L	L	$\overline{E4}$
L	H	L	H	L	$\overline{E5}$
L	H	H	L	L	$\overline{E6}$
L	H	H	H	L	$\overline{E7}$
H	L	L	L	L	$\overline{E8}$
H	L	L	H	L	$\overline{E9}$
H	L	H	L	L	$\overline{E10}$
H	L	H	H	L	$\overline{E11}$
H	H	L	L	L	$\overline{E12}$
H	H	L	H	L	$\overline{E13}$
H	H	H	L	L	$\overline{E14}$
H	H	H	H	L	$\overline{E15}$

'151A, 'LS151, 'S151

FUNCTION TABLE

INPUTS				OUTPUTS	
SELECT			STROBE	Y	W
C	B	A	$\overline{G}$		
X	X	X	H	L	H
L	L	L	L	D0	$\overline{D0}$
L	L	H	L	D1	$\overline{D1}$
L	H	L	L	D2	$\overline{D2}$
L	H	H	L	D3	$\overline{D3}$
H	L	L	L	D4	$\overline{D4}$
H	L	H	L	D5	$\overline{D5}$
H	H	L	L	D6	$\overline{D6}$
H	H	H	L	D7	$\overline{D7}$

H = high level, L = low level, X = irrelevant
$\overline{E0}$, $\overline{E1}$ . . . $\overline{E15}$ = the complement of the level of the respective E input
D0, D1 . . . D7 = the level of the D respective input

schematics of inputs and outputs

EQUIVALENT OF EACH INPUT OF '150

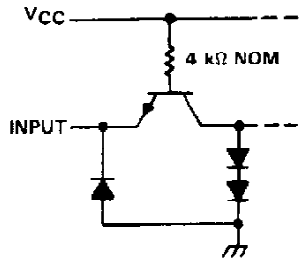

EQUIVALENT OF EACH INPUT OF '151A

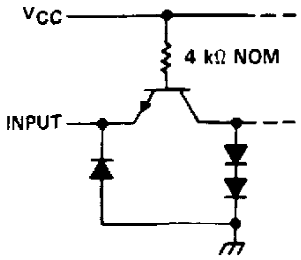

EQUIVALENT OF EACH INPUT OF 'LS151

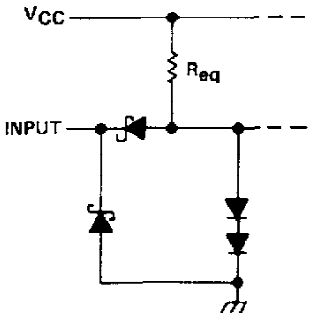

Data select and strobe R_{eq} = 20 kΩ NOM
Data inputs R_{eq} = 17 kΩ NOM

EQUIVALENT OF EACH INPUT OF 'S151

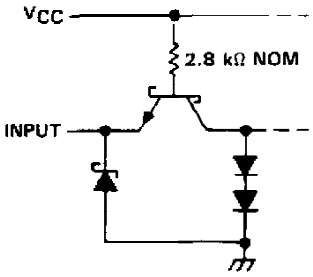

TYPICAL OF ALL OUTPUTS OF '150, '151A

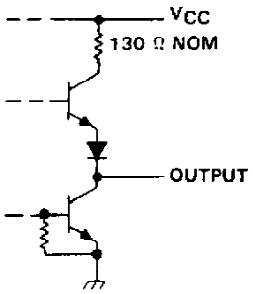

TYPICAL OF ALL OUTPUTS OF 'LS151

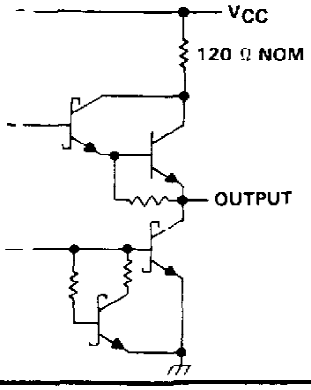

TYPICAL OF ALL OUTPUTS OF 'S151

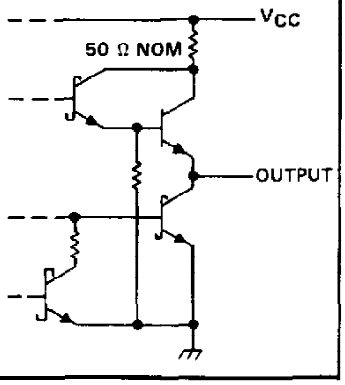

recommended operating conditions

	SN54'			SN74'			UNIT
	MIN	NOM	MAX	MIN	NOM	MAX	
Supply voltage, V_{CC}	4.5	5	5.5	4.75	5	5.25	V
High-level output current, I_{OH}			−800			−800	μA
Low-level output current, I_{OL}			16			16	mA
Operating free-air temperature, T_A	−55		125	0		70	°C

electrical characteristics over recommended operating free-air temperature range (unless otherwise noted)

PARAMETER		TEST CONDITIONS†		'150			'151A			UNIT
				MIN	TYP‡	MAX	MIN	TYP‡	MAX	
V_{IH}	High-level input voltage			2			2			V
V_{IL}	Low-level input voltage					0.8			0.8	V
V_{IK}	Input clamp voltage	V_{CC} = MIN, I_I = −8 mA				−1.5			−1.5	V
V_{OH}	High-level output voltage	V_{CC} = MIN, V_{IH} = 2 V, V_{IL} = 0.8 V, I_{OH} = −800 μA		2.4	3.4		2.4	3.4		V
V_{OL}	Low-level output voltage	V_{CC} = MIN, V_{IH} = 2 V, V_{IL} = 0.8 V, I_{OL} = 16 mA			0.2	0.4		0.2	0.4	V
I_I	Input current at maximum input voltage	V_{CC} = MAX, V_I = 5.5 V				1			1	mA
I_{IH}	High-level input current	V_{CC} = MAX, V_I = 2.4 V				40			40	μA
I_{IL}	Low-level input current	V_{CC} = MAX, V_I = 0.4 V				−1.6			−1.6	mA
I_{OS}	Short-circuit output current§	V_{CC} = MAX	SN54'	−20		−55	−20		−55	mA
			SN74'	−18		−55	−18		−55	
I_{CC}	Supply current	V_{CC} = MAX, See Note 3			40	68		29	48	mA

† For conditions shown as MIN or MAX, use the appropriate value specified under recommended operating conditions for the applicable device type.
‡ All typical values at V_{CC} = 5 V, T_A = 25°C.
§ Not more than one output of the '151A should be shorted at a time.
NOTE 3: I_{CC} is measured with the strobe and data select inputs at 4.5 V, all other inputs and outputs open.

switching characteristics, V_{CC} = 5 V, T_A = 25°C

PARAMETER¶	FROM (INPUT)	TO (OUTPUT)	TEST CONDITIONS	'150			'151A			UNIT
				MIN	TYP	MAX	MIN	TYP	MAX	
t_{PLH}	A, B, or C (4 levels)	Y	C_L = 15 pF, R_L = 400 Ω, See Note 4					25	38	ns
t_{PHL}								25	38	
t_{PLH}	A, B, C, or D (3 levels)	W			23	35		17	26	ns
t_{PHL}					22	33		19	30	
t_{PLH}	Strobe $\overline{G}$	Y						21	33	ns
t_{PHL}								22	33	
t_{PLH}	Strobe $\overline{G}$	W			15.5	24		14	21	ns
t_{PHL}					21	30		15	23	
t_{PLH}	D0 thru D7	Y						13	20	ns
t_{PHL}								18	27	
t_{PLH}	E0 thru E15, or D0 thru D7	W			8.5	14		8	14	ns
t_{PHL}					13	20		8	14	

¶ t_{PLH} = propagation delay time, low-to-high-level output
t_{PHL} = propagation delay time, high-to-low-level output
NOTE 4: Load circuits and voltage waveforms are shown in Section 1.

recommended operating conditions

	SN54LS151			SN74LS151			UNIT
	MIN	NOM	MAX	MIN	NOM	MAX	
Supply voltage, V_{CC}	4.5	5	5.5	4.75	5	5.25	V
High-level output current, I_{OH}			−400			−400	μA
Low-level output current, I_{OL}			4			8	mA
Operating free-air temperature, T_A	−55		125	0		70	C

electrical characteristics over recommended operating free-air temperature range (unless otherwise noted)

PARAMETER		TEST CONDITIONS†		SN54LS151			SN74LS151			UNIT
				MIN	TYP‡	MAX	MIN	TYP‡	MAX	
V_{IH}	High-level input voltage			2			2			V
V_{IL}	Low-level input voltage					0.7			0.8	V
V_{IK}	Input clamp voltage	V_{CC} = MIN, I_I = −18 mA				−1.5			−1.5	V
V_{OH}	High-level output voltage	V_{CC} = MIN, V_{IH} = 2 V, V_{IL} = V_{IL}max, I_{OH} = −400 μA		2.5	3.4		2.7	3.4		V
V_{OL}	Low-level output voltage	V_{CC} = MIN, V_{IH} = 2 V, V_{IL} = V_{IL}max	I_{OL} = 4 mA		0.25	0.4		0.25	0.4	V
			I_{OL} = 8 mA					0.35	0.5	
I_I	Input current at maximum input voltage	V_{CC} = MAX, V_I = 7 V				0.1			0.1	mA
I_{IH}	High-level input current	V_{CC} = MAX, V_I = 2.7 V				20			20	μA
I_{IL}	Low-level input current	V_{CC} = MAX, V_I = 0.4 V				−0.4			−0.4	mA
I_{OS}	Short-circuit output current§	V_{CC} = MAX		−20		−100	−20		−100	mA
I_{CC}	Supply current	V_{CC} = MAX, Outputs open, All inputs at 4.5 V			6.0	10		6.0	10	mA

† For conditions shown as MIN or MAX, use the appropriate value specified under recommended operating conditions for the applicable device type.
‡ All typical values are at V_{CC} = 5 V, T_A = 25°C.
§ Not more than one output should be shorted at a time and duration of short-circuit should not exceed one second.

switching characteristics, V_{CC} = 5 V, T_A 25°C

PARAMETER¶	FROM (INPUT)	TO (OUTPUT)	TEST CONDITIONS	MIN	TYP	MAX	UNIT
t_{PLH}	A, B, or C (4 levels)	Y	C_L = 15 pF, R_L = 2 kΩ, See Note 4		27	43	ns
t_{PHL}					18	30	
t_{PLH}	A, B, or C (3 levels)	W			14	23	ns
t_{PHL}					20	32	
t_{PLH}	Strobe $\overline{G}$	Y			26	42	ns
t_{PHL}					20	32	
t_{PLH}	Strobe $\overline{G}$	W			15	24	ns
t_{PHL}					18	30	
t_{PLH}	Any D	Y			20	32	ns
t_{PHL}					16	26	
t_{PLH}	Any D	W			13	21	ns
t_{PHL}					12	20	

¶ t_{PLH} = propagation delay time, low-to-high-level output
t_{PHL} = propagation delay time, high-to-low-level output
NOTE 4: Load circuits and voltage waveforms are shown in Section 1.

recommended operating conditions

	SN54S151			SN74S151			UNIT
	MIN	NOM	MAX	MIN	NOM	MAX	
Supply voltage, V_{CC}	4.5	5	5.5	4.75	5	5.25	V
High-level output current, I_{OH}			−1			−1	mA
Low-level output current, I_{OL}			20			20	mA
Operating free-air temperature, T_A	−55		125	0		70	°C

electrical characteristics over recommended operating free-air temperature range (unless otherwise noted)

PARAMETER		TEST CONDITIONS†		MIN	TYP‡	MAX	UNIT
V_{IH}	High-level input voltage			2			V
V_{IL}	Low-level input voltage					0.8	V
V_{IK}	Input clamp voltage	V_{CC} = MIN, I_I = −18 mA				−1.2	V
V_{OH}	High-level output voltage	V_{CC} = MIN, V_{IH} = 2 V, V_{IL} = 0.8 V, I_{OH} = −1 mA	SN54S151	2.5	3.4		V
			SN74S151	2.7	3.4		
V_{OL}	Low-level output voltage	V_{CC} = MIN, V_{IH} = 2 V, V_{IL} = 0.8 V, I_{OL} = 20 mA				0.5	V
I_I	Input current at maximum input voltage	V_{CC} = MAX, V_I = 5.5 V				1	mA
I_{IH}	High-level input current	V_{CC} = MAX, V_I = 2.7 V				50	μA
I_{IL}	Low-level input current	V_{CC} = MAX, V_I = 0.5 V				−2	mA
I_{OS}	Short-circuit output current§	V_{CC} = MAX		−40		−100	mA
I_{CC}	Supply current	V_{CC} = MAX, All inputs at 4.5 V, All outputs open			45	70	mA

†For conditions shown as MIN or MAX, use the appropriate value specified under recommended operating conditions for the applicable device type.
‡All typical values are at V_{CC} = 5 V, T_A = 25°C.
§Not more than one output should be shorted at a time, and duration of the short-circuit should not exceed one second.

switching characteristics, V_{CC} = 5 V, T_A 25°C

PARAMETER¶	FROM (INPUT)	TO (OUTPUT)	TEST CONDITIONS	MIN	TYP	MAX	UNIT
t_{PLH}	A, B, or C (4 levels)	Y	C_L = 15 pF, R_L = 280 kΩ, See Note 4		12	18	ns
t_{PHL}					12	18	
t_{PLH}	A, B, or C (3 levels)	W			10	15	ns
t_{PHL}					9	13.5	
t_{PLH}	Any D	Y			8	12	ns
t_{PHL}					8	12	
t_{PLH}	Any D	W			4.5	7	ns
t_{PHL}					4.5	7	
t_{PLH}	Strobe $\overline{G}$	Y			11	16.5	ns
t_{PHL}					12	18	
t_{PLH}	Strobe $\overline{G}$	W			9	13	ns
t_{PHL}					8.5	12	

¶t_{PLH} = propagation delay time, low-to-high-level output
t_{PHL} = propagation delay time, high-to-low-level output
NOTE 4: Load circuits and voltage waveforms are shown in Section 1.

PACKAGING INFORMATION

Orderable part number	Status (1)	Material type (2)	Package | Pins	Package qty | Carrier	RoHS (3)	Lead finish/ Ball material (4)	MSL rating/ Peak reflow (5)	Op temp (°C)	Part marking (6)
76010012A	Active	Production	LCCC (FK) | 20	55 | TUBE	No	SNPB	N/A for Pkg Type	-55 to 125	76010012A SNJ54LS 151FK
7601001EA	Active	Production	CDIP (J) | 16	25 | TUBE	No	SNPB	N/A for Pkg Type	-55 to 125	7601001EA SNJ54LS151J
7601001EA	Active	Production	CDIP (J) | 16	25 | TUBE	No	SNPB	N/A for Pkg Type	-55 to 125	7601001EA SNJ54LS151J
JM38510/07901BEA	Active	Production	CDIP (J) | 16	25 | TUBE	No	SNPB	N/A for Pkg Type	-55 to 125	JM38510/ 07901BEA
JM38510/07901BEA.A	Active	Production	CDIP (J) | 16	25 | TUBE	No	SNPB	N/A for Pkg Type	-55 to 125	JM38510/ 07901BEA
JM38510/07901BFA	Active	Production	CFP (W) | 16	25 | TUBE	No	SNPB	N/A for Pkg Type	-55 to 125	JM38510/ 07901BFA
JM38510/07901BFA.A	Active	Production	CFP (W) | 16	25 | TUBE	No	SNPB	N/A for Pkg Type	-55 to 125	JM38510/ 07901BFA
JM38510/30901B2A	Active	Production	LCCC (FK) | 20	55 | TUBE	No	SNPB	N/A for Pkg Type	-55 to 125	JM38510/ 30901B2A
JM38510/30901B2A	Active	Production	LCCC (FK) | 20	55 | TUBE	No	SNPB	N/A for Pkg Type	-55 to 125	JM38510/ 30901B2A
JM38510/30901B2A.A	Active	Production	LCCC (FK) | 20	55 | TUBE	No	SNPB	N/A for Pkg Type	-55 to 125	JM38510/ 30901B2A
JM38510/30901B2A.A	Active	Production	LCCC (FK) | 20	55 | TUBE	No	SNPB	N/A for Pkg Type	-55 to 125	JM38510/ 30901B2A
JM38510/30901BEA	Active	Production	CDIP (J) | 16	25 | TUBE	No	SNPB	N/A for Pkg Type	-55 to 125	JM38510/ 30901BEA
JM38510/30901BEA	Active	Production	CDIP (J) | 16	25 | TUBE	No	SNPB	N/A for Pkg Type	-55 to 125	JM38510/ 30901BEA
JM38510/30901BEA.A	Active	Production	CDIP (J) | 16	25 | TUBE	No	SNPB	N/A for Pkg Type	-55 to 125	JM38510/ 30901BEA
JM38510/30901BEA.A	Active	Production	CDIP (J) | 16	25 | TUBE	No	SNPB	N/A for Pkg Type	-55 to 125	JM38510/ 30901BEA
JM38510/30901BFA	Active	Production	CFP (W) | 16	25 | TUBE	No	SNPB	N/A for Pkg Type	-55 to 125	JM38510/ 30901BFA

Orderable part number	Status (1)	Material type (2)	Package | Pins	Package qty | Carrier	RoHS (3)	Lead finish/ Ball material (4)	MSL rating/ Peak reflow (5)	Op temp (°C)	Part marking (6)
JM38510/30901BFA	Active	Production	CFP (W) | 16	25 | TUBE	No	SNPB	N/A for Pkg Type	-55 to 125	JM38510/ 30901BFA
JM38510/30901BFA.A	Active	Production	CFP (W) | 16	25 | TUBE	No	SNPB	N/A for Pkg Type	-55 to 125	JM38510/ 30901BFA
JM38510/30901BFA.A	Active	Production	CFP (W) | 16	25 | TUBE	No	SNPB	N/A for Pkg Type	-55 to 125	JM38510/ 30901BFA
M38510/07901BEA	Active	Production	CDIP (J) | 16	25 | TUBE	No	SNPB	N/A for Pkg Type	-55 to 125	JM38510/ 07901BEA
M38510/07901BFA	Active	Production	CFP (W) | 16	25 | TUBE	No	SNPB	N/A for Pkg Type	-55 to 125	JM38510/ 07901BFA
M38510/30901B2A	Active	Production	LCCC (FK) | 20	55 | TUBE	No	SNPB	N/A for Pkg Type	-55 to 125	JM38510/ 30901B2A
M38510/30901B2A	Active	Production	LCCC (FK) | 20	55 | TUBE	No	SNPB	N/A for Pkg Type	-55 to 125	JM38510/ 30901B2A
M38510/30901BEA	Active	Production	CDIP (J) | 16	25 | TUBE	No	SNPB	N/A for Pkg Type	-55 to 125	JM38510/ 30901BEA
M38510/30901BEA	Active	Production	CDIP (J) | 16	25 | TUBE	No	SNPB	N/A for Pkg Type	-55 to 125	JM38510/ 30901BEA
M38510/30901BFA	Active	Production	CFP (W) | 16	25 | TUBE	No	SNPB	N/A for Pkg Type	-55 to 125	JM38510/ 30901BFA
M38510/30901BFA	Active	Production	CFP (W) | 16	25 | TUBE	No	SNPB	N/A for Pkg Type	-55 to 125	JM38510/ 30901BFA
SN54LS151J	Active	Production	CDIP (J) | 16	25 | TUBE	No	SNPB	N/A for Pkg Type	-55 to 125	SN54LS151J
SN54LS151J	Active	Production	CDIP (J) | 16	25 | TUBE	No	SNPB	N/A for Pkg Type	-55 to 125	SN54LS151J
SN54LS151J.A	Active	Production	CDIP (J) | 16	25 | TUBE	No	SNPB	N/A for Pkg Type	-55 to 125	SN54LS151J
SN54LS151J.A	Active	Production	CDIP (J) | 16	25 | TUBE	No	SNPB	N/A for Pkg Type	-55 to 125	SN54LS151J
SN54S151J	Active	Production	CDIP (J) | 16	25 | TUBE	No	SNPB	N/A for Pkg Type	-55 to 125	SN54S151J
SN54S151J.A	Active	Production	CDIP (J) | 16	25 | TUBE	No	SNPB	N/A for Pkg Type	-55 to 125	SN54S151J
SN74LS151D	Obsolete	Production	SOIC (D) | 16	-	-	Call TI	Call TI	0 to 70	LS151
SN74LS151D	Obsolete	Production	SOIC (D) | 16	-	-	Call TI	Call TI	0 to 70	LS151
SN74LS151DR	Active	Production	SOIC (D) | 16	2500 | LARGE T&R	Yes	NIPDAU	Level-1-260C-UNLIM	0 to 70	LS151
SN74LS151DR	Active	Production	SOIC (D) | 16	2500 | LARGE T&R	Yes	NIPDAU	Level-1-260C-UNLIM	0 to 70	LS151
SN74LS151DR.A	Active	Production	SOIC (D) | 16	2500 | LARGE T&R	Yes	NIPDAU	Level-1-260C-UNLIM	0 to 70	LS151
SN74LS151DR.A	Active	Production	SOIC (D) | 16	2500 | LARGE T&R	Yes	NIPDAU	Level-1-260C-UNLIM	0 to 70	LS151

Orderable part number	Status (1)	Material type (2)	Package | Pins	Package qty | Carrier	RoHS (3)	Lead finish/ Ball material (4)	MSL rating/ Peak reflow (5)	Op temp (°C)	Part marking (6)
SN74LS151N	Active	Production	PDIP (N) | 16	25 | TUBE	Yes	NIPDAU	N/A for Pkg Type	0 to 70	SN74LS151N
SN74LS151N	Active	Production	PDIP (N) | 16	25 | TUBE	Yes	NIPDAU	N/A for Pkg Type	0 to 70	SN74LS151N
SN74LS151N.A	Active	Production	PDIP (N) | 16	25 | TUBE	Yes	NIPDAU	N/A for Pkg Type	0 to 70	SN74LS151N
SN74LS151N.A	Active	Production	PDIP (N) | 16	25 | TUBE	Yes	NIPDAU	N/A for Pkg Type	0 to 70	SN74LS151N
SN74LS151NE4	Active	Production	PDIP (N) | 16	25 | TUBE	Yes	NIPDAU	N/A for Pkg Type	0 to 70	SN74LS151N
SN74LS151NE4	Active	Production	PDIP (N) | 16	25 | TUBE	Yes	NIPDAU	N/A for Pkg Type	0 to 70	SN74LS151N
SN74LS151NSR	Active	Production	SOP (NS) | 16	2000 | LARGE T&R	Yes	NIPDAU	Level-1-260C-UNLIM	0 to 70	74LS151
SN74LS151NSR	Active	Production	SOP (NS) | 16	2000 | LARGE T&R	Yes	NIPDAU	Level-1-260C-UNLIM	0 to 70	74LS151
SN74LS151NSR.A	Active	Production	SOP (NS) | 16	2000 | LARGE T&R	Yes	NIPDAU	Level-1-260C-UNLIM	0 to 70	74LS151
SN74LS151NSR.A	Active	Production	SOP (NS) | 16	2000 | LARGE T&R	Yes	NIPDAU	Level-1-260C-UNLIM	0 to 70	74LS151
SNJ54LS151FK	Active	Production	LCCC (FK) | 20	55 | TUBE	No	SNPB	N/A for Pkg Type	-55 to 125	76010012A SNJ54LS 151FK
SNJ54LS151FK	Active	Production	LCCC (FK) | 20	55 | TUBE	No	SNPB	N/A for Pkg Type	-55 to 125	76010012A SNJ54LS 151FK
SNJ54LS151FK.A	Active	Production	LCCC (FK) | 20	55 | TUBE	No	SNPB	N/A for Pkg Type	-55 to 125	76010012A SNJ54LS 151FK
SNJ54LS151FK.A	Active	Production	LCCC (FK) | 20	55 | TUBE	No	SNPB	N/A for Pkg Type	-55 to 125	76010012A SNJ54LS 151FK
SNJ54LS151J	Active	Production	CDIP (J) | 16	25 | TUBE	No	SNPB	N/A for Pkg Type	-55 to 125	7601001EA SNJ54LS151J
SNJ54LS151J	Active	Production	CDIP (J) | 16	25 | TUBE	No	SNPB	N/A for Pkg Type	-55 to 125	7601001EA SNJ54LS151J
SNJ54LS151J.A	Active	Production	CDIP (J) | 16	25 | TUBE	No	SNPB	N/A for Pkg Type	-55 to 125	7601001EA SNJ54LS151J
SNJ54LS151J.A	Active	Production	CDIP (J) | 16	25 | TUBE	No	SNPB	N/A for Pkg Type	-55 to 125	7601001EA SNJ54LS151J
SNJ54S151J	Active	Production	CDIP (J) | 16	25 | TUBE	No	SNPB	N/A for Pkg Type	-55 to 125	SNJ54S151J
SNJ54S151J.A	Active	Production	CDIP (J) | 16	25 | TUBE	No	SNPB	N/A for Pkg Type	-55 to 125	SNJ54S151J
SNJ54S151W	Active	Production	CFP (W) | 16	25 | TUBE	No	SNPB	N/A for Pkg Type	-55 to 125	SNJ54S151W
SNJ54S151W.A	Active	Production	CFP (W) | 16	25 | TUBE	No	SNPB	N/A for Pkg Type	-55 to 125	SNJ54S151W

(1) **Status:** For more details on status, see our product life cycle.

(2) **Material type:** When designated, preproduction parts are prototypes/experimental devices, and are not yet approved or released for full production. Testing and final process, including without limitation quality assurance, reliability performance testing, and/or process qualification, may not yet be complete, and this item is subject to further changes or possible discontinuation. If available for ordering, purchases will be subject to an additional waiver at checkout, and are intended for early internal evaluation purposes only. These items are sold without warranties of any kind.

(3) **RoHS values:** Yes, No, RoHS Exempt. See the TI RoHS Statement for additional information and value definition.

(4) **Lead finish/Ball material:** Parts may have multiple material finish options. Finish options are separated by a vertical ruled line. Lead finish/Ball material values may wrap to two lines if the finish value exceeds the maximum column width.

(5) **MSL rating/Peak reflow:** The moisture sensitivity level ratings and peak solder (reflow) temperatures. In the event that a part has multiple moisture sensitivity ratings, only the lowest level per JEDEC standards is shown. Refer to the shipping label for the actual reflow temperature that will be used to mount the part to the printed circuit board.

(6) **Part marking:** There may be an additional marking, which relates to the logo, the lot trace code information, or the environmental category of the part.

Multiple part markings will be inside parentheses. Only one part marking contained in parentheses and separated by a "~" will appear on a part. If a line is indented then it is a continuation of the previous line and the two combined represent the entire part marking for that device.

Important Information and Disclaimer: The information provided on this page represents TI's knowledge and belief as of the date that it is provided. TI bases its knowledge and belief on information provided by third parties, and makes no representation or warranty as to the accuracy of such information. Efforts are underway to better integrate information from third parties. TI has taken and continues to take reasonable steps to provide representative and accurate information but may not have conducted destructive testing or chemical analysis on incoming materials and chemicals. TI and TI suppliers consider certain information to be proprietary, and thus CAS numbers and other limited information may not be available for release.

In no event shall TI's liability arising out of such information exceed the total purchase price of the TI part(s) at issue in this document sold by TI to Customer on an annual basis.

OTHER QUALIFIED VERSIONS OF SN54LS151, SN74LS151 :

- Catalog : SN74LS151
- Military : SN54LS151

NOTE: Qualified Version Definitions:

- Catalog - TI's standard catalog product
- Military - QML certified for Military and Defense Applications

TAPE AND REEL INFORMATION

REEL DIMENSIONS

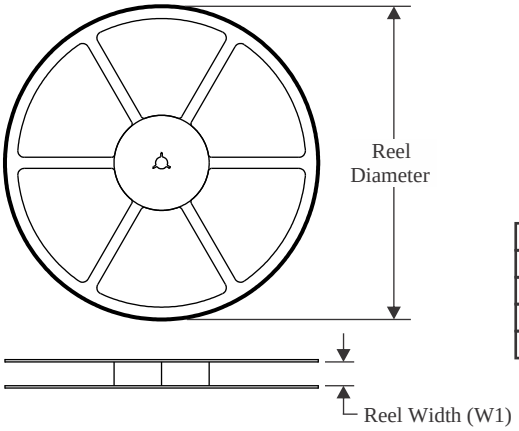

TAPE DIMENSIONS

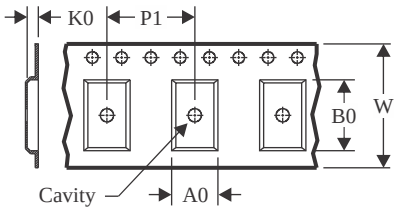

A0	Dimension designed to accommodate the component width
B0	Dimension designed to accommodate the component length
K0	Dimension designed to accommodate the component thickness
W	Overall width of the carrier tape
P1	Pitch between successive cavity centers

QUADRANT ASSIGNMENTS FOR PIN 1 ORIENTATION IN TAPE

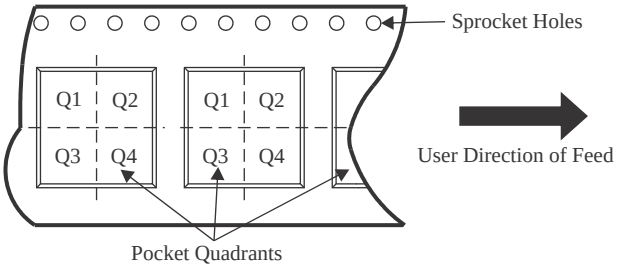

*All dimensions are nominal

Device	Package Type	Package Drawing	Pins	SPQ	Reel Diameter (mm)	Reel Width W1 (mm)	A0 (mm)	B0 (mm)	K0 (mm)	P1 (mm)	W (mm)	Pin1 Quadrant
SN74LS151DR	SOIC	D	16	2500	330.0	16.4	6.5	10.3	2.1	8.0	16.0	Q1
SN74LS151NSR	SOP	NS	16	2000	330.0	16.4	8.1	10.4	2.5	12.0	16.0	Q1

TAPE AND REEL BOX DIMENSIONS

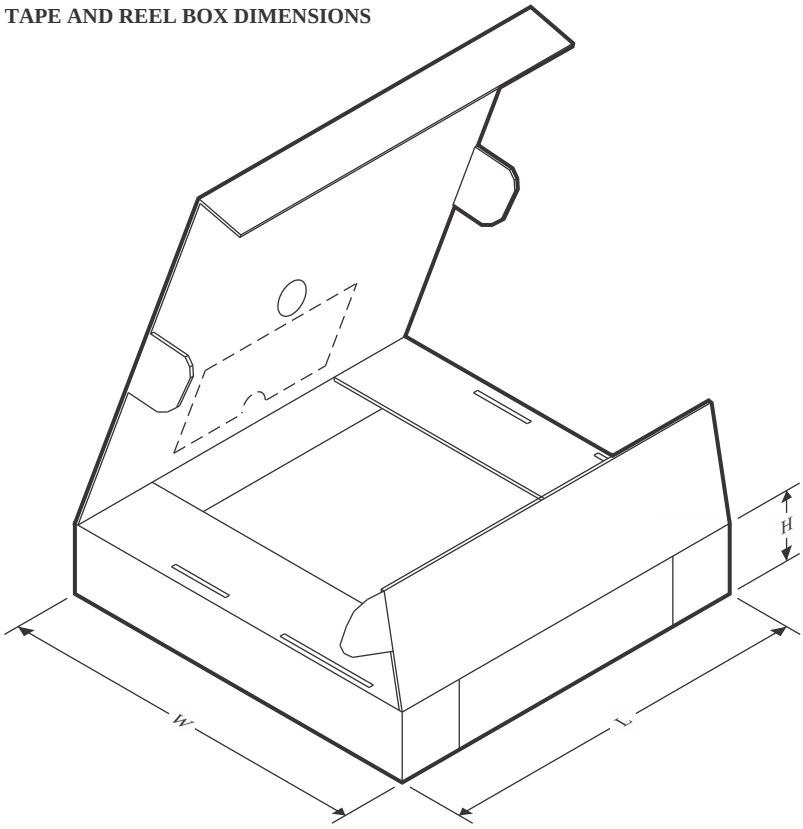

*All dimensions are nominal

Device	Package Type	Package Drawing	Pins	SPQ	Length (mm)	Width (mm)	Height (mm)
SN74LS151DR	SOIC	D	16	2500	353.0	353.0	32.0
SN74LS151NSR	SOP	NS	16	2000	353.0	353.0	32.0

TUBE

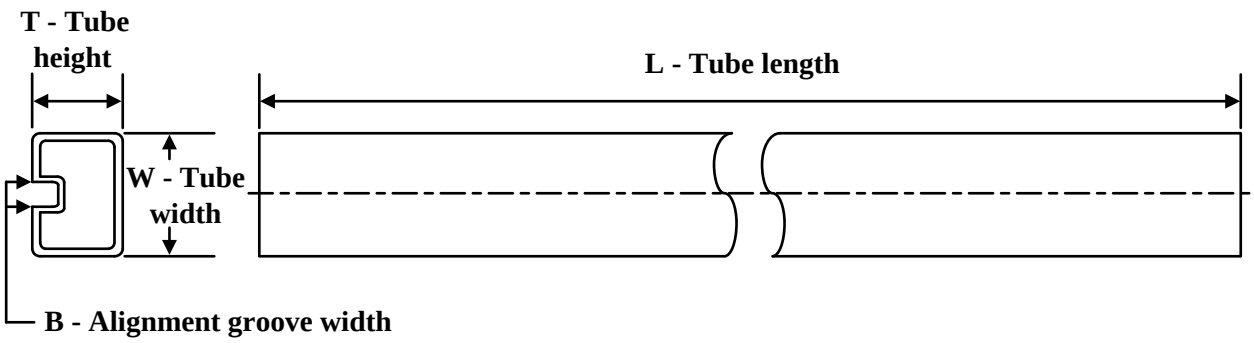

*All dimensions are nominal

Device	Package Name	Package Type	Pins	SPQ	L (mm)	W (mm)	T (µm)	B (mm)
76010012A	FK	LCCC	20	55	506.98	12.06	2030	NA
JM38510/07901BFA	W	CFP	16	25	506.98	26.16	6220	NA
JM38510/07901BFA.A	W	CFP	16	25	506.98	26.16	6220	NA
JM38510/30901B2A	FK	LCCC	20	55	506.98	12.06	2030	NA
JM38510/30901B2A.A	FK	LCCC	20	55	506.98	12.06	2030	NA
JM38510/30901BFA	W	CFP	16	25	506.98	26.16	6220	NA
JM38510/30901BFA.A	W	CFP	16	25	506.98	26.16	6220	NA
M38510/07901BFA	W	CFP	16	25	506.98	26.16	6220	NA
M38510/30901B2A	FK	LCCC	20	55	506.98	12.06	2030	NA
M38510/30901BFA	W	CFP	16	25	506.98	26.16	6220	NA
SN74LS151N	N	PDIP	16	25	506	13.97	11230	4.32
SN74LS151N	N	PDIP	16	25	506	13.97	11230	4.32
SN74LS151N.A	N	PDIP	16	25	506	13.97	11230	4.32
SN74LS151N.A	N	PDIP	16	25	506	13.97	11230	4.32
SN74LS151NE4	N	PDIP	16	25	506	13.97	11230	4.32
SN74LS151NE4	N	PDIP	16	25	506	13.97	11230	4.32
SNJ54LS151FK	FK	LCCC	20	55	506.98	12.06	2030	NA
SNJ54LS151FK.A	FK	LCCC	20	55	506.98	12.06	2030	NA

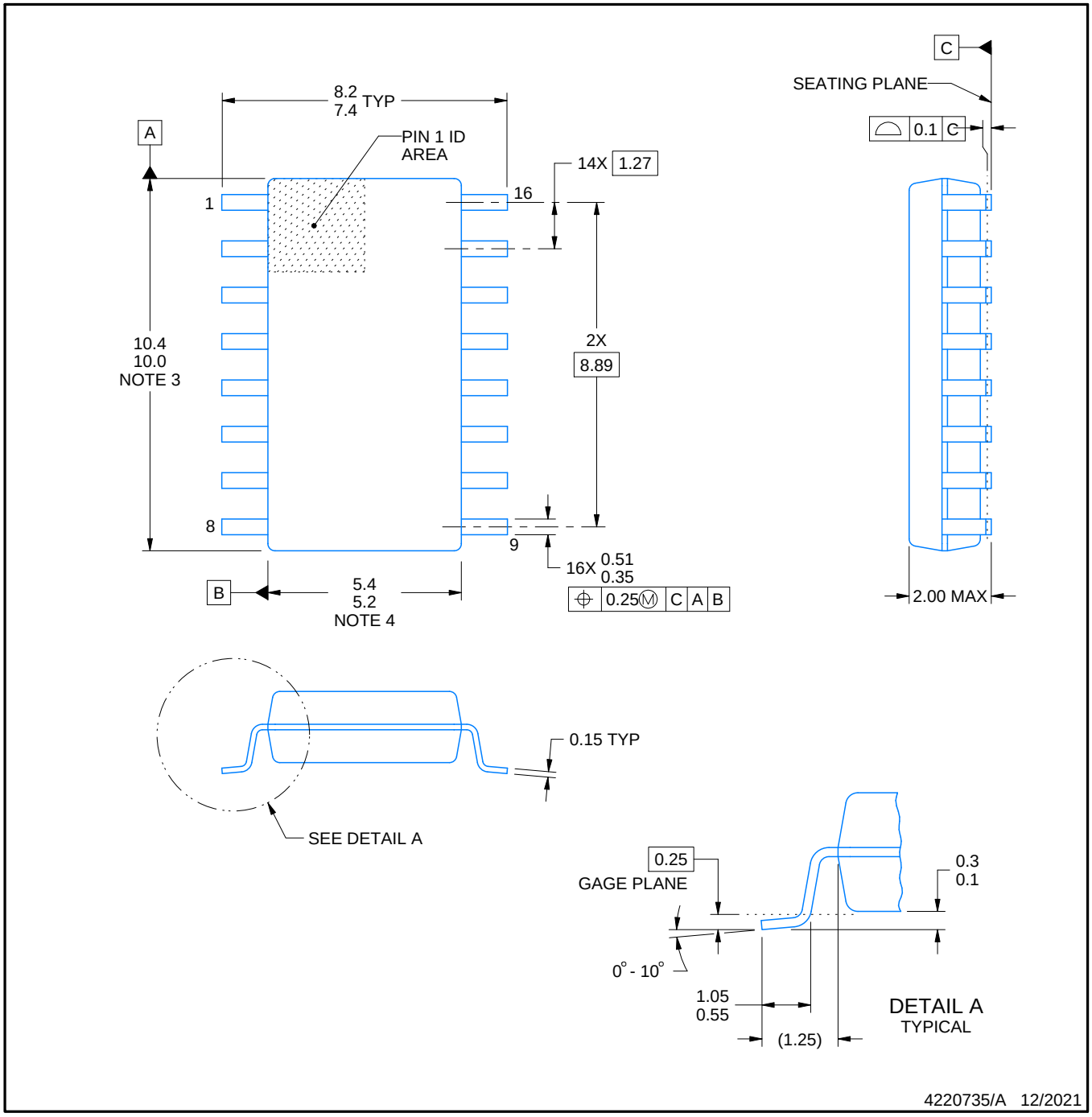

NOTES:

1. All linear dimensions are in millimeters. Dimensions in parenthesis are for reference only. Dimensioning and tolerancing per ASME Y14.5M.
2. This drawing is subject to change without notice.
3. This dimension does not include mold flash, protrusions, or gate burrs. Mold flash, protrusions, or gate burrs shall not exceed 0.15 mm, per side.
4. This dimension does not include interlead flash. Interlead flash shall not exceed 0.25 mm, per side.

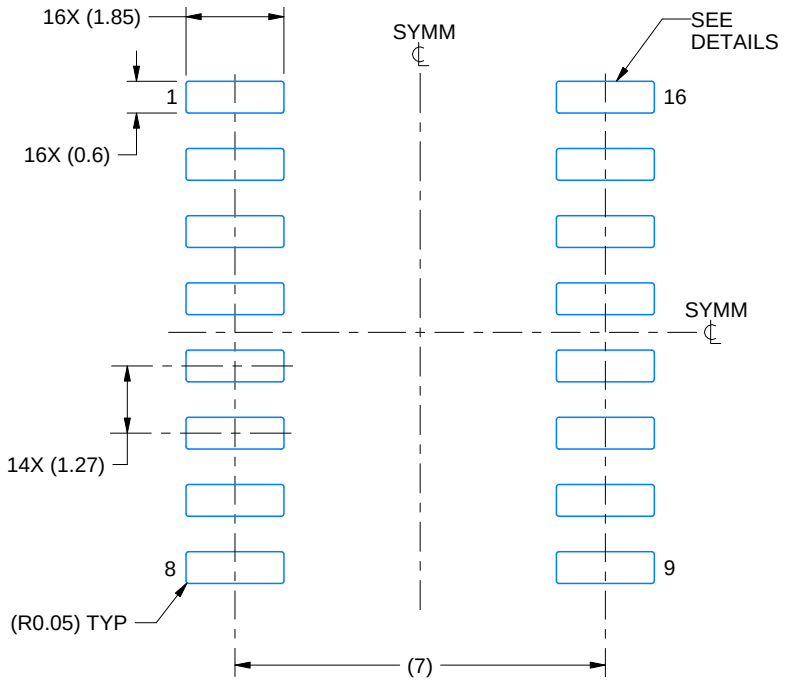

LAND PATTERN EXAMPLE
SCALE:7X

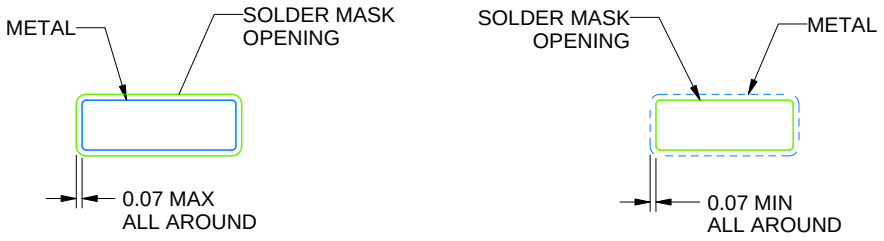

NON SOLDER MASK DEFINED

SOLDER MASK DEFINED

SOLDER MASK DETAILS

4220735/A 12/2021

NOTES: (continued)

5. Publication IPC-7351 may have alternate designs.
6. Solder mask tolerances between and around signal pads can vary based on board fabrication site.

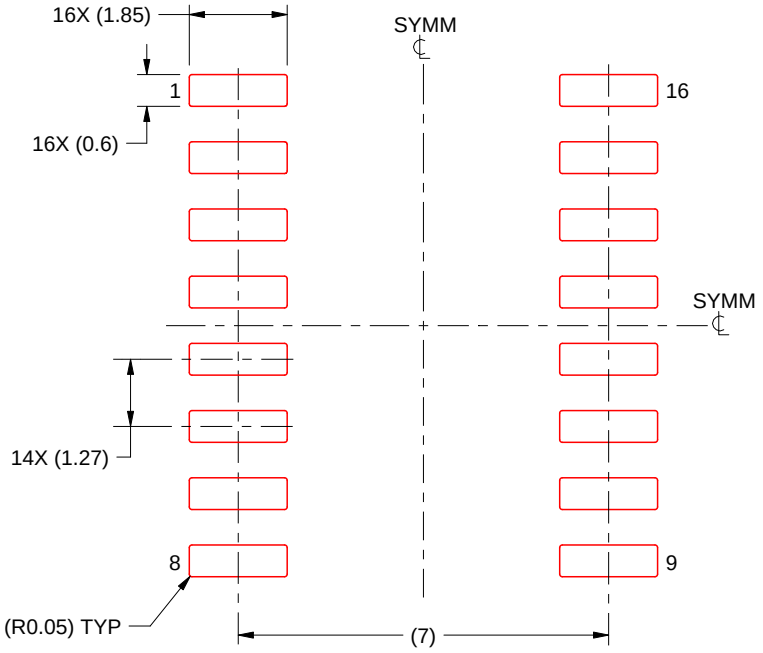

SOLDER PASTE EXAMPLE
BASED ON 0.125 mm THICK STENCIL
SCALE:7X

4220735/A 12/2021

NOTES: (continued)

7. Laser cutting apertures with trapezoidal walls and rounded corners may offer better paste release. IPC-7525 may have alternate design recommendations.
8. Board assembly site may have different recommendations for stencil design.

D (R–PDSO–G16) PLASTIC SMALL OUTLINE

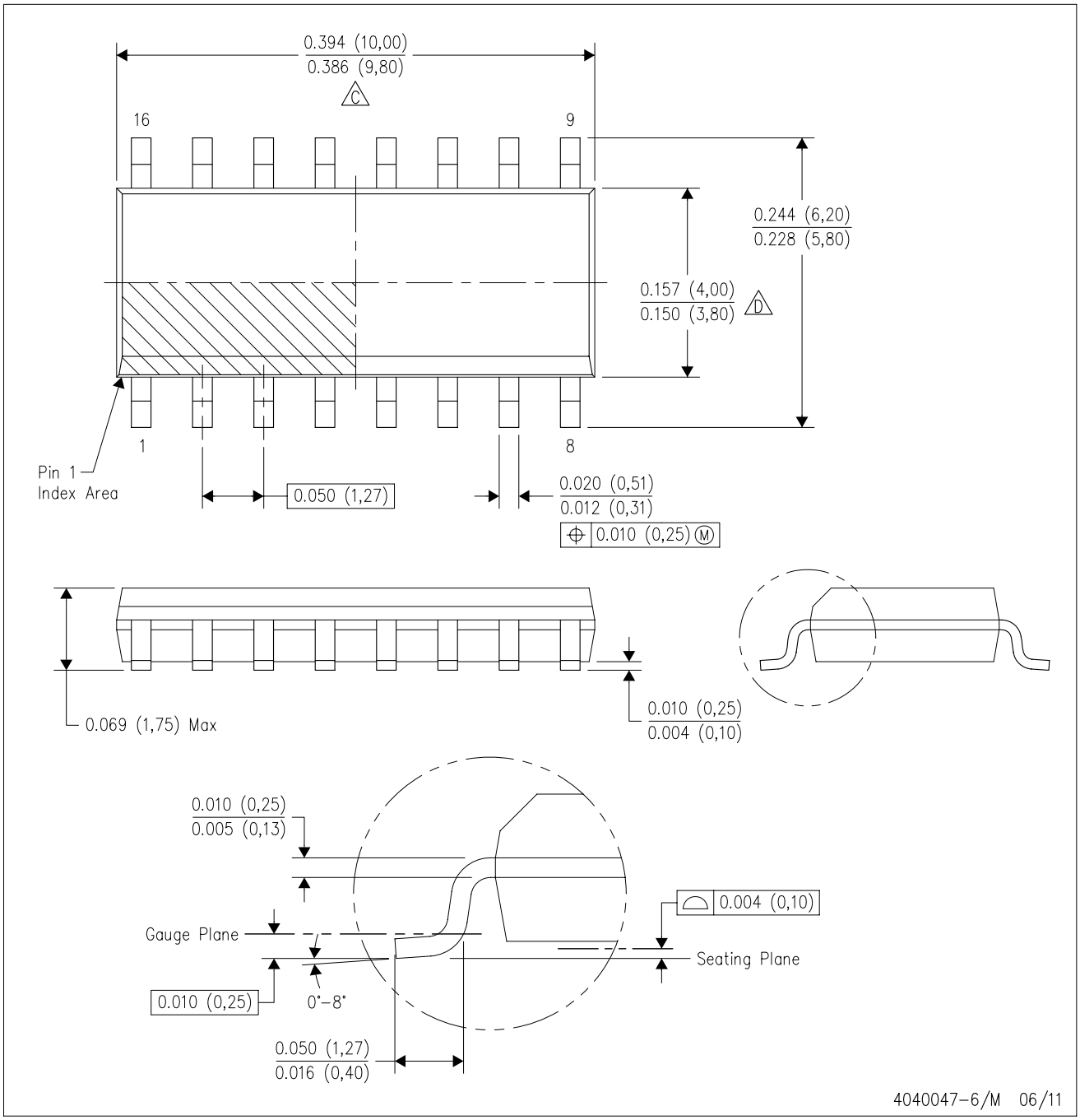

NOTES:
A. All linear dimensions are in inches (millimeters).
B. This drawing is subject to change without notice.
C. Body length does not include mold flash, protrusions, or gate burrs. Mold flash, protrusions, or gate burrs shall not exceed 0.006 (0,15) each side.
D. Body width does not include interlead flash. Interlead flash shall not exceed 0.017 (0,43) each side.
E. Reference JEDEC MS–012 variation AC.

W (R–GDFP–F16) CERAMIC DUAL FLATPACK

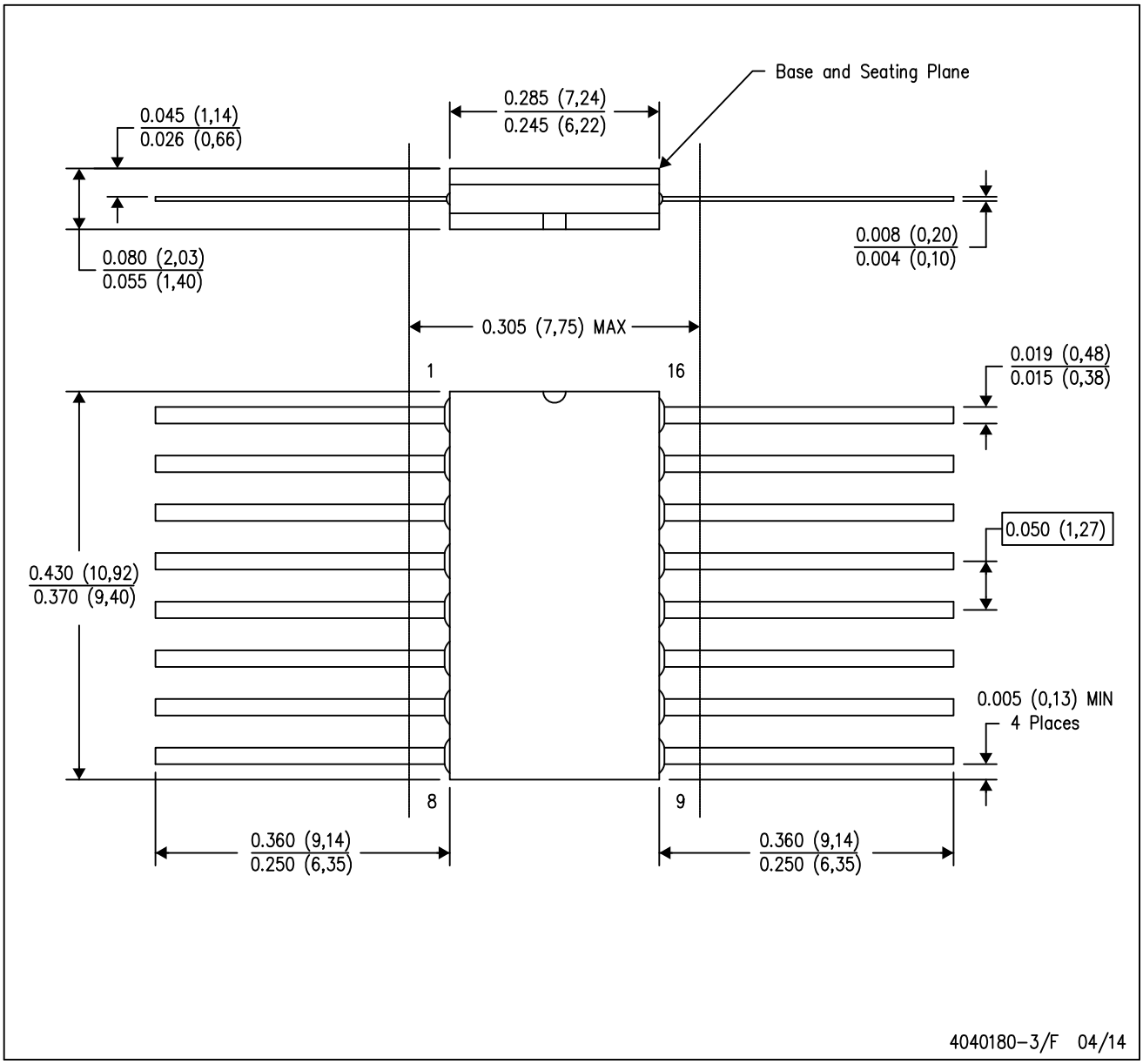

NOTES:
A. All linear dimensions are in inches (millimeters).
B. This drawing is subject to change without notice.
C. This package can be hermetically sealed with a ceramic lid using glass frit.
D. Index point is provided on cap for terminal identification only.
E. Falls within MIL STD 1835 GDFP2–F16

GENERIC PACKAGE VIEW

FK 20

LCCC - 2.03 mm max height

8.89 x 8.89, 1.27 mm pitch

LEADLESS CERAMIC CHIP CARRIER

This image is a representation of the package family, actual package may vary.
Refer to the product data sheet for package details.

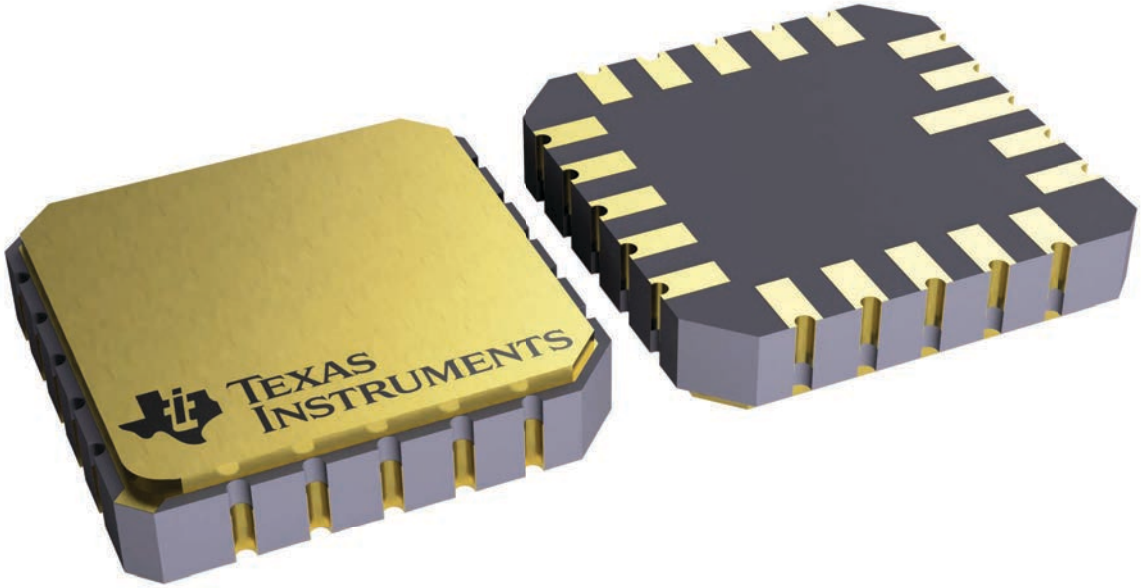

4229370VA\

J (R–GDIP–T**) CERAMIC DUAL IN–LINE PACKAGE

14 LEADS SHOWN

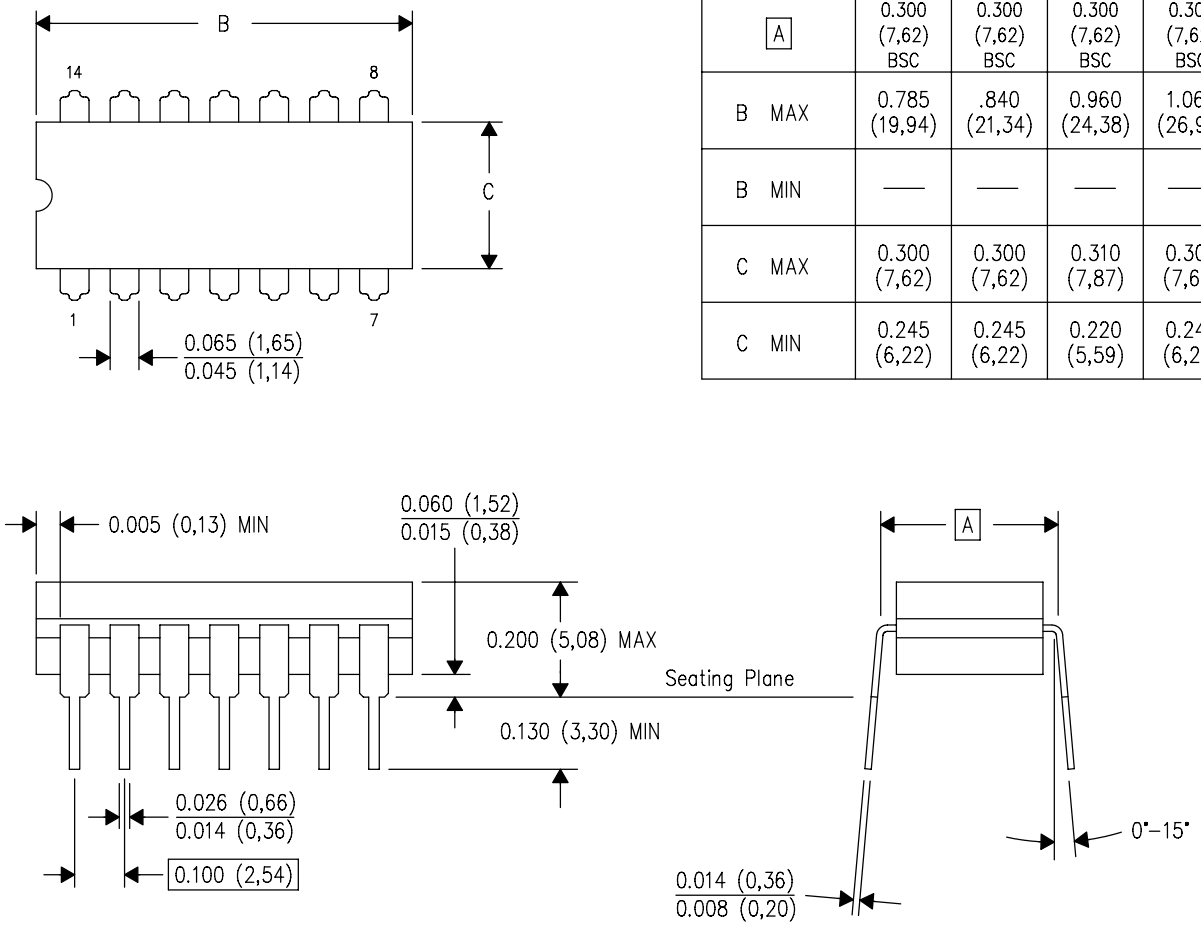

DIM \ PINS **	14	16	18	20
A	0.300 (7,62) BSC	0.300 (7,62) BSC	0.300 (7,62) BSC	0.300 (7,62) BSC
B MAX	0.785 (19,94)	.840 (21,34)	0.960 (24,38)	1.060 (26,92)
B MIN	—	—	—	—
C MAX	0.300 (7,62)	0.300 (7,62)	0.310 (7,87)	0.300 (7,62)
C MIN	0.245 (6,22)	0.245 (6,22)	0.220 (5,59)	0.245 (6,22)

4040083/F 03/03

NOTES:
- A. All linear dimensions are in inches (millimeters).
- B. This drawing is subject to change without notice.
- C. This package is hermetically sealed with a ceramic lid using glass frit.
- D. Index point is provided on cap for terminal identification only on press ceramic glass frit seal only.
- E. Falls within MIL STD 1835 GDIP1–T14, GDIP1–T16, GDIP1–T18 and GDIP1–T20.

N (R–PDIP–T**) PLASTIC DUAL–IN–LINE PACKAGE

16 PINS SHOWN

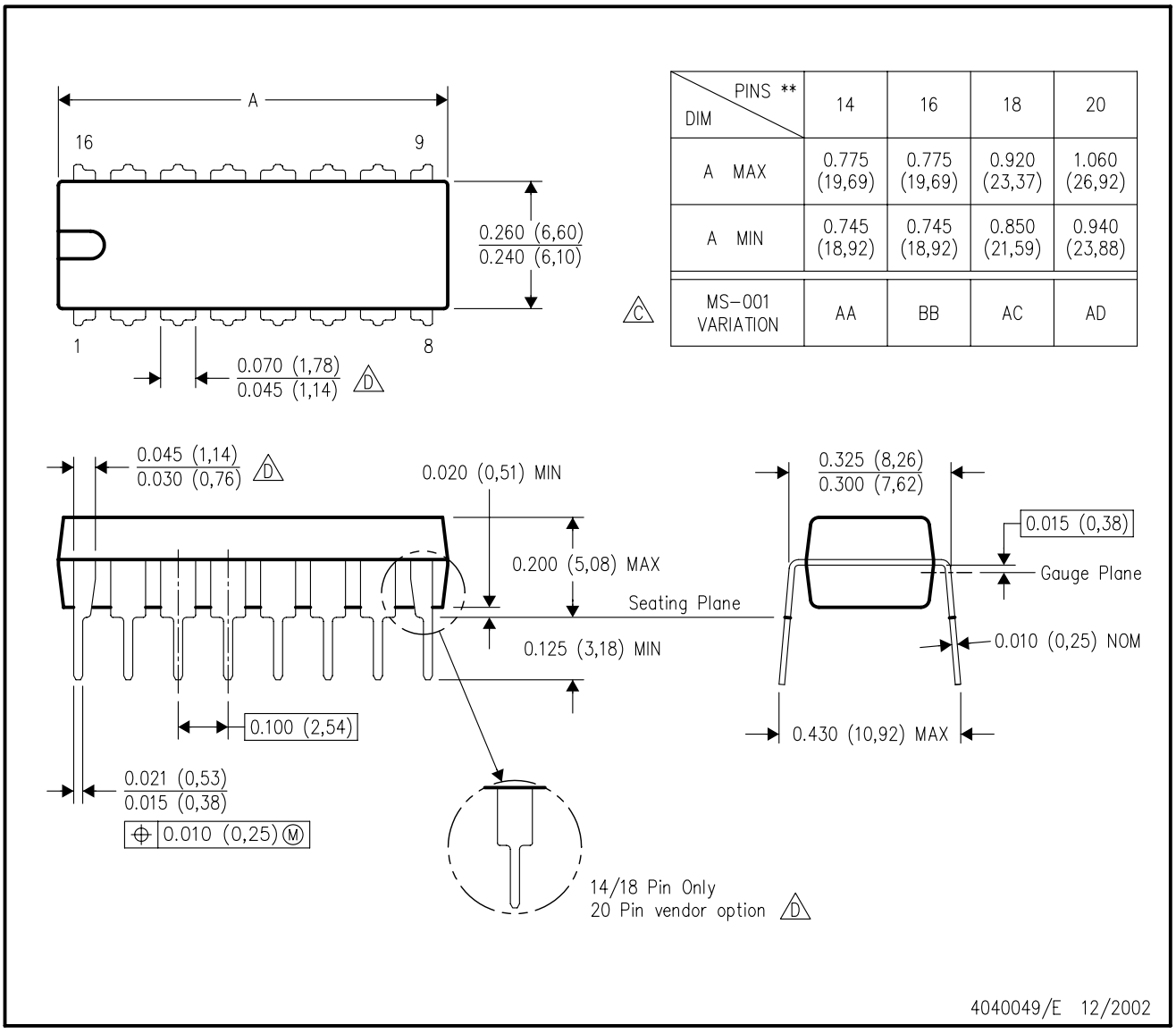

DIM \ PINS **	14	16	18	20
A MAX	0.775 (19,69)	0.775 (19,69)	0.920 (23,37)	1.060 (26,92)
A MIN	0.745 (18,92)	0.745 (18,92)	0.850 (21,59)	0.940 (23,88)
MS–001 VARIATION (C)	AA	BB	AC	AD

NOTES:
A. All linear dimensions are in inches (millimeters).
B. This drawing is subject to change without notice.
C. Falls within JEDEC MS–001, except 18 and 20 pin minimum body length (Dim A).
D. The 20 pin end lead shoulder width is a vendor option, either half or full width.

IMPORTANT NOTICE AND DISCLAIMER

TI PROVIDES TECHNICAL AND RELIABILITY DATA (INCLUDING DATASHEETS), DESIGN RESOURCES (INCLUDING REFERENCE DESIGNS), APPLICATION OR OTHER DESIGN ADVICE, WEB TOOLS, SAFETY INFORMATION, AND OTHER RESOURCES “AS IS” AND WITH ALL FAULTS, AND DISCLAIMS ALL WARRANTIES, EXPRESS AND IMPLIED, INCLUDING WITHOUT LIMITATION ANY IMPLIED WARRANTIES OF MERCHANTABILITY, FITNESS FOR A PARTICULAR PURPOSE OR NON-INFRINGEMENT OF THIRD PARTY INTELLECTUAL PROPERTY RIGHTS.

These resources are intended for skilled developers designing with TI products. You are solely responsible for (1) selecting the appropriate TI products for your application, (2) designing, validating and testing your application, and (3) ensuring your application meets applicable standards, and any other safety, security, regulatory or other requirements.

These resources are subject to change without notice. TI grants you permission to use these resources only for development of an application that uses the TI products described in the resource. Other reproduction and display of these resources is prohibited. No license is granted to any other TI intellectual property right or to any third party intellectual property right. TI disclaims responsibility for, and you fully indemnify TI and its representatives against any claims, damages, costs, losses, and liabilities arising out of your use of these resources.

TI’s products are provided subject to TI’s Terms of Sale, TI’s General Quality Guidelines, or other applicable terms available either on ti.com or provided in conjunction with such TI products. TI’s provision of these resources does not expand or otherwise alter TI’s applicable warranties or warranty disclaimers for TI products. Unless TI explicitly designates a product as custom or customer-specified, TI products are standard, catalog, general purpose devices.

TI objects to and rejects any additional or different terms you may propose.

Copyright © 2026, Texas Instruments Incorporated

Last updated 10/2025