THIS DRAWING IS UNPUBLISHED. RELEASED FOR PUBLICATION -
© COPYRIGHT 19 BY TYCO ELECTRONICS CORPORATION. ALL RIGHTS RESERVED.

LOC	DIST
FX	00

REVISIONS

P	LTR	DESCRIPTION	DATE	DWN	APVD
	O	RELEASED PER NPR 20076	12JAN2001	DWF	AME
	A	0K80-0013-01	19JAN2001	JRB	FIK

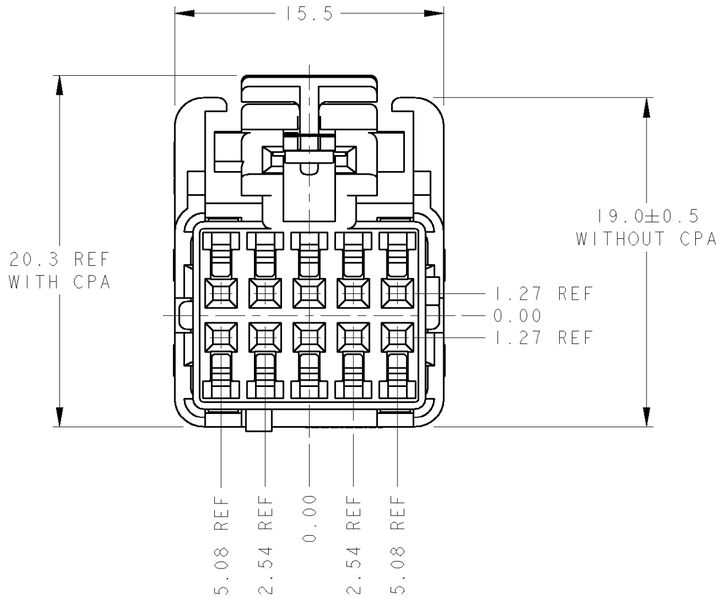

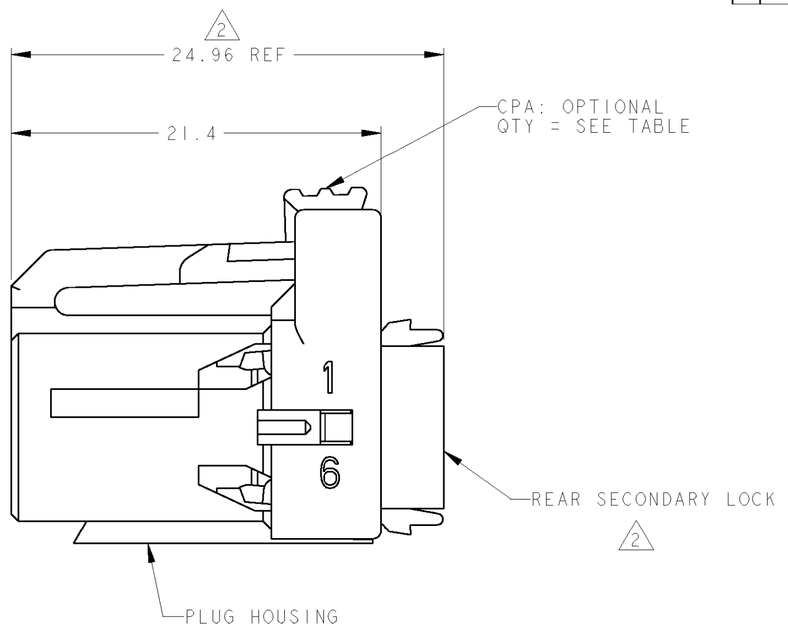

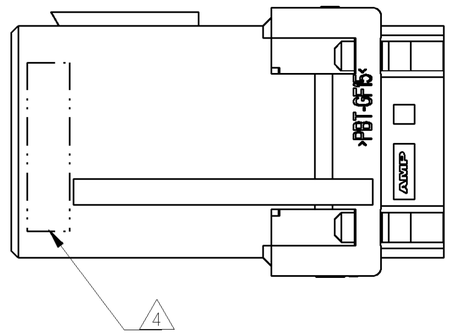

1. 638393-5 SHOWN.

2. REAR SECONDARY LOCK, SHOWN IN PRE-LATCHED POSITION.

3. PLUG HOUSING: PBT, 15% GLASS FILLED, COLOR - SEE TABLE, 25% MAX REGRIND.
   REAR SECONDARY LOCK: PBT, UNFILLED, GRAY, 25% MAX REGRIND.
   CPA: PBT, 15% GLASS FILLED, RED, 25% MAX REGRIND.

4. MARK FOUR DIGIT JULIAN DATE CODE (DDDY), LOCATED IN APPROXIMATE AREA SHOWN.

5. TERMINALS SOLD SEPARATELY, SEE AMP RECOMMENDED P/N 1326028 (GOLD) OR 63855I (TIN) FOR TERMINATION AND REELING OPTIONS.

6. THIS PRODUCT HAS A MINIMUM MISMATING FORCE OF 100 NEWTONS.

7. PART ASSEMBLY WEIGHT W/CPA: 3.1 GRAMS; W/O CPA: 3.0 GRAMS

PLUG COLOR	CPA QTY	KEYING ARRANGEMENT (SEE SHEET 2)	PART NUMBER
GREEN	1	"D"	638393-8
BLUE	1	"C"	638393-7
YELLOW	1	"B"	638393-6
BLACK	1	"A"	638393-5
GREEN	N/A	"D"	638393-4
BLUE	N/A	"C"	638393-3
YELLOW	N/A	"B"	638393-2
BLACK	N/A	"A"	638393-1

THIS DRAWING IS A CONTROLLED DOCUMENT FOR TYCO ELECTRONICS CORPORATION. IT IS SUBJECT TO CHANGE AND THE CONTROLLING ENGINEERING ORGANIZATION SHOULD BE CONTACTED FOR THE LATEST REVISION.

DIMENSIONS: mm

TOLERANCES UNLESS OTHERWISE SPECIFIED:
0 PLC ±-
1 PLC ±0.4
2 PLC ±0.30
3 PLC ±-
4 PLC ±-
ANGLES ±-

MATERIAL 3

FINISH -

DWN K.FOLTZ 26AUG99
CHK A. EBRAHEEM 12JAN01
APVD G. BALON 12JAN01
PRODUCT SPEC SAE/USCAR-2 8/97
APPLICATION SPEC -
WEIGHT 7

AMP Incorporated
Harrisburg, PA 17105-3608

NAME PLUG ASSEMBLY, UNSEALED, 10 POSITION 2x5, 0.64mm CONNECTOR -

SIZE	CAGE CODE	DRAWING NO	RESTRICTED TO
A2	00779	C-638393	-

CUSTOMER DRAWING | SCALE 4:1 | SHEET 1 OF 2 | REV A

THIS DRAWING IS UNPUBLISHED. RELEASED FOR PUBLICATION -
© COPYRIGHT 19 BY TYCO ELECTRONICS CORPORATION. ALL RIGHTS RESERVED.

LOC	DIST
FX	00

REVISIONS

P	LTR	DESCRIPTION	DATE	DWN	APVD
	-	SEE SHEET 1	-	-	-

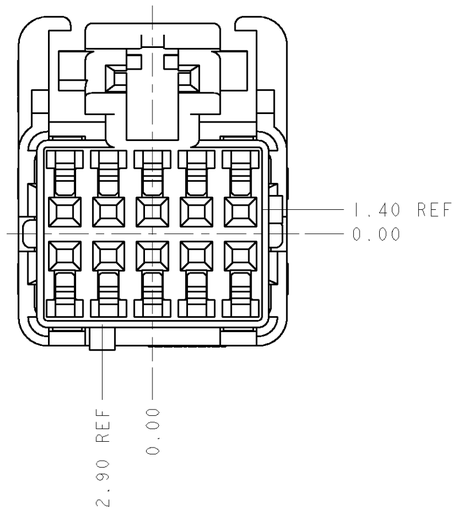

KEY CODE "A"
(APPLIES TO -1 AND -5 ONLY)
SCALE 4:1

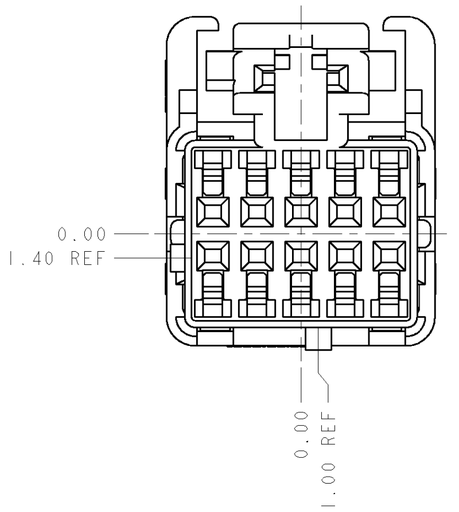

KEY CODE "B"
(APPLIES TO -2 AND -6 ONLY)
SCALE 4:1

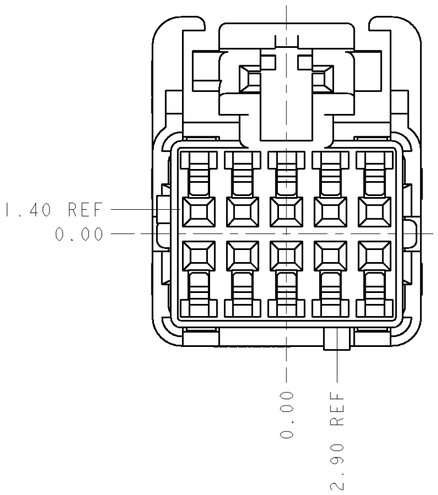

KEY CODE "C"
(APPLIES TO -3 AND -7 ONLY)
SCALE 4:1

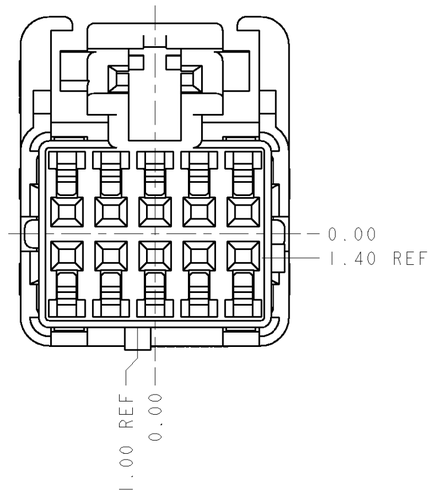

KEY CODE "D"
(APPLIES TO -4 AND -8 ONLY)
SCALE 4:1

THIS DRAWING IS A CONTROLLED DOCUMENT FOR TYCO ELECTRONICS CORPORATION IT IS SUBJECT TO CHANGE AND THE CONTROLLING ENGINEERING ORGANIZATION SHOULD BE CONTACTED FOR THE LATEST REVISION.

DIMENSIONS: mm

TOLERANCES UNLESS OTHERWISE SPECIFIED:
0 PLC ±-
1 PLC ±-
2 PLC ±0.30
3 PLC ±-
4 PLC ±-
ANGLES ±-
FINISH -

MATERIAL -

DWN	K.FOLTZ 26AUG99
CHK	A. EBRAHEEM 12JAN01
APVD	G. BALON 12JAN01
PRODUCT SPEC	-
APPLICATION SPEC	-
WEIGHT	-

AMP Incorporated
Harrisburg, PA 17105-3608

NAME
PLUG ASSEMBLY, UNSEALED,
10 POSITION 2x5, 0.64mm CONNECTOR
-

SIZE	CAGE CODE	DRAWING NO	RESTRICTED TO
A2	00779	C-638393	-

CUSTOMER DRAWING | SCALE 4:1 | SHEET 2 OF 2 | REV A