Technical Specification

PKU 5517VE series DC/DC Converters Input 28 - 60 V, Output up to 8.5 A / 50 W	28701-BMR673 32 revB September 2017 © Flex

Key Features

- Industry standard Sixteenth-brick
  33.02 x 22.86 x 9.40 mm (1.30 x 0.90 x 0.37 in.)
- Input range 28-60 V_{in}
- Maximum 50 Watts total output power
- High efficiency, typ. 90.7 % at 6 V half load
- Pre-biased start up
- 2250 V_{dc} input to output isolation
- Basic insulation according to UL 60950-1
- Surface mount option
- Meets safety requirements according to IEC/EN/UL 60950
- More than 4.9 million hours MTBF

General Characteristics

- Input under voltage lockout
- Over temperature protection
- Output over voltage protection
- Output short circuit protection
- Remote control
- Highly automated manufacturing ensures quality
- ISO 9001/14001 certified supplier

Safety Approvals

Design for Environment

Meets requirements in high-temperature lead-free soldering processes.

Contents

Ordering Information 2
General Information 2
Safety Specification 3
Absolute Maximum Ratings 4

Electrical Specification
6V, 8.5A / 50W PKU 5517VE 5

EMC Specification 9
Operating Information 10
Thermal Consideration 11
Connections 12
Mechanical Information 13
Soldering Information 15
Delivery Information 16
Product Qualification Specification 17

Ordering Information

Product program	Output
PKU 5517VE PI	6 V @ 8.5 A

Product number and Packaging

PKU 5511E $n_1n_2n_3$			
Options	n_1	n_2	n_3
Mounting option	o		
Remote logic		o	
Lead length			o

Options	Description	
n_1	PI	Through hole
	SI	Surface mount
n_2		Negative logic*
	P	Positive logic
n_3		5.33 mm*
	LA	3.69 mm
	LB	4.57 mm
	LC	2.79 mm

* Standard variant (i.e. no option selected).
For example, the through hole version 6V product with short pin is PKU 5517VE PILA.

General Information

Reliability

The failure rate (λ) and mean time between failures (MTBF= 1/λ) is calculated at max output power and an operating ambient temperature (T_A) of +40°C. Flex uses Telcordia SR-332 Issue 2 Method 1 to calculate the mean steady-state failure rate and standard deviation (σ).

Telcordia SR-332 Issue 2 also provides techniques to estimate the upper confidence levels of failure rates based on the mean and standard deviation.

Mean steady-state failure rate, λ	Std. deviation, σ
226 nFailures/h	18.3 nFailures/h

MTBF (mean value) for the PKU-E series = 4.9 Mh.
MTBF at 90% confidence level = 4.4 Mh

Compatibility with RoHS requirements

The products are compatible with the relevant clauses and requirements of the RoHS directive 2002/95/EC and have a maximum concentration value of 0.1% by weight in homogeneous materials for lead, mercury, hexavalent chromium, PBB and PBDE and of 0.01% by weight in homogeneous materials for cadmium.

Exemptions in the RoHS directive utilized in Flex products are found in the Statement of Compliance document.

Flex fulfills and will continuously fulfill all its obligations under regulation (EC) No 1907/2006 concerning the registration, evaluation, authorization and restriction of chemicals (REACH) as they enter into force and is through product materials declarations preparing for the obligations to communicate information on substances in the products.

Quality Statement

The products are designed and manufactured in an industrial environment where quality systems and methods like ISO 9000, Six Sigma, and SPC are intensively in use to boost the continuous improvements strategy. Infant mortality or early failures in the products are screened out and they are subjected to an ATE-based final test. Conservative design rules, design reviews and product qualifications, plus the high competence of an engaged work force, contribute to the high quality of the products.

Warranty

Warranty period and conditions are defined in Flex General Terms and Conditions of Sale.

Limitation of Liability

Flex does not make any other warranties, expressed or implied including any warranty of merchantability or fitness for a particular purpose (including, but not limited to, use in life support applications, where malfunctions of product can cause injury to a person's health or life).

© Flex 2017

The information and specifications in this technical specification is believed to be correct at the time of publication. However, no liability is accepted for inaccuracies, printing errors or for any consequences thereof. Flex reserves the right to change the contents of this technical specification at any time without prior notice.

© Flex

Safety Specification

General information

Flex DC/DC converters and DC/DC regulators are designed in accordance with the safety standards IEC 60950-1, EN 60950-1 and UL 60950-1 *Safety of Information Technology Equipment*.

IEC/EN/UL 60950-1 contains requirements to prevent injury or damage due to the following hazards:

- Electrical shock
- Energy hazards
- Fire
- Mechanical and heat hazards
- Radiation hazards
- Chemical hazards

On-board DC/DC converters, Power interface modules and DC/DC regulators are defined as component power supplies. As components they cannot fully comply with the provisions of any safety requirements without "conditions of acceptability". Clearance between conductors and between conductive parts of the component power supply and conductors on the board in the final product must meet the applicable safety requirements. Certain conditions of acceptability apply for component power supplies with limited stand-off (see Mechanical Information and Safety Certificate for further information). It is the responsibility of the installer to ensure that the final product housing these components complies with the requirements of all applicable safety standards and regulations for the final product.

Component power supplies for general use should comply with the requirements in IEC/EN/UL 60950/1 *Safety of Information Technology Equipment. P*roduct related standards, e.g. IEEE 802.3af *Power over Ethernet*, and ETS-300132-2 *Power interface at the input to telecom equipment, operated by direct current (dc)* are based on IEC/EN/UL 60950-1 with regards to safety.

Flex DC/DC converters, Power interface modules and DC/DC regulators are UL 60950-1 recognized and certified in accordance with EN 60950-1. The flammability rating for all construction parts of the products meet requirements for V-0 class material according to IEC 60695-11-10, *Fire hazard testing, test flames* – 50 W horizontal and vertical flame test methods.

Isolated DC/DC converters

The product may provide basic or functional insulation between input and output according to IEC/EN/UL 60950-1 (see Safety Certificate), different conditions shall be met if the output of a basic or a functional insulated product shall be considered as safety extra low voltage (SELV).

For basic insulated products (see Safety Certificate) the output is considered as safety extra low voltage (SELV) if one of the following conditions is met:

- The input source provides supplementary or double or reinforced insulation from the AC mains according to IEC/EN/UL 60950-1.
- The input source provides functional or basic insulation from the AC mains and the product's output is reliably connected to protective earth according to IEC/EN/UL 60950-1.

For functional insulated products (see Safety Certificate) the output is considered as safety extra low voltage (SELV) if one of the following conditions is met:

- The input source provides double or reinforced insulation from the AC mains according to IEC/EN/UL 60950-1.
- The input source provides basic or supplementary insulation from the AC mains and the product's output is reliably connected to protective earth according to IEC/EN/UL 60950-1.
- The input source is reliably connected to protective earth and provides basic or supplementary insulation according to IEC/EN/UL 60950-1 and the maximum input source voltage is 60 Vdc.

Galvanic isolation between input and output is verified in an electric strength test and the isolation voltage (V_{iso}) meets the voltage strength requirement for basic insulation according to IEC/EN/UL 60950-1.

It is recommended to use a slow blow fuse at the input of each product. If an input filter is used in the circuit the fuse should be placed in front of the input filter. In the rare event of a component problem that imposes a short circuit on the input source, this fuse will provide the following functions:

- Isolate the fault from the input power source so as not to affect the operation of other parts of the system
- Protect the distribution wiring from excessive current and power loss thus preventing hazardous overheating

© Flex

Absolute Maximum Ratings

Characteristics			min	typ	max	Unit
T_{P1}	Operating Temperature (see Thermal Consideration section)		-40		+105	°C
T_S	Storage temperature		-55		+100	°C
V_I	Input voltage		-0.5		+80	V
V_{iso}	Isolation voltage (input to output test voltage)				2250	Vdc
V_{tr}	Input voltage transient (tp 100ms)				100	V
V_{RC}	Remote Control pin voltage (see Operating Information section)	Positive logic option	-0.5		7	V
		Negative logic option	-0.5		7	V
V_{adj}	Adjust pin voltage (see Operating Information section)		-0.5		5	V

Stress in excess of Absolute Maximum Ratings may cause permanent damage. Absolute Maximum Ratings, sometimes referred to as no destruction limits, are normally tested with one parameter at a time exceeding the limits in the Electrical Specification. If exposed to stress above these limits, function and performance may degrade in an unspecified manner.

Fundamental Circuit Diagram

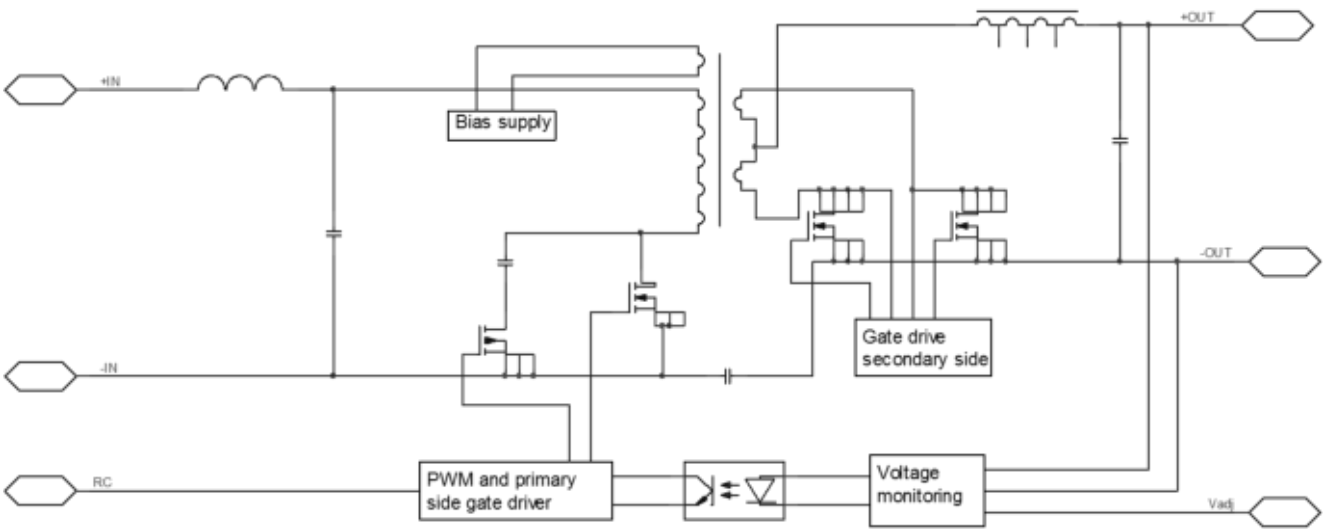

© Flex

Electrical Specification
6 V, 8.5 A / 50 W

PKU 5517VE SI

T_{P1} = -40 to +90ºC, V_I = 28 to 60 V, unless otherwise specified under Conditions.
Typical values given at: T_{P1} = +25°C, V_I= 53V, max I_O, unless otherwise specified under Conditions.
Additional C_{in} = 100 µF. C_{out} = 330 µF

Characteristics		Conditions	min	typ	max	Unit
V_I	Input voltage range		28		60	V
V_{Ioff}	Turn-off input voltage	Decreasing input voltage	23	24	25	V
V_{Ion}	Turn-on input voltage	Increasing input voltage	25	26	27	V
C_I	Internal input capacitance			6.6		µF
P_O	Output power		0		50	W
η	Efficiency	50% of max I_O, V_i=48V		90.7		%
		max I_O, V_i=48V		91.5		
		50% of max I_O, V_I = 53 V		90		
		max I_O, V_I = 53 V		91.2		
P_d	Power Dissipation	max I_O		4.9	6	W
P_{li}	Input idling power	I_O = 0 A, V_I = 53 V		1.6		W
P_{RC}	Input standby power	V_I = 53 V (turned off with RC)		0.41		W
f_s	Switching frequency	0-100 % of max I_O	280	315	350	kHz

V_{Oi}	Output voltage initial setting and accuracy	T_{P1} = +25°C, V_I = 53 V, I_O = 8.5 A	5.95	6.05	6.15	V
V_O	Output adjust range	See operating information	5.5		6.5	V
	Output voltage tolerance band	10-100% of max I_O	5.9		6.2	V
	Idling voltage	I_O = 0 A	5.95		6.15	V
	Line regulation	max I_O		±5	±25	mV
	Load regulation	V_I = 53 V, 0-100% of max I_O		±10	±25	mV
V_{tr}	Load transient voltage deviation	V_I = 53 V, Load step 25-75-25% of max I_O, di/dt = 1 A/µs see Note 1		±300	±500	mV
t_{tr}	Load transient recovery time			250	400	µs
t_r	Ramp-up time (from 10−90% of V_{Oi})	10-100% of max I_O	3	5	10	ms
t_s	Start-up time (from V_I connection to 90% of V_{Oi})		4	7	15	ms
t_f	V_I shut-down fall time (from V_I off to 10% of V_O)	max I_O		2.2		ms
		I_O = 0 A		5.4		S
t_{RC}	RC start-up time	max I_O		115		ms
	RC shut-down fall time (from RC off to 10% of V_O)	max I_O		0.1		ms
		I_O = 0 A		6.2		S
I_O	Output current		0		8.5	A
I_{lim}	Current limit threshold	T_{P1} < max T_{P1}		13.5	20	A
I_{sc}	Short circuit current	T_{P1} = 25ºC, see Note 2		8	15	A
C_{out}	Recommended Capacitive Load	T_{P1} = 25ºC,	330		5000	µF
V_{Oac}	Output ripple & noise	See ripple & noise section, V_{Oi}		25	60	mVp-p
OVP	Over voltage protection	T_{P1} = +25°C, V_I = 53 V, 0-100% of max I_O		7.4	7.6	V
RC	Sink current, see Note 3	See operating information	0.5			mA
	Trigger level	See operating information	1			V

Note 1: 1000uF OS-CON cap used at load transient test

Note 2: Hiccup mode OCP, RMS value

Note 3: Sink current drawn by external device connected to the RC pin. Minimum sink current required to guarantee activated RC function.

© Flex

Typical Characteristics
6 V, 8.5 A / 50 W

PKU 5517VE SI

Efficiency

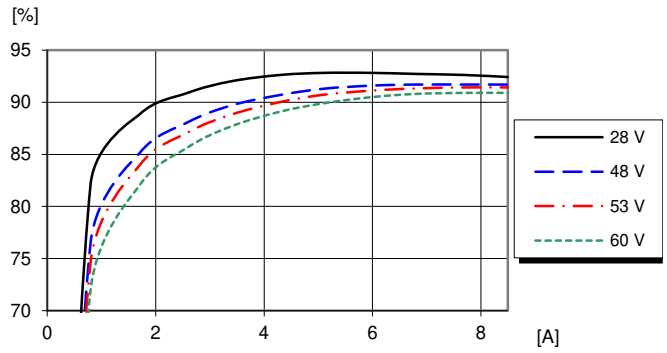

Efficiency vs. load current and input voltage at T_{P1} = +25°C.

Power Dissipation

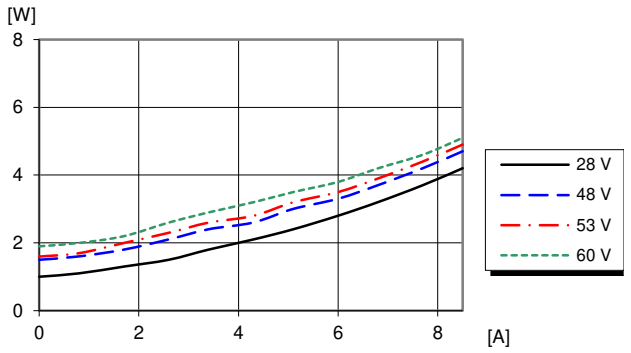

Dissipated power vs. load current and input voltage at T_{P1} = +25°C.

Output Characteristics

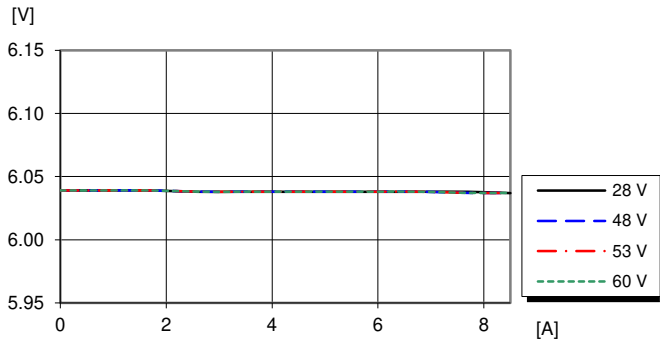

Output voltage vs. load current at T_{P1} = +25°C.

Current Limit Characteristics

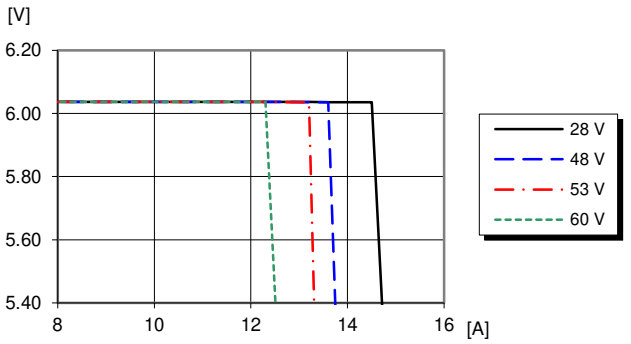

Output voltage vs. load current at I_O > max I_O , T_{P1} = +25°C.

© Flex

Typical Characteristics
6 V, 8.5 A / 50 W

PKU 5517VE SI

Start-up

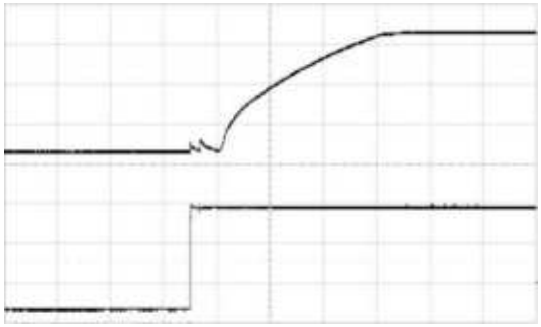

Start-up enabled by connecting V_I at:
T_{P1} = +25°C, V_I = 53 V,
I_O = 8.5 A resistive load.

Top trace: output voltage (2 V/div).
Bottom trace: input voltage (20 V/div).
Time scale: (2 ms/div).

Shut-down

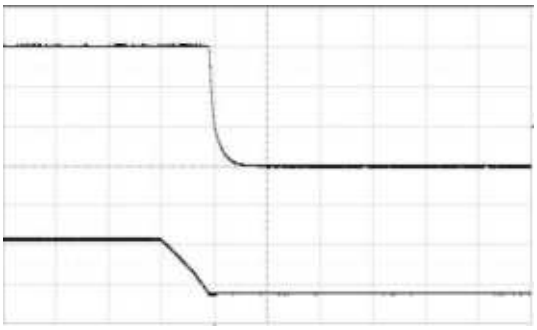

Shut-down enabled by disconnecting V_I at:
T_{P1} = +25°C, V_I = 53 V,
I_O = 8.5 A resistive load.

Top trace: output voltage (2 V/div).
Bottom trace: input voltage (20 V/div).
Time scale: (2 ms/div).

Output Ripple & Noise

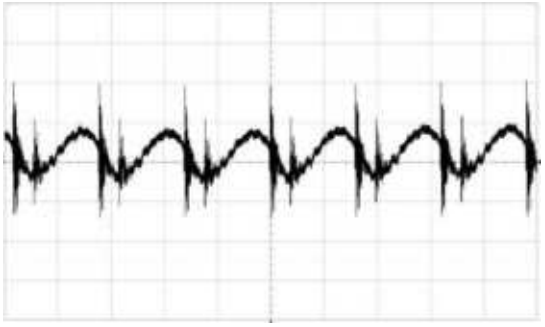

Output voltage ripple at:
T_{P1} = +25°C, V_I = 53 V,
I_O = 8.5 A resistive load.

Trace: output voltage (5 mV/div).
Time scale: (2 µs/div.).

Output Load Transient Response

Output voltage response to load current step-change (2.1-6.4-2.1A) at:
T_{P1} =+25°C, V_I = 53 V

Top trace: output voltage (200 mV/div).
Bottom trace: load current (2 A/div).
Time scale: (0.5 ms/div).

Passive adjust
The resistor value for an adjusted output voltage is calculated by using the following equations:

Output Voltage Adjust, Decrease:

$$Radj = \left(\frac{511}{\Delta\%} - 10.22\right) \text{ k}\Omega$$

Output Voltage Adjust, Increase:

$$Radj = \left(\frac{5.11 \times 6.0(100 + \Delta\%)}{1.225 \times \Delta\%} - \frac{511}{\Delta\%} - 10.22\right) \text{ k}\Omega$$

Example: Increase 4% => V_o = 6.24 Vdc

$$\left(\frac{5.11 \times 6.0(100 + 4)}{1.225 \times 4} - \frac{511}{4} - 10.22\right) \text{ k}\Omega = 512 \text{ k}\Omega$$

Active adjust
The output voltage may be adjusted using a voltage applied to the Vadj pin. This voltage is calculated by using the following equation:

$$V_{adj} = \left(1.225 + 2.45 \times \frac{Vdesired - 6.0}{6.0}\right) \text{V}$$

Example: Increase *Vdesired = 6.24* V

$$\left(1.225 + 2.45 \times \frac{6.24 - 6.0}{6.0}\right) \text{V} = 1.323 \text{ V}$$

© Flex

Typical Characteristics
6 V, 8.5 A / 50 W

PKU 5517VE SI

Output Current Derating, Vin=53V, see Note 1

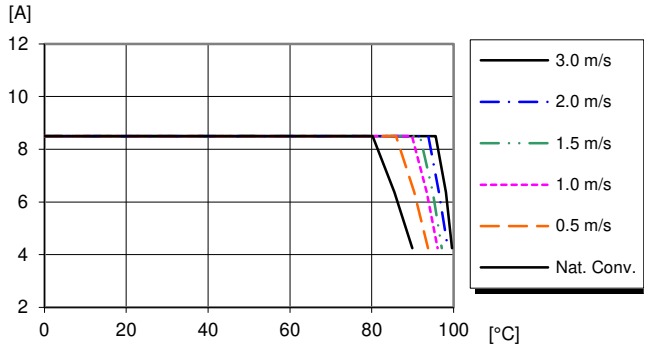

Available load current vs. ambient air temperature and airflow at V_I = 53 V. See Thermal Consideration section.

Note 1: Test is done on a 254 x 254 mm, 35 µm (1 oz),8-layer test board

© Flex

EMC Specification

Conducted EMI measured according to EN55022, CISPR 22 and FCC part 15J (see test set-up). See Design Note 009 for further information. The fundamental switching frequency is 315 kHz for PKU 5517VE at V_I = 48 V and max I_O.

Conducted EMI Input terminal value (typ)

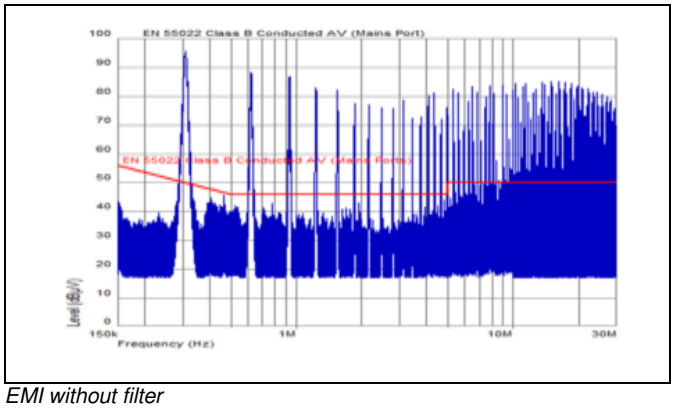

EMI without filter

Optional external filter for class B

Suggested external input filter in order to meet class B in EN 55022, CISPR 22 and FCC part 15J.

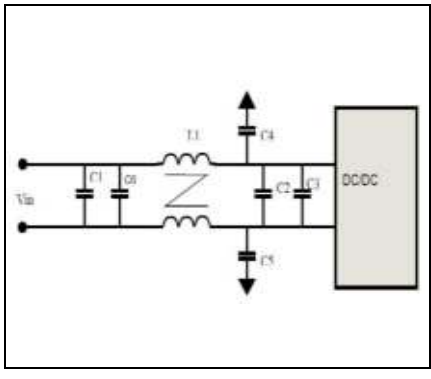

Filter components:
C1,2 = 2.2 µF (ceramic cap)
C3 = 220 µF (electrolytic cap)
C6 = 100 uF (electrolytic cap)
C4,5 = 2.2 nF,2KV (ceramic cap)
L1 = 1.32 mH (Pulse P0420)

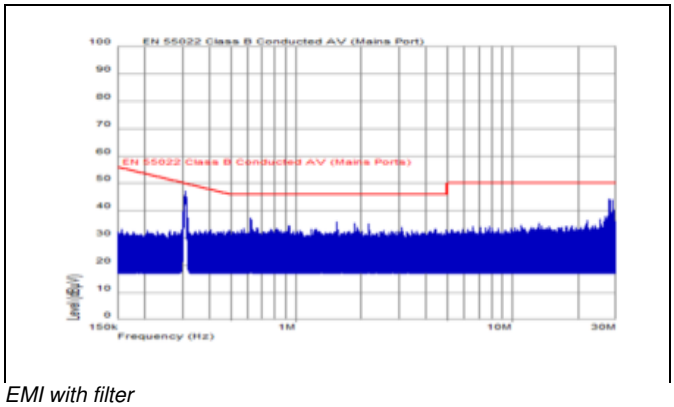

EMI with filter

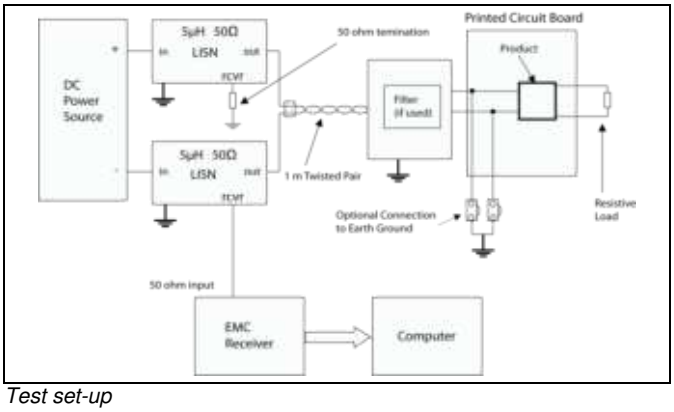

Test set-up

Layout recommendations

The radiated EMI performance of the product will depend on the PWB layout and ground layer design. It is also important to consider the stand-off of the product. If a ground layer is used, it should be connected to the output of the product and the equipment ground or chassis.

A ground layer will increase the stray capacitance in the PWB and improve the high frequency EMC performance.

Output ripple and noise

Output ripple and noise measured according to figure below. See Design Note 022 for detailed information.

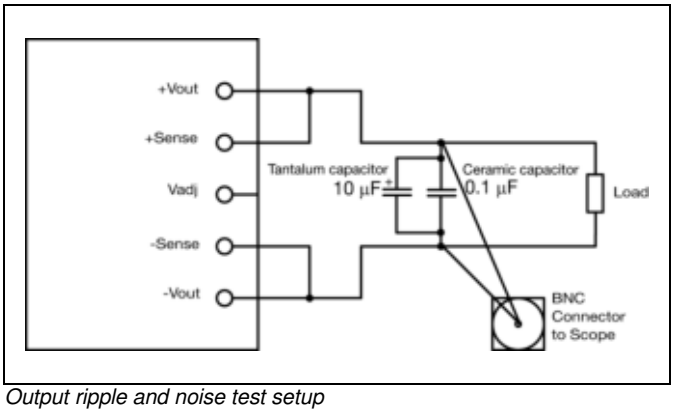

Output ripple and noise test setup

© Flex

Operating information

Input Voltage

The input voltage range 28 to 60 Vdc meets the requirements of the European Telecom Standard ETS 300 132-2 for normal input voltage range in –48 Vdc systems, -40.5 to -57.0 V.
At input voltages exceeding 60 V, the power loss will be higher than at normal input voltage and T_{P1} must be limited to absolute max +105°C. The absolute maximum continuous input voltage is 80 Vdc.

Short duration transient disturbances can occur on the DC distribution and input of the product when a short circuit fault occurs on the equipment side of a protective device (fuse or circuit breaker). The voltage level, duration and energy of the disturbance are dependant on the particular DC distribution network characteristics and can be sufficient to damage the product unless measures are taken to suppress or absorb this energy. The transient voltage can be limited by capacitors and other energy absorbing devices like zener diodes connected across the positive and negative input conductors at a number of strategic points in the distribution network. The end-user must secure that the transient voltage will not exceed the value stated in the Absolute maximum ratings. ETSI TR 100 283 examines the parameters of DC distribution networks and provides guidelines for controlling the transient and reduce its harmful effect.

Turn-off Input Voltage

The products monitor the input voltage and will turn on and turn off at predetermined levels.
The minimum hysteresis between turn on and turn off input voltage is 1 V. The input voltage supply must have low impedance to prevent the risk of input oscillation, poor supply can also cause shutdown-bouncing.

Remote Control (RC)

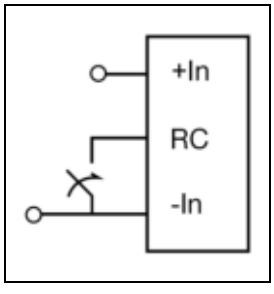

The products are fitted with a remote control function referenced to the primary negative input connection (-In), with negative and positive logic options available. The RC function allows the product to be turned on/off by an external device like a semiconductor or mechanical switch. The RC pin has an internal pull up resistor to +In.

The external device must provide a minimum required sink current to guarantee a voltage not higher than maximum voltage on the RC pin (see Electrical characteristics table). When the RC pin is left open, the voltage generated on the RC pin is 4.5 – 5.5 V.

The standard product is provided with “negative logic” RC and will be off until the RC pin is connected to the -In. To turn off the product the RC pin should be left open, or connected to a voltage higher than 4 V referenced to -In. In situations where it is desired to have the product to power up automatically without the need for control signals or a switch, the RC pin can be wired directly to -In.

The second option is “positive logic” remote control, which can be ordered by adding the suffix “P” to the end of the part number. When the RC pin is left open, the product starts up automatically when the input voltage is applied. Turn off is achieved by connecting the RC pin to the -In. The product will restart automatically when this connection is opened.

See Design Note 021 for detailed information.

Input and Output Impedance

The impedance of both the input source and the load will interact with the impedance of the DC/DC converter. It is important that the input source has low characteristic impedance.

The performance in some applications can be enhanced by addition of external capacitance as described in External Decoupling Capacitors.

If the input voltage source contains significant inductance, the addition of a low ESR 100 µF capacitor across the input of the converter will ensure stable operation in all conditions.

External Decoupling Capacitors

The products have been designed to operate with a minimum capacitance connected to their output.

When powering loads with significant dynamic current requirements, the voltage regulation at the point of load can be improved by addition of decoupling capacitors at the load. The most effective technique is to locate low ESR ceramic and electrolytic capacitors as close to the load as possible, using several parallel capacitors to lower the effective ESR. The ceramic capacitors will handle high-frequency dynamic load changes while the electrolytic capacitors are used to handle low frequency dynamic load changes. It is equally important to use low resistance and low inductance PWB layouts and cabling.

External decoupling capacitors will become part of the product’s control loop. The control loop is optimized for a wide range of external capacitance and the maximum recommended value that could be used without any additional analysis is found in the Electrical specification.

	Minimum Input Capacitance	Minimum Output Capacitance
PKU 5517VE	100uF	330uF

Minimum capacitance

For further information please contact your local Flex Power Modules representative.

© Flex

Output Voltage Adjust (V_{adj})

The products have an Output Voltage Adjust pin (V_{adj}). This pin can be used to adjust the output voltage above or below Output voltage initial setting.
When increasing the output voltage, the voltage at the output pins must be kept below the threshold of the over voltage protection, (OVP) to prevent the product from shutting down. At increased output voltages the maximum power rating of the product remains the same, and the max output current must be decreased correspondingly.
To increase the voltage the resistor should be connected between the V_{adj} pin and +out pin. The resistor value of the Output voltage adjust function is according to information given under the Output section for the respective product.
To decrease the output voltage, the resistor should be connected between the V_{adj} pin and –out pin.

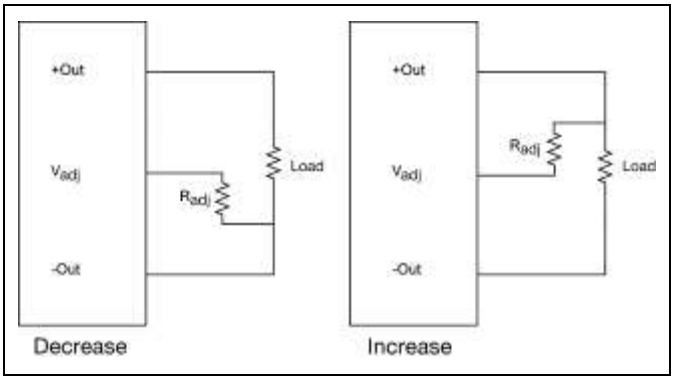

Over Temperature Protection (OTP)

The products are protected from thermal overload by an internal over temperature shutdown circuit.
When T_{P1} as defined in thermal consideration section exceeds 115°C the product will shut down. The product will make continuous attempts to start up (non-latching mode) and resume normal operation automatically when the temperature has dropped >10°C below the temperature threshold.

Over Voltage Protection (OVP)

The products have output over voltage protection that will shut down the product in over voltage conditions. The product will make continuous attempts to start up (non-latching mode) and resume normal operation automatically after removal of the over voltage condition.

Over Current Protection (OCP)

The products include current limiting circuitry for protection at continuous overload. The output voltage will decrease towards zero for output currents in excess of max output current (max I_O). After a time period exceeding 10 ms in OCP converters will enter hiccupmode to reduce average output power. The product will resume normal operation after removal of the overload. The load distribution should be designed for the maximum output short circuit current specified.

Pre-bias Start-up

The product has a Pre-bias start up functionality. With the slew rate of input voltage less than 10V/ms, the product will not sink current during start up if a pre-bias source with less than 75% of V_o is present at the output terminals.

Thermal Consideration

General

The products are designed to operate in different thermal environments and sufficient cooling must be provided to ensure reliable operation.

For products mounted on a PWB without a heat sink attached, cooling is achieved mainly by conduction, from the pins to the host board, and convection, which is dependant on the airflow across the product. Increased airflow enhances the cooling of the product. The Output Current Derating graph found in the Output section for each model provides the available output current vs. ambient air temperature and air velocity at V_I = 53 V.

The product is tested on a 254 x 254 mm, 35 µm (1 oz), 8-layer test board mounted vertically in a wind tunnel with a cross-section of 608 x 203 mm.

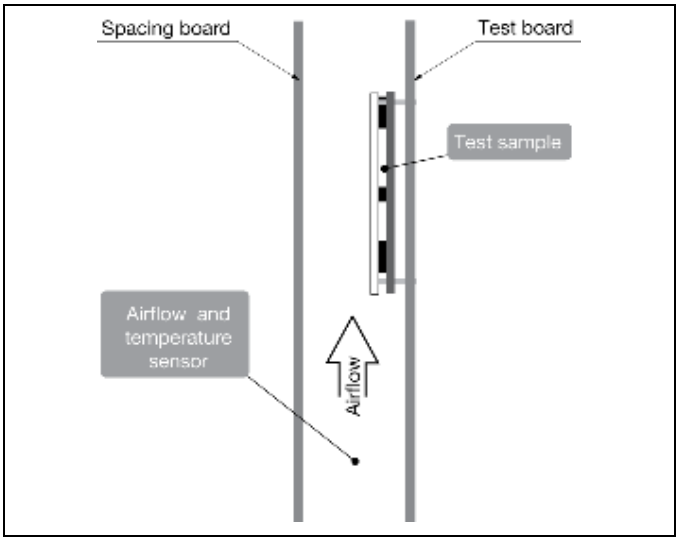

Definition of product operating temperature

The product operating temperatures is used to monitor the temperature of the product, and proper thermal conditions can be verified by measuring the temperature at positions P1. The temperature at position T_{P1} should not exceed the maximum temperatures in the table below. The number of measurement points may vary with different thermal design and topology. Temperatures above maximum T_{P1}, measured at the reference

© Flex

point P1 are not allowed and may cause permanent damage.

Position	Description	Max Temp.
P1	Opto coupler	T_{P1}=105º C

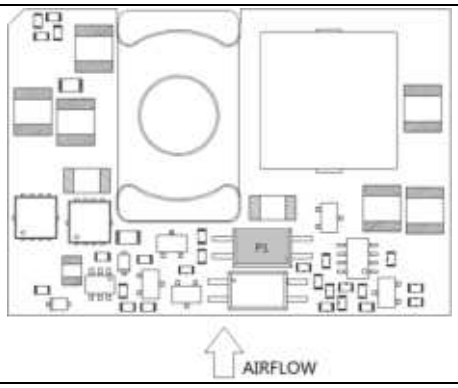

Open frame

Connections

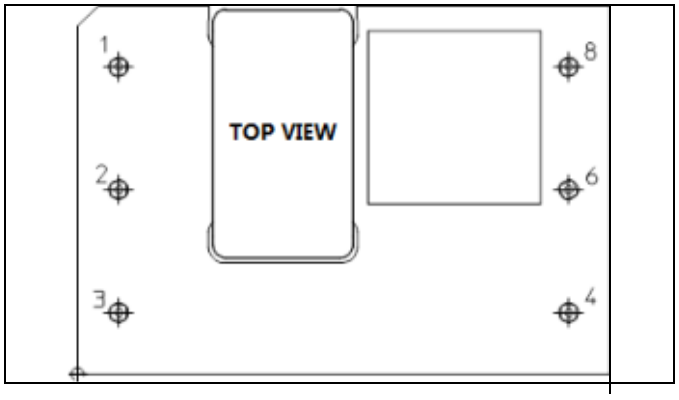

Pin	Designation	Function
1	+In	Positive Input
2	RC	Remote control
3	-In	Negative Input
4	-Out	Negative Output
6	Vadj	Output voltage adjust
8	+Out	Positive Output

Mechanical Information - Hole Mount, Open Frame Version

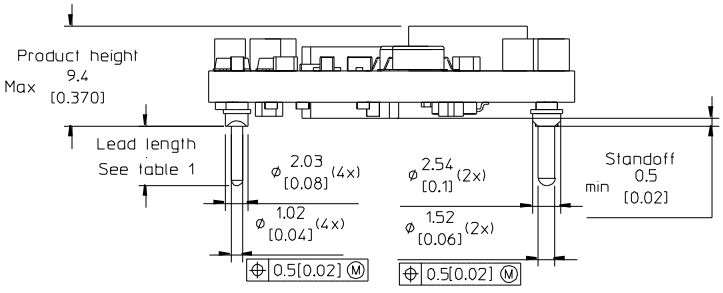

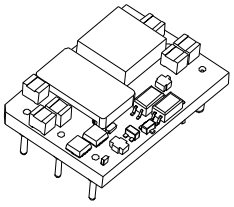

TOP VIEW

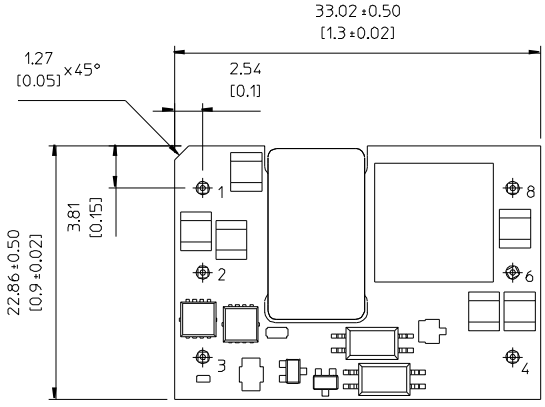

RECOMMENDED FOOTPRINT - TOP VIEW

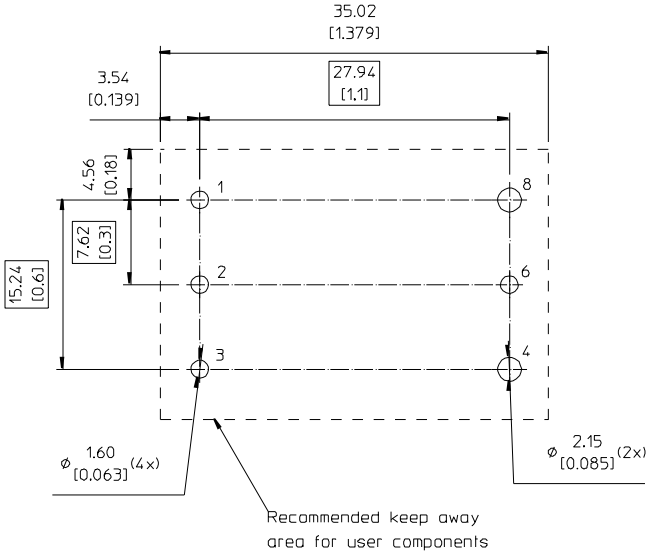

Table 1

Pin option	Lead length
Standard	5.33 [0.210]
LA	3.69 [0.145]
LB	4.57 [0.180]
LC	2.79 [0.110]

Notes:
Pin material: Copper alloy
Plating: 0.1 µm Gold over 2µm Nickel

Weight: typical 14.3 g
All dimensions in mm [inch].
Tolerances unless specified
x.x mm ±0.5mm [0.02], x.xx mm ±0.25 mm [0.01]
(not applied on footprint or typical values)

Mechanical Information - Surface Mount Version

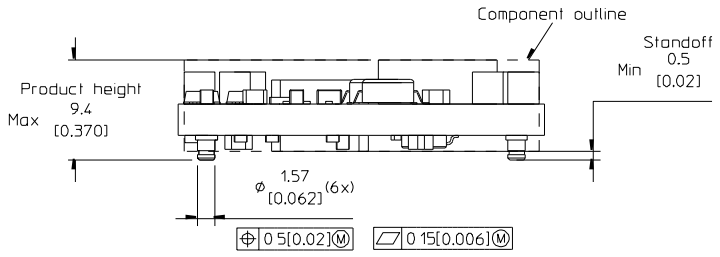

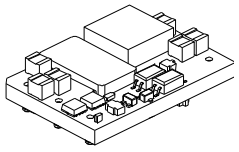

TOP VIEW

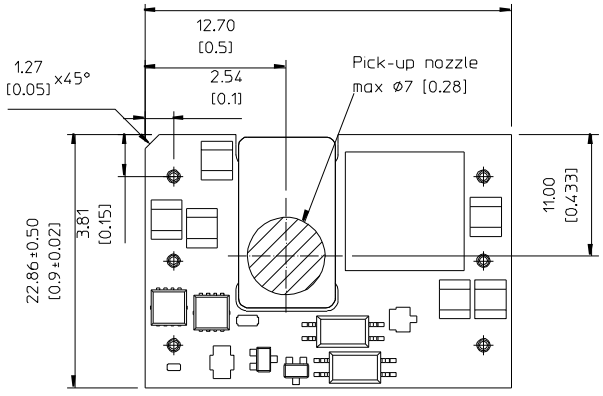

RECOMMENDED FOOTPRINT - TOP VIEW

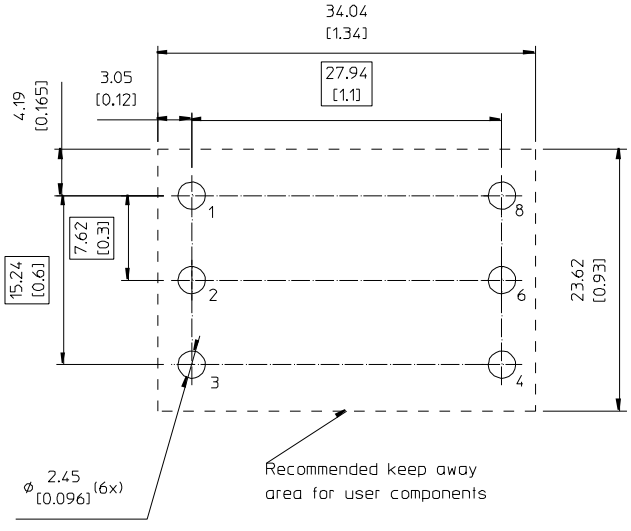

Layout considerations:
Use sufficient numbers of vias connected to output pin pad for proper thermal and current conductivity.

Pins:
Pin material: Copper alloy
Plating: 0.1 μm Gold over 2μm Nickel

Weight: typical 12.5 g
All dimensions in mm [inch].
Tolerances unless specified
x.x mm ±0.5 mm [0.02], x.xx mm ±0.25 mm [0.01]
(not applied on footprint or typical values)

© Flex

Soldering Information - Surface Mounting and Hole Mount through Pin in Paste Assembly

The surface mount product is intended for forced convection or vapor phase reflow soldering in SnPb or Pb-free processes.

The reflow profile should be optimised to avoid excessive heating of the product. It is recommended to have a sufficiently extended preheat time to ensure an even temperature across the host PWB and it is also recommended to minimize the time in reflow.

A no-clean flux is recommended to avoid entrapment of cleaning fluids in cavities inside the product or between the product and the host board, since cleaning residues may affect long time reliability and isolation voltage.

General reflow process specifications		SnPb eutectic	Pb-free
Average ramp-up ($T_{PRODUCT}$)		3°C/s max	3°C/s max
Typical solder melting (liquidus) temperature	T_L	183°C	221°C
Minimum reflow time above T_L		60 s	60 s
Minimum pin temperature	T_{PIN}	210°C	235°C
Peak product temperature	$T_{PRODUCT}$	225°C	260°C
Average ramp-down ($T_{PRODUCT}$)		6°C/s max	6°C/s max
Maximum time 25°C to peak		6 minutes	8 minutes

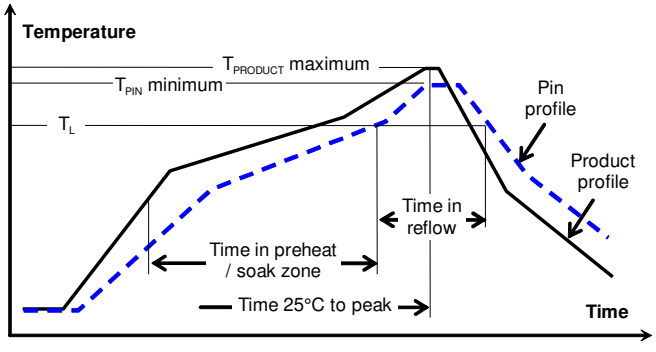

Minimum Pin Temperature Recommendations

Pin number 8 is chosen as reference location for the minimum pin temperature recommendation since this will likely be the coolest solder joint during the reflow process.

SnPb solder processes

For SnPb solder processes, a pin temperature (T_{PIN}) in excess of the solder melting temperature, (T_L, 183°C for Sn63Pb37) for more than 60 seconds and a peak temperature of 220°C is recommended to ensure a reliable solder joint.

For dry packed products only: depending on the type of solder paste and flux system used on the host board, up to a recommended maximum temperature of 245°C could be used, if the products are kept in a controlled environment (dry pack handling and storage) prior to assembly.

Lead-free (Pb-free) solder processes

For Pb-free solder processes, a pin temperature (T_{PIN}) in excess of the solder melting temperature (T_L, 217 to 221°C for SnAgCu solder alloys) for more than 60 seconds and a peak temperature of 245°C on all solder joints is recommended to ensure a reliable solder joint.

Maximum Product Temperature Requirements

Top of the product PWB near pin 2 is chosen as reference location for the maximum (peak) allowed product temperature ($T_{PRODUCT}$) since this will likely be the warmest part of the product during the reflow process.

SnPb solder processes

For SnPb solder processes, the product is qualified for MSL 1 according to IPC/JEDEC standard J-STD-020C.

During reflow $T_{PRODUCT}$ must not exceed 225 °C at any time.

Pb-free solder processes

For Pb-free solder processes, the product is qualified for MSL 3 according to IPC/JEDEC standard J-STD-020C.

During reflow $T_{PRODUCT}$ must not exceed 260 °C at any time.

Dry Pack Information

Products intended for Pb-free reflow soldering processes are delivered in standard moisture barrier bags according to IPC/JEDEC standard J-STD-033 (Handling, packing, shipping and use of moisture/reflow sensitivity surface mount devices).

Using products in high temperature Pb-free soldering processes requires dry pack storage and handling. In case the products have been stored in an uncontrolled environment and no longer can be considered dry, the modules must be baked according to J-STD-033.

Thermocoupler Attachment

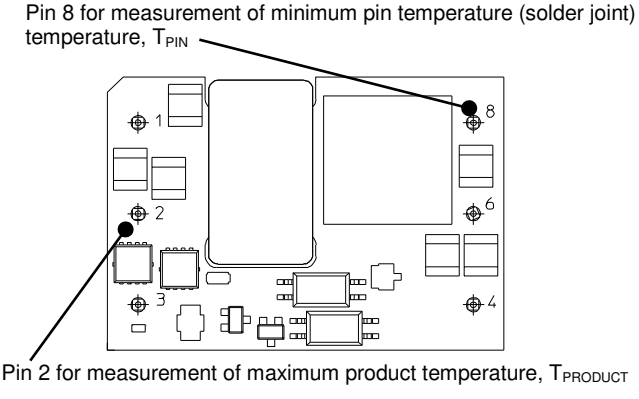

© Flex

Soldering Information - Hole Mounting

The hole mounted product is intended for plated through hole mounting by wave or manual soldering. The pin temperature is specified to maximum to 270°C for maximum 10 seconds.

A maximum preheat rate of 4°C/s and maximum preheat temperature of 150°C is suggested. When soldering by hand, care should be taken to avoid direct contact between the hot soldering iron tip and the pins for more than a few seconds in order to prevent overheating.

A no-clean flux is recommended to avoid entrapment of cleaning fluids in cavities inside the product or between the product and the host board. The cleaning residues may affect long time reliability and isolation voltage.

Delivery Package Information

The surface mounted products are delivered in antistatic injection molded trays (Jedec design guide 4.10D standard) and in antistatic carrier tape (EIA 481 standard).
The through-hole mounted products are delivered in antistatic injection molded trays (Jedec design guide 4.10D standard).

Carrier Tape Specifications	
Material	Antistatic PS
Surface resistance	10^5 < Ohm/square < 10^{11}
Bakeability	The tape is not bakable
Tape width, W	56 mm [2.2 inch]
Pocket pitch, P_1	36 mm [1.42 inch]
Pocket depth, K_0	9.7 mm [0.382 inch]
Reel diameter	380 mm [15 inch]
Reel capacity	170 products /reel
Reel weight	Rounded 2.5 kg/full reel

EIA standard carrier tape

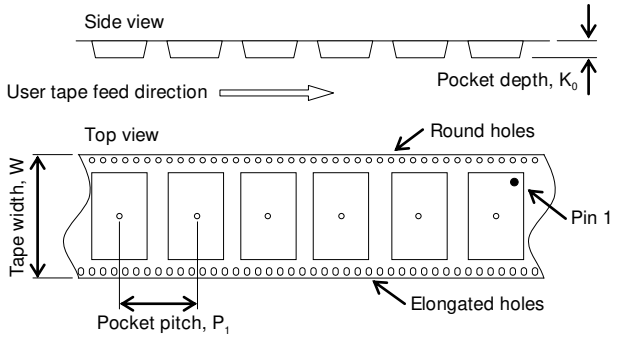

Tray Specifications	
Material	Antistatic PPE
Surface resistance	10^5 < Ohm/square < 10^{11}
Bakability	The trays can be baked at maximum [125°C for 48 hours]
Tray thickness	18.5 mm [0.728 inch]
Box capacity	150 products (5 full trays/box)
Tray weight	190 g empty, 620 g full tray

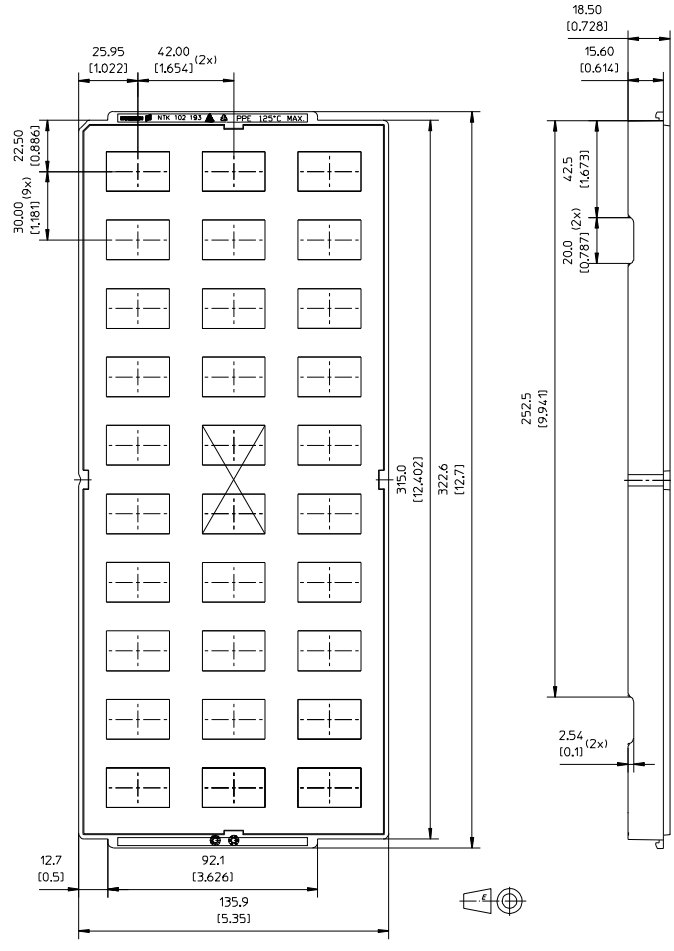

X= Vacuum pickup area
All dimensions in mm [inch]
Tolerances:
X.xx mm ±0.13 mm [0.005], X.x mm ±0.26 mm [0.01]
Note: Tray dimensions refer to pocket center. For exact location of product pick up surface, refer to mechanical drawing.

© Flex

Product Qualification Specification

Characteristics			
External visual inspection	IPC-A-610		
Change of temperature (Temperature cycling)	IEC 60068-2-14 Na	Temperature range Number of cycles Dwell/transfer time	-40 to 100°C 1000 15 min/0-1 min
Cold (in operation)	IEC 60068-2-1 Ad	Temperature T_A Duration	-45°C 72 h
Damp heat	IEC 60068-2-67 Cy	Temperature Humidity Duration	85°C 85 % RH 1000 hours
Dry heat	IEC 60068-2-2 Bd	Temperature Duration	125°C 1000 h
Electrostatic discharge susceptibility	IEC 61340-3-1, JESD 22-A114 IEC 61340-3-2, JESD 22-A115	Human body model (HBM) Machine Model (MM)	Class 2, 2000 V Class 3, 200 V
Immersion in cleaning solvents	IEC 60068-2-45 XA, method 2	Water Glycol ether Isopropyl alcohol	55°C 35°C 35°C
Mechanical shock	IEC 60068-2-27 Ea	Peak acceleration Duration	100 g 6 ms
Moisture reflow sensitivity [1]	J-STD-020C	Level 1 (SnPb-eutectic) Level 3 (Pb Free)	225°C 260°C
Operational life test	MIL-STD-202G, method 108A	Duration	1000 h
Resistance to soldering heat [2]	IEC 60068-2-20 Tb, method 1A	Solder temperature Duration	270°C 10-13 s
Robustness of terminations	IEC 60068-2-21 Test Ua1 IEC 60068-2-21 Test Ue1	Through hole mount products Surface mount products	All leads All leads
Solderability	IEC 60068-2-58 test Td [1] IEC 60068-2-20 test Ta [2]	Preconditioning Temperature, SnPb Eutectic Temperature, Pb-free Preconditioning Temperature, SnPb Eutectic Temperature, Pb-free	150°C dry bake 16 h 215°C 235°C Steam ageing 235°C 245°C
Vibration, broad band random	IEC 60068-2-64 Fh, method 1	Frequency Spectral density Duration	10 to 500 Hz 0.07 g^2/Hz 10 min in each direction

Notes
[1] Only for products intended for reflow soldering (surface mount products)
[2] Only for products intended for wave soldering (plated through hole products)